CHAPTER 98

WIRING DIAGRAMS

Figure	*Title*	*Page*
98-1	R66 Electrical System (F024-2 Revision X)	98.1
98-1A	R66 Electrical System (F024-2 Revision V)	98.2
98-2A	R66 Electrical System (F024-2 Revision R)	98.2A
98-2B	R66 Electrical System (F024-1 Revision J)	98.2B
98-3	Air Conditioning Installation	98.3
98-4	ADF Installation	98.5
98-5	Standard Audio Installation (NAT AA12S-600 Audio Control)	98.7
98-6	Dual Audio Control Installation	98.9
98-7	PA/Siren Installation	98.11
98-8A	Garmin Flight Control System (FCS) Installation	98.13
98-8B	HeliSAS – Autopilot Installation	98.13B
98-8C	HeliSAS – Autopilot Installation	98.14
98-9	Garmin GDU 700L or 1060 Installation (F817 Revision R)	98.15
98-9A	Garmin GDU 700L or 1060 Installation (F817 Revision J)	98.15A
98-9B	Garmin GDU 620 Installation	98.15B
98-10	Garmin GSU 75 ADAHRS Installation	98.17
98-10A	Garmin GSU 75H ADAHRS Installation	98.17B
98-11	Garmin GDC 74H Air Data Computer Installation	98.19
98-12	Garmin GRS 77H AHRS Installation	98.21
98-12A	Garmin GTN 6XX/7XX-series GPS Installation (F818 Revision O)	98.23
98-13	Garmin GTN 6XX/7XX-series GPS Installation (F818 Revision D)	98.24
98-13A	Avidyne IFD 4XX/5XX-series GPS Installation	98.24A
98-13B	Garmin 500 Series GPS Installation	98.24C
98-13C	Garmin 500 Series GPS Installation	98.24D
98-14	RA-4500 Radar Altimeter Installation	98.25
98-14A	RA-4000 Radar Altimeter Installation	98.25A
98-14B	GRA 55 Radar Altimeter Installation	98.25B
98-15	Garmin GTX 345R Transponder Installation	98.26
98-15A	Garmin GTX 3X5 Transponder Installation (C804 Revision AE)	98.27
98-15B	Garmin GTX 3X5 Transponder Installation (C804 Revision AA)	98.28
98-16	Garmin GTX 33/328/330 ES Transponder Installation	98.29
98-17	Garmin GDL 69A XM Receiver Installation	98.31
98-18	Aspen EFD1000H Display Installation	98.33
98-19	Aspen EFD500H Display Installation	98.35

CHAPTER 98

WIRING DIAGRAMS (continued)

Figure	*Title*	*Page*
98-20	Garmin GTR 205 / GNC 215 NAV/COM Radio Installation	98.37
98-20A	Garmin GTR 225B COM / GNC 225B NAV/COM Radio Installation	98.38
98-21	Garmin GTR 225B COM Radio Installation	98.39
98-22	Garmin GDL 88 ADS-B In Receiver Installation	98.41
98-23	Garmin GTN 6XX/7XX-series GPS Installation (Pilot-Side Console)	98.43
98-24	F060 Intercom System Installation (Garmin GMA 350HC Audio Control)	98.45
98-25A	F060-4, -5, -6 & -7 Intercom System Installation (Garmin GMA 350HC Audio Control)	98.45B
98-25B	F060-1 & -2 Intercom System Installation (Garmin GMA 350H Audio Control)	98.46
98-26	Lithium-Ion Battery Installation	98.47
98-27	Heated Seats Installation	98.51
98-28	Cargo Hook Installation	98.53
98-29	External Load Controls	98.55
98-30	Copilot Instruments Installation	98.57
98-31	Bubble Door Fans Installation	98.59
98-32	Dual Low Fuel Warning Light Installation	98.61
98-33	Fuel Flow Meter Installation	98.61
98-34	Pressure Fueling System Installation	98.63

FIGURE 98-1 R66 ELECTRICAL SYSTEM (REVISION X)

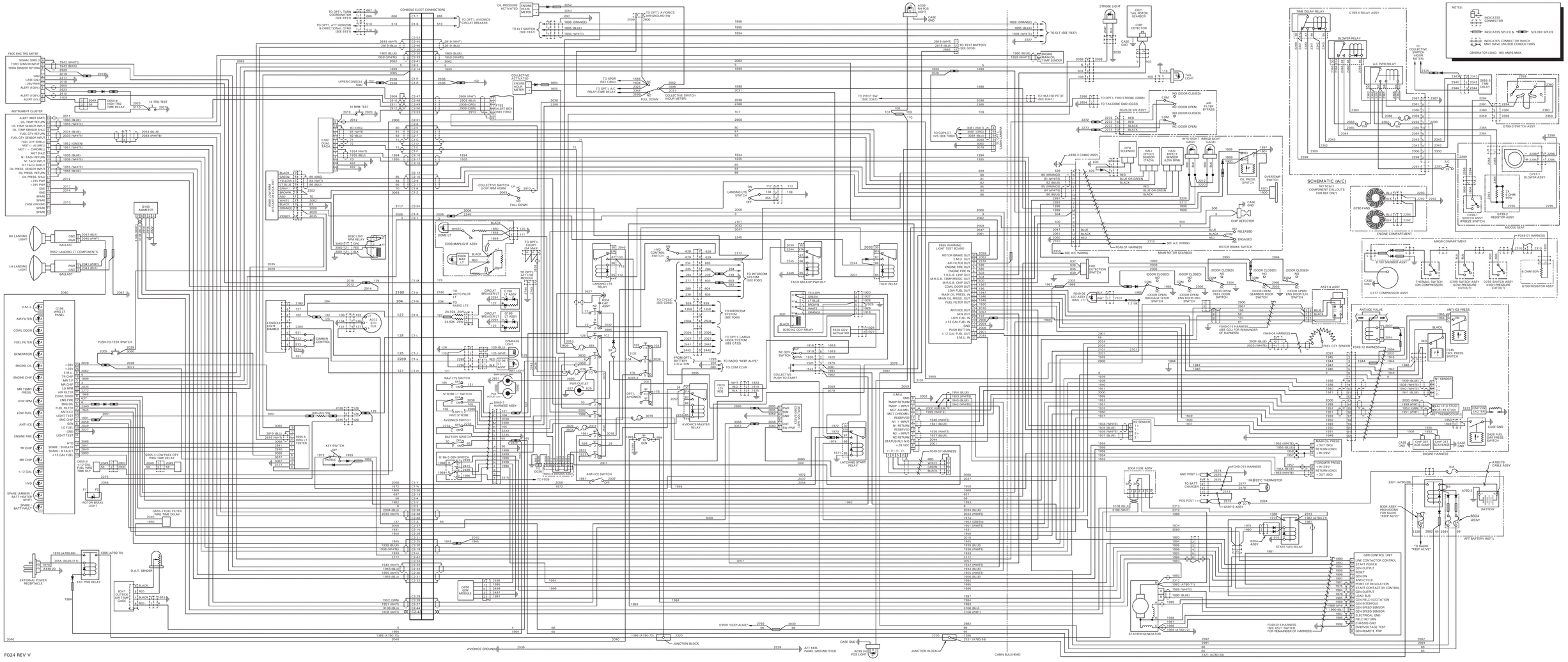

FIGURE 98-1A R66 ELECTRICAL SYSTEM (REVISION V)

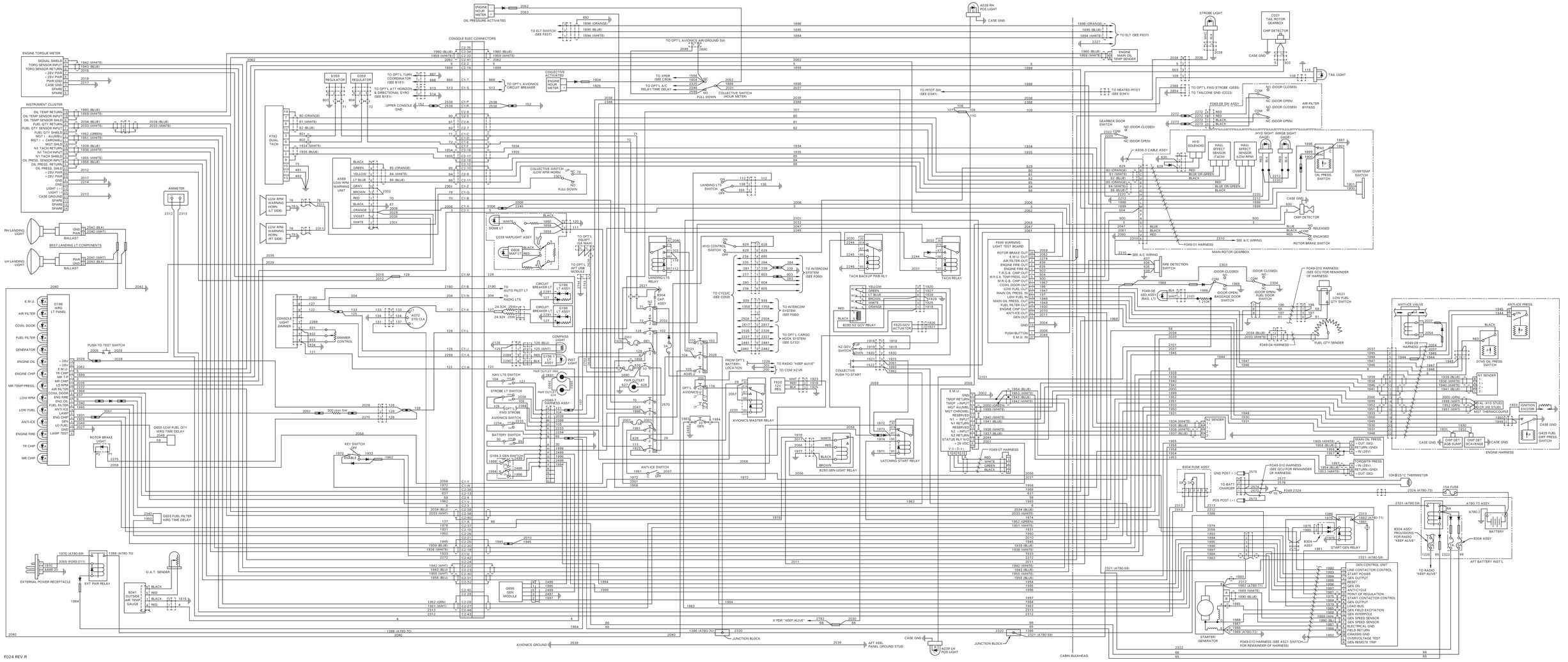

FIGURE 98-2A R66 ELECTRICAL SYSTEM (F024-2 REVISION R)

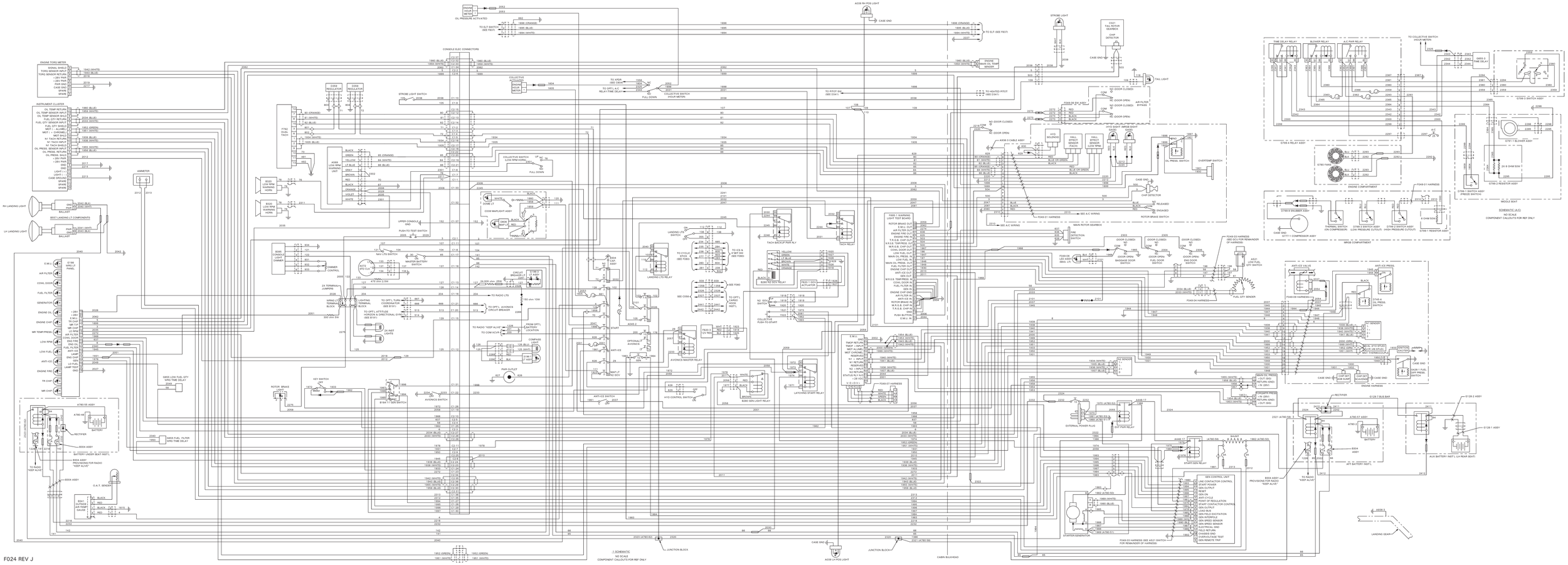
ENGINE TORQ METER
INSTRUMENT CLUSTER
AMMETER
RH LANDING LIGHT
LH LANDING LIGHT
BALLAST
8557 LANDING LT COMPONENTS
CONSOLE ELEC CONNECTORS
ENGINE HOUR METER
OIL PRESSURE ACTIVATED
TO ELT SWITCH (SEE F637)
COLLECTIVE POSITION SENSOR/ SWITCH
COLLECTIVE SWITCH (HOUR METER)
FULL DOWN
TO VPDR (SEE D844)
TO OPT'L A/C RELAY/TIME DELAY
TO PITOT (SEE D341)
TO HEATED PITOT (SEE D341)
ENGINE HOUR, OIL TEMP SENSOR
TO ELT (SEE F637)
STROBE LIGHT
CSD / TAIL ROTOR GEARBOX CHIP DETECTOR
TAIL LIGHT
STROBE LIGHT SWITCH
F762 DUAL TACH
8500 LOW RPM WARNING HORN
4599 LOW RPM WARNING UNIT
COLLECTIVE SWITCH (LOW RPM HORN)
FULL DOWN
DOME LT
D239 MAP LIGHT ASSY
UPPER CONSOLE GND
PUSH-TO-TEST SWITCH
8505 CONSOLE LIGHT DIMMER
DIMMER CONTROL
MAIN BATTERY SWITCH
CIRCUIT BREAKER LT 5 AMP
24.8Ω 40W shnt 25W
2Ω 10W shnt 10W
TO RADIO LTS
TO OPT'L AVIONICS CIRCUIT BREAKER
TO RADIO "KEEP ALIVE"
TO COM #2VR
FROM OPT'L BATTERY LOCATION
COMPASS LIGHT
PWR OUTLET
TO OPT'L ATTITUDE HORIZON & DIRECTIONAL GYRO (SEE B181)
TO OPT'L TURN COORDINATOR (SEE B181)
2X TERMINAL JUMPERS
WIRING LT DISTRIBUTION BLOCK
LIGHTING DISTRIBUTION BLOCK
LTS INST LIGHTS
KEY SWITCH OFF
RIGHT
LEFT
ROTOR BRAKE LIGHT
B181 / GEN SWITCH
AVIONICS SWITCH
ANTI-ICE SWITCH
ANTI-ICE
OPTIONAL AVIONICS
AVIONICS MASTER RELAY
H-D CONTROL SWITCH
LANDING LTS SWITCH
TO CYCLIC STICK (SEE F240)
LANDING LTS RELAY
TO ICS & START SW (SEE F060)
SEE F060
TO OPT'L CARGO HOOK INST'L
SEE C054
TACH BACKUP PWR RLY
TACH RELAY
N2 SOV SWITCH
N2 SOV
COLLECTIVE PUSH TO START
FADS 2 (12 VDC)
FADS 2 (24 VDC)
8260 GEN LIGHT RELAY
LATCHING START RELAY
FROM LT SPKR VOL
FROM N2 SOV RELAY
FROM TACH PWR RLY
FROM LT GEN ACTIVE
FROM LT GEN RESET
FROM LT GEN OVERVOLT
FROM LT GEN FAULT
FROM LT GEN OFF
FROM LT GEN ON
FROM LT GEN SENSE
FROM LT GEN EXCITE
FROM LT GEN FIELD
FROM LT GEN GND
FROM LT GEN B+
FROM LT GEN B+
FROM LT GEN B+

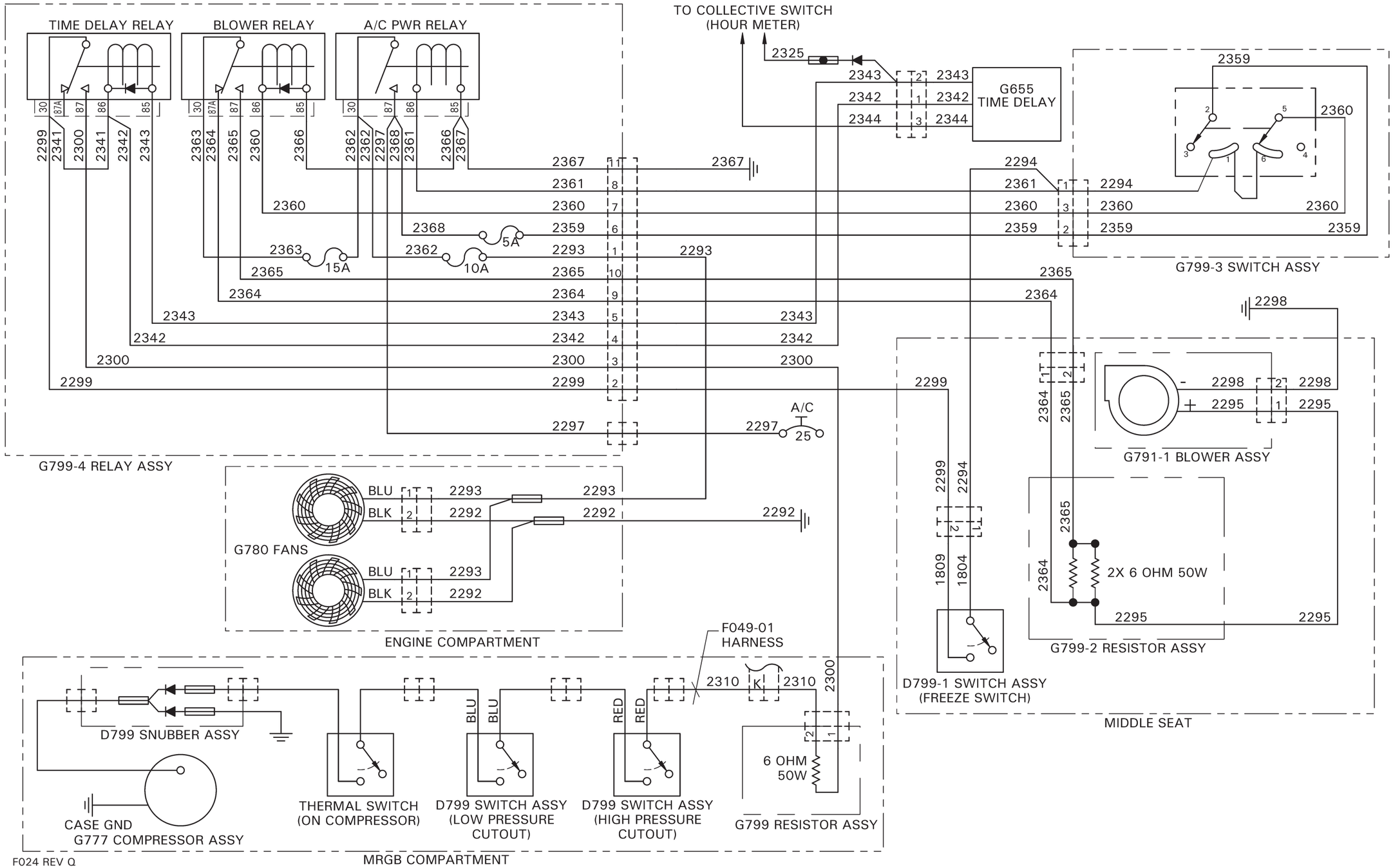

FIGURE 98-3 AIR CONDITIONING INSTALLATION

Intentionally Blank

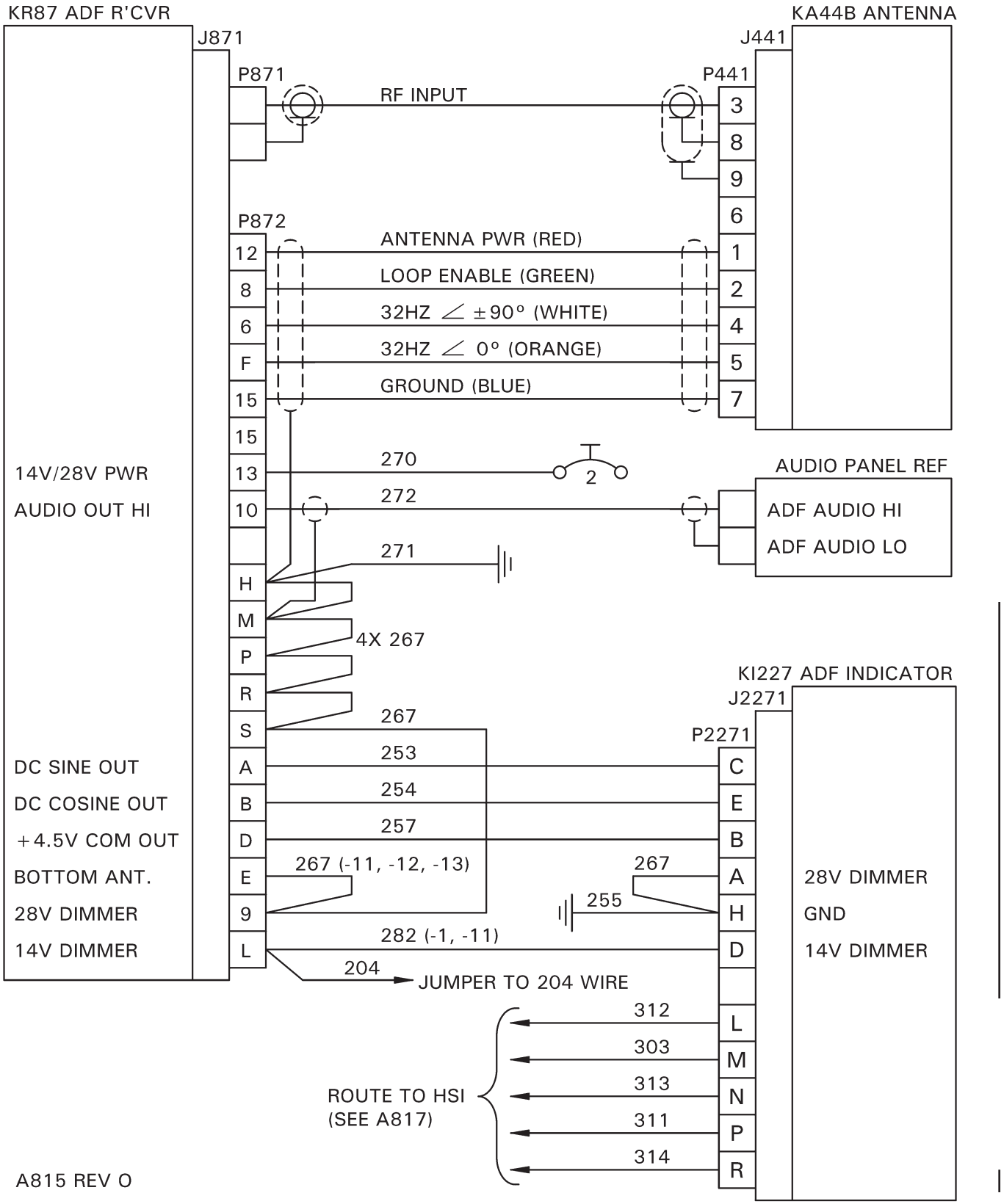

FIGURE 98-4 ADF INSTALLATION

Intentionally Blank

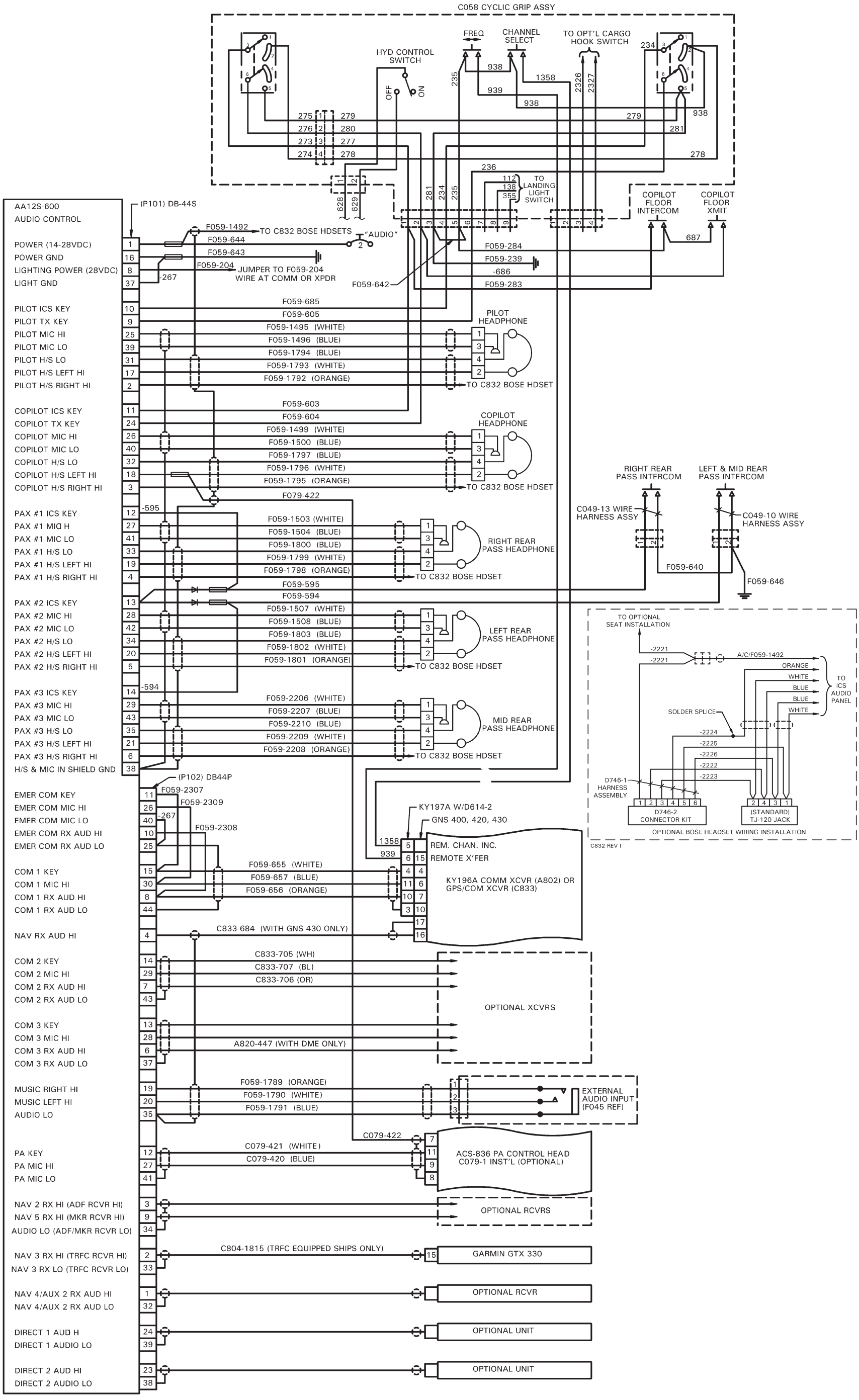

FIGURE 98-5 STANDARD AUDIO INSTALLATION (NAT AA12S-600 AUDIO CONTROL)

Intentionally Blank

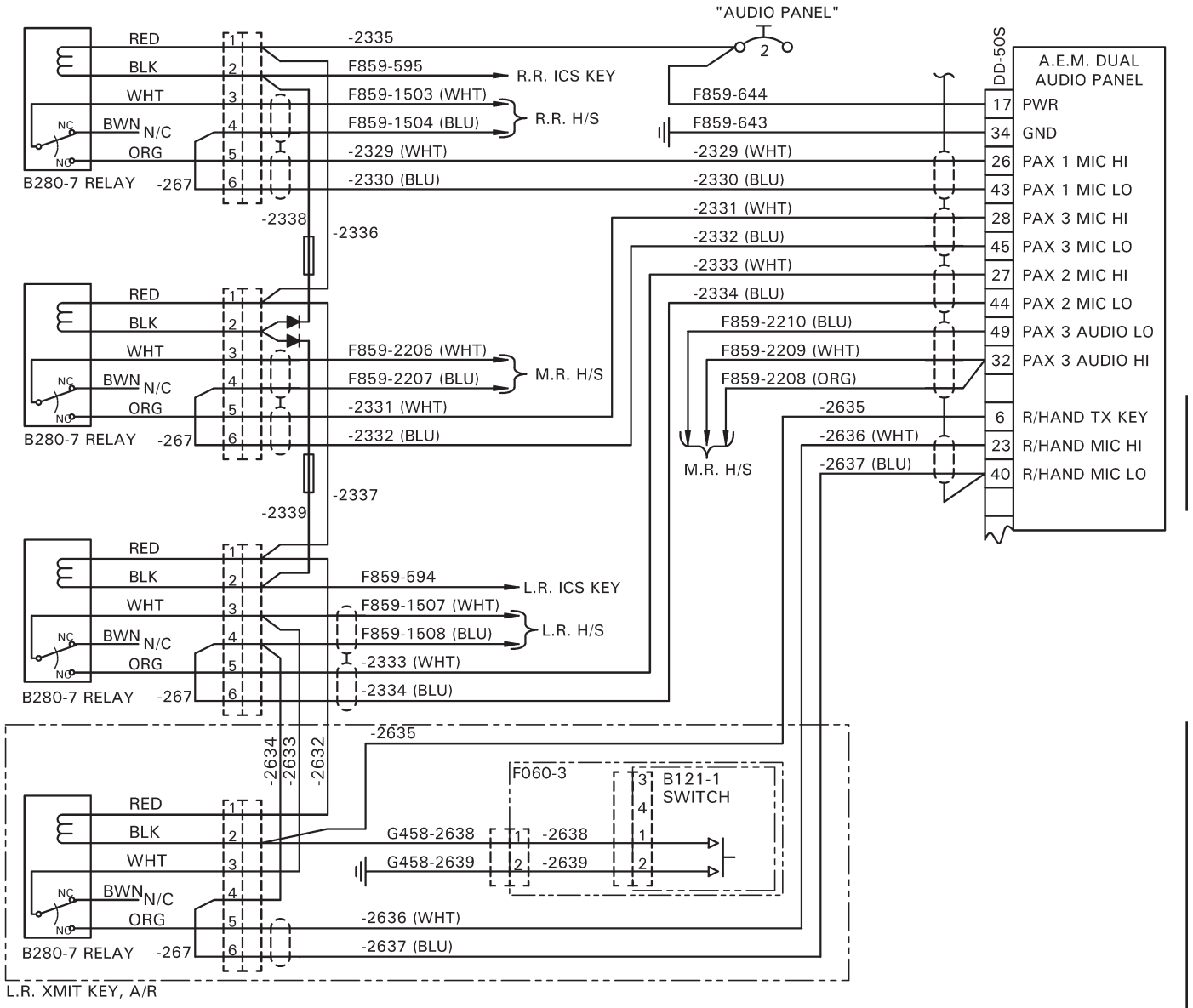

C823 REV Z

FIGURE 98-6 DUAL AUDIO CONTROL INSTALLATION

Intentionally Blank

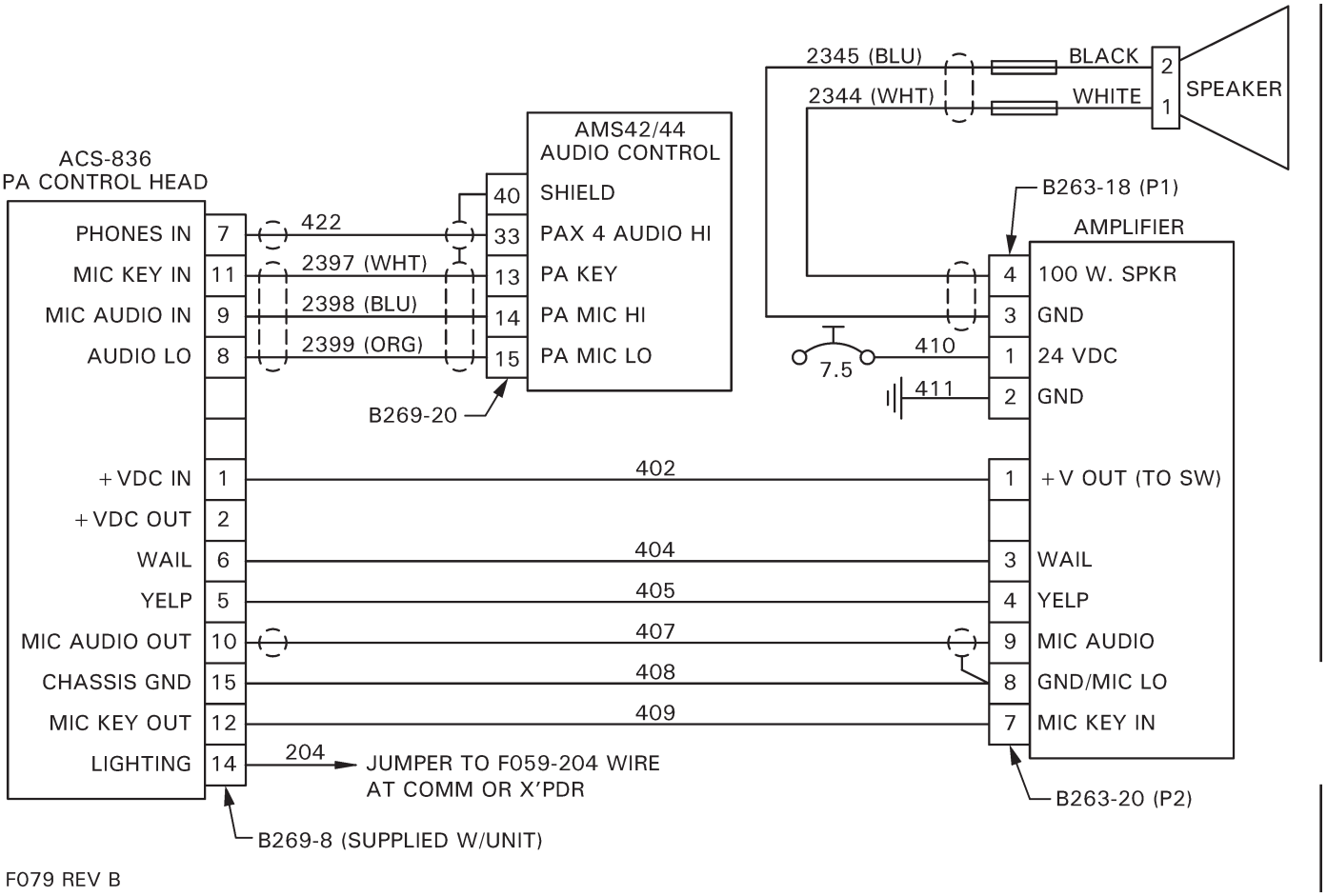

FIGURE 98-7 PA/SIREN INSTALLATION

Intentionally Blank

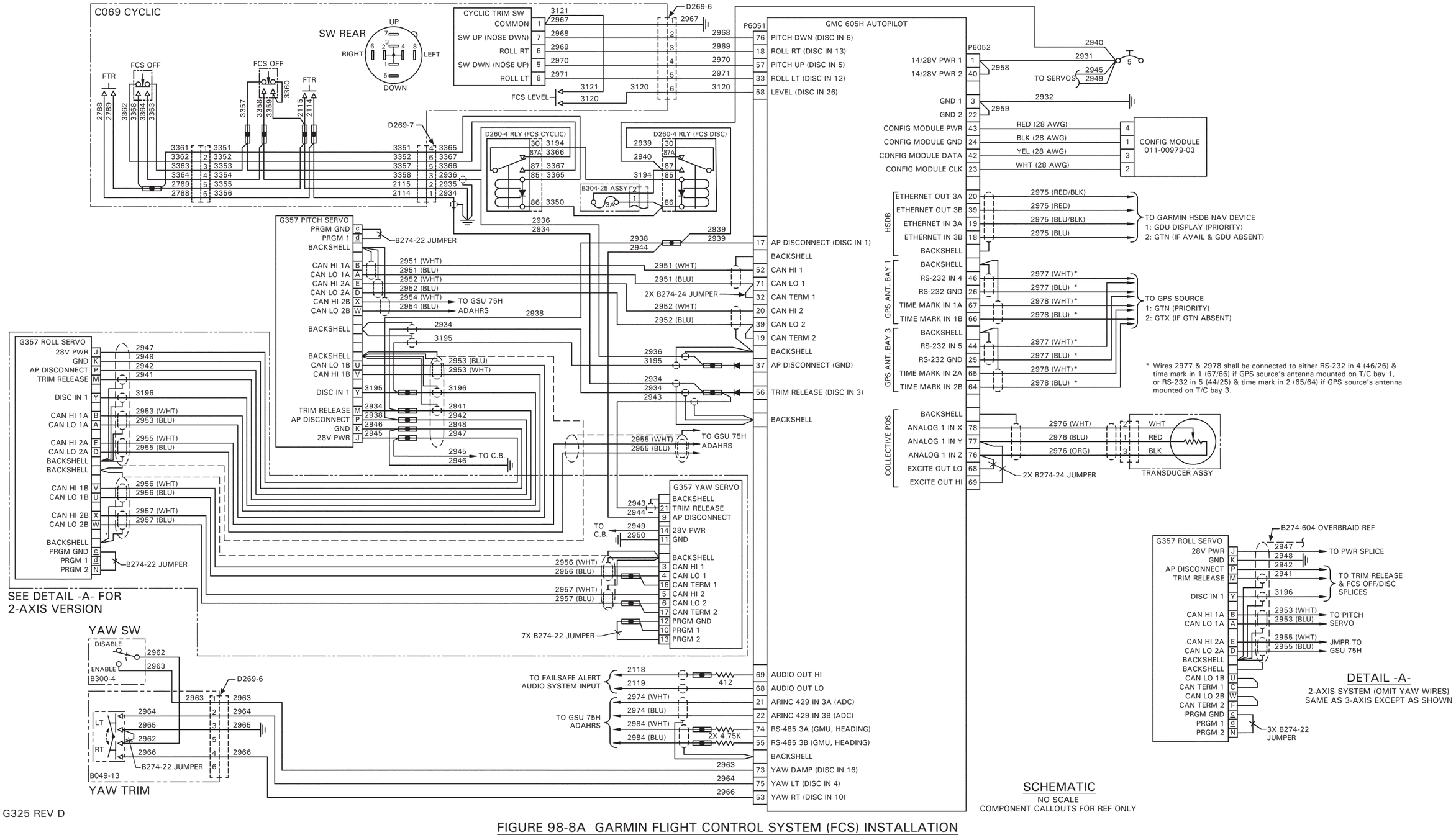

* Wires 2977 & 2978 shall be connected to either RS-232 in 4 (46/26) & time mark in 1 (67/66) if GPS source's antenna mounted on T/C bay 1, or RS-232 in 5 (44/25) & time mark in 2 (65/64) if GPS source's antenna mounted on T/C bay 3.

FIGURE 98-8A GARMIN FLIGHT CONTROL SYSTEM (FCS) INSTALLATION

Intentionally Blank

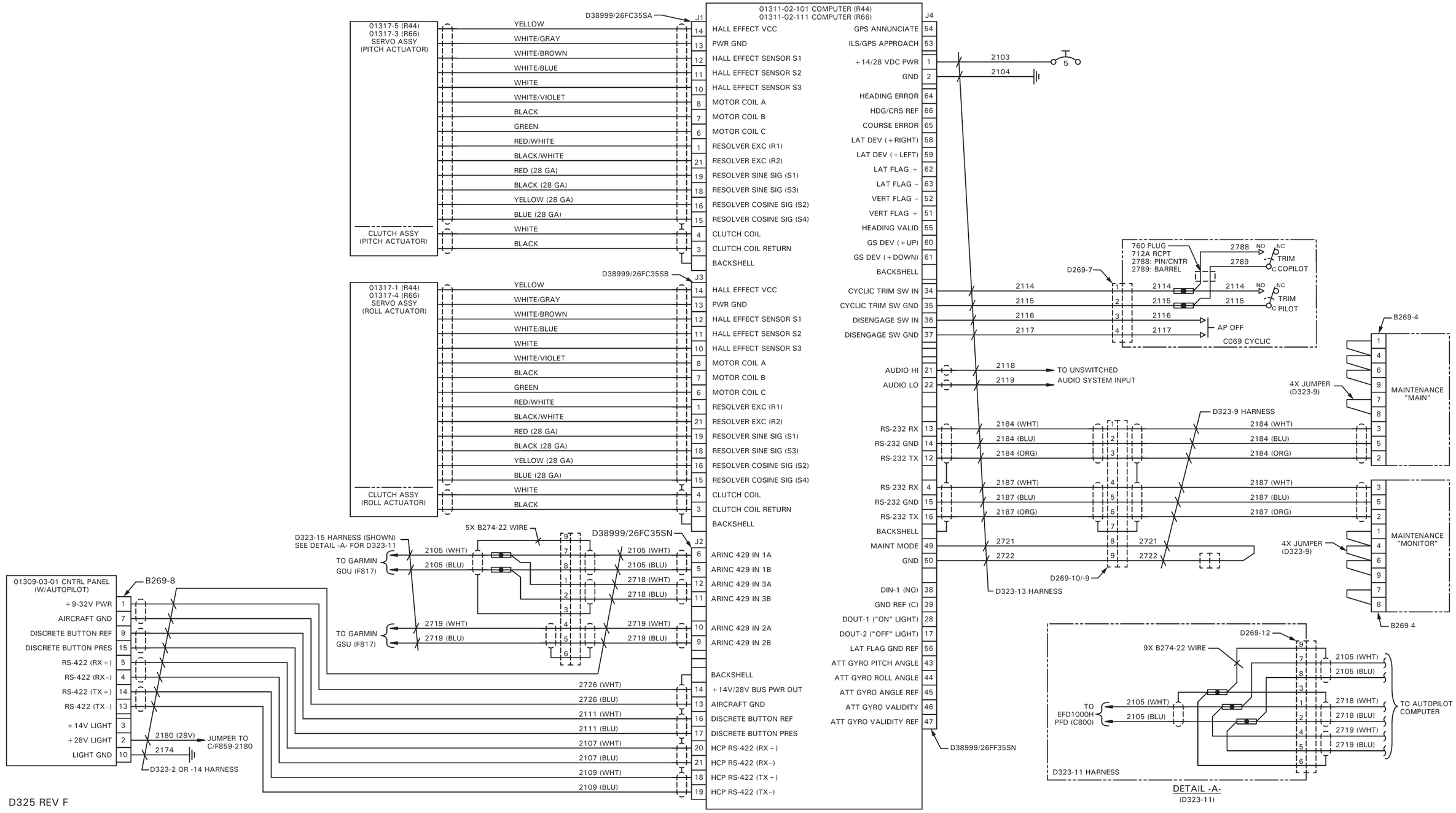

FIGURE 98-8B D325-1 AUTOPILOT (HELISAS, WITHOUT BC MODE) SCHEMATIC

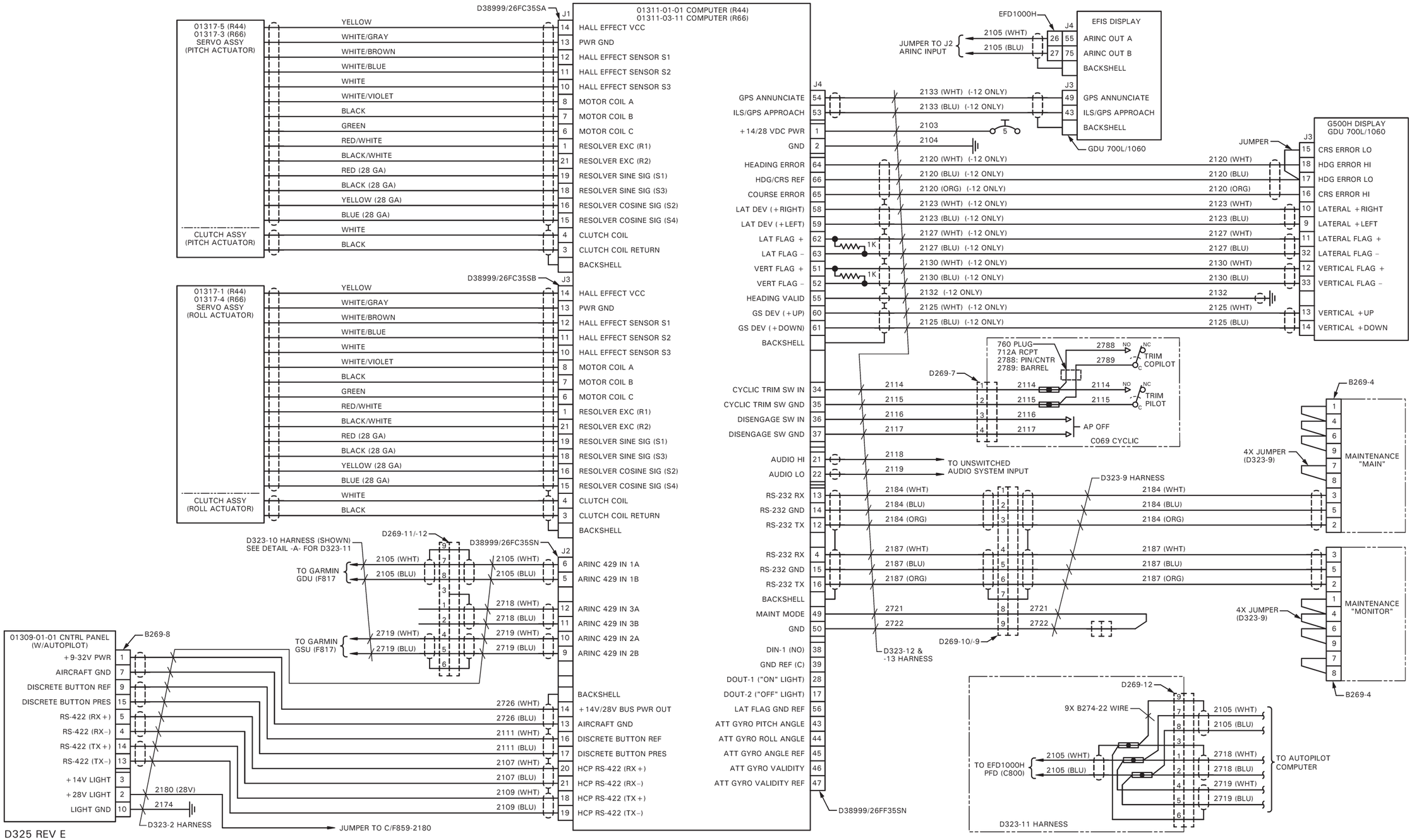

FIGURE 98-8C D325-1 AUTOPILOT (HELISAS, WITH BC MODE) SCHEMATIC

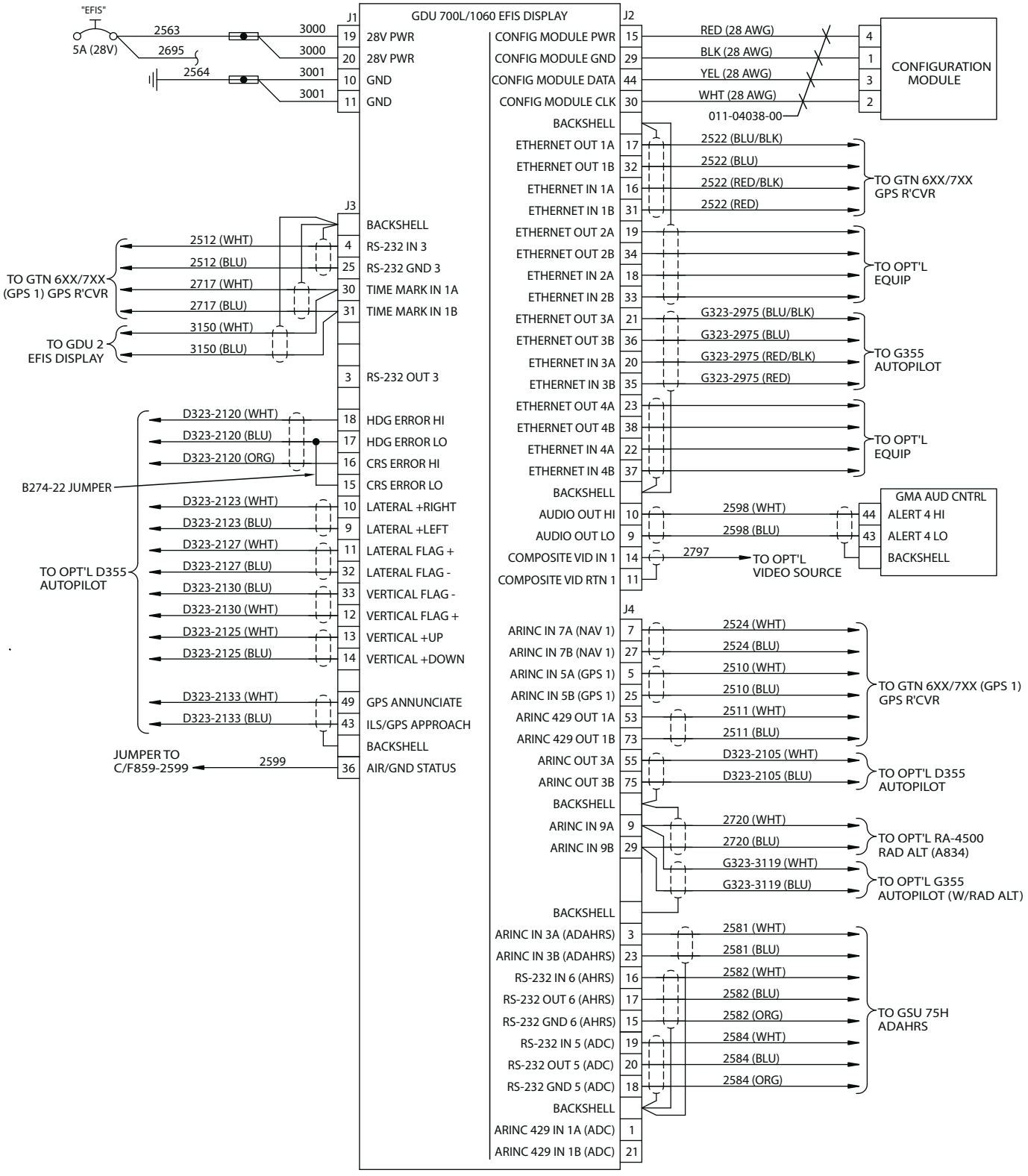

F817 Rev R

FIGURE 98-9 GARMIN GDU 700L or 1060 INSTALLATION (F817 REVISION R)

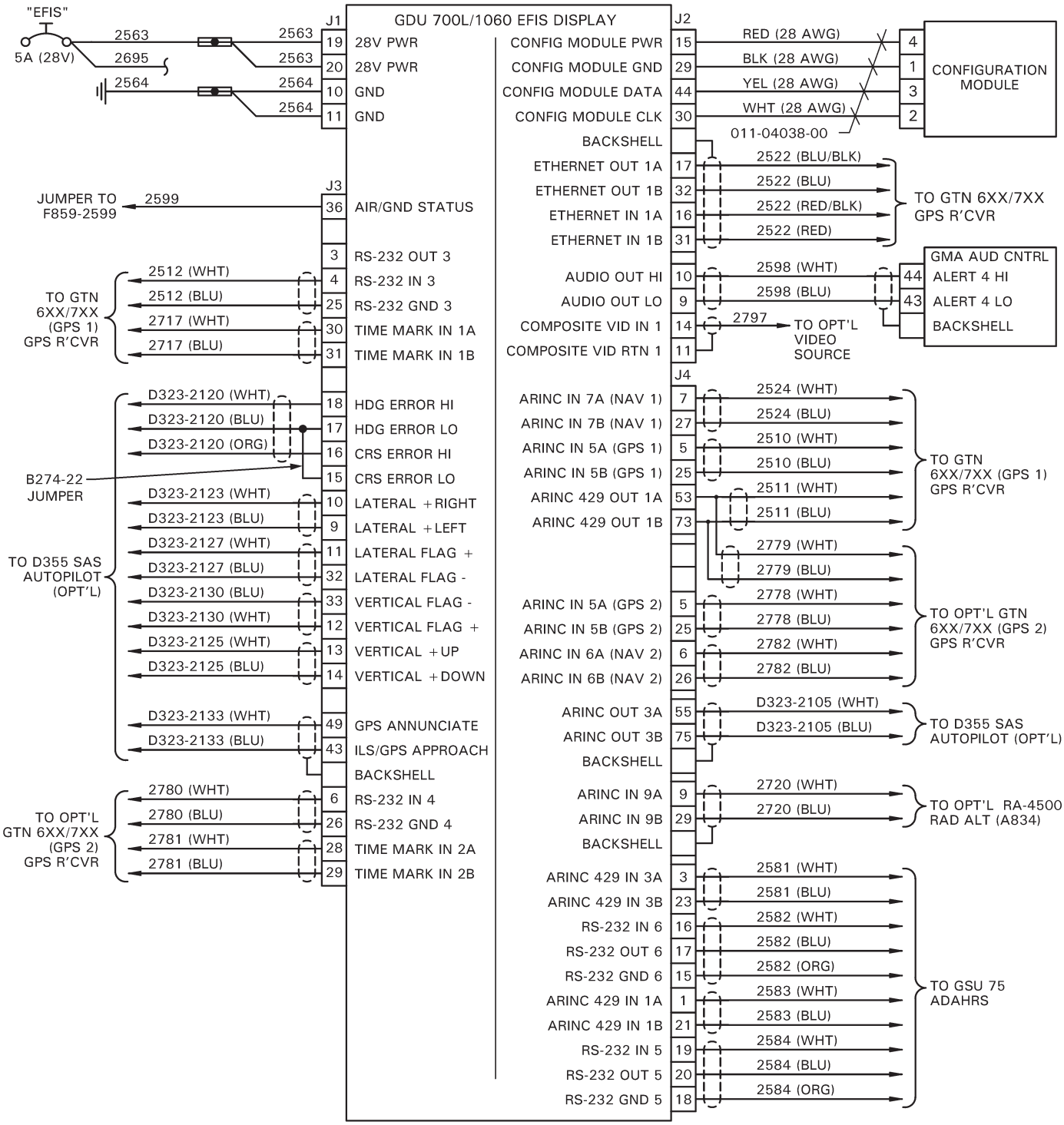

F817 REV J

FIGURE 98-9A GARMIN GDU 700L or 1060 INSTALLATION (F817 REVISION J)

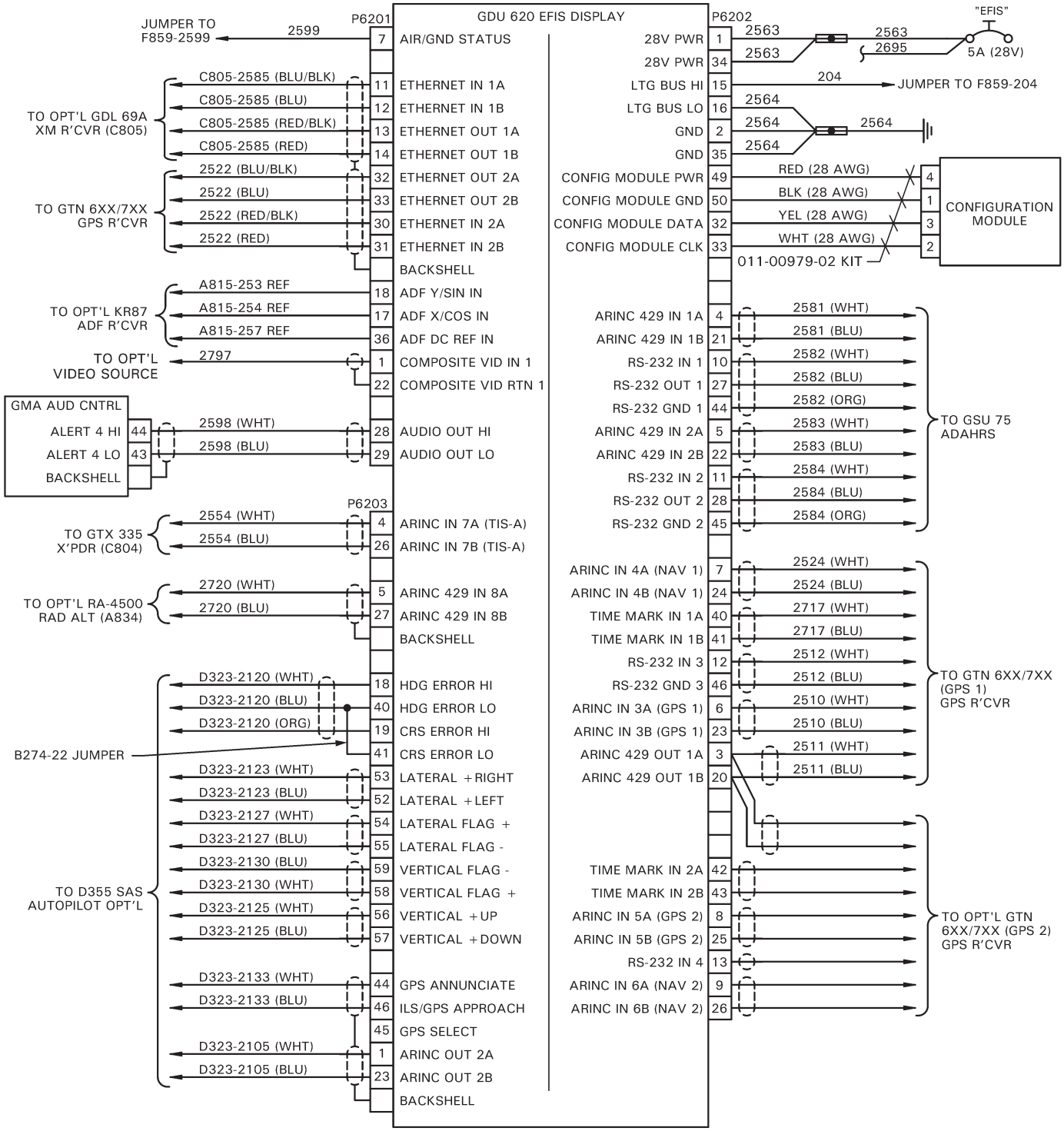

F817 REV I

FIGURE 98-9B GARMIN GDU 620 INSTALLATION

Intentionally Blank

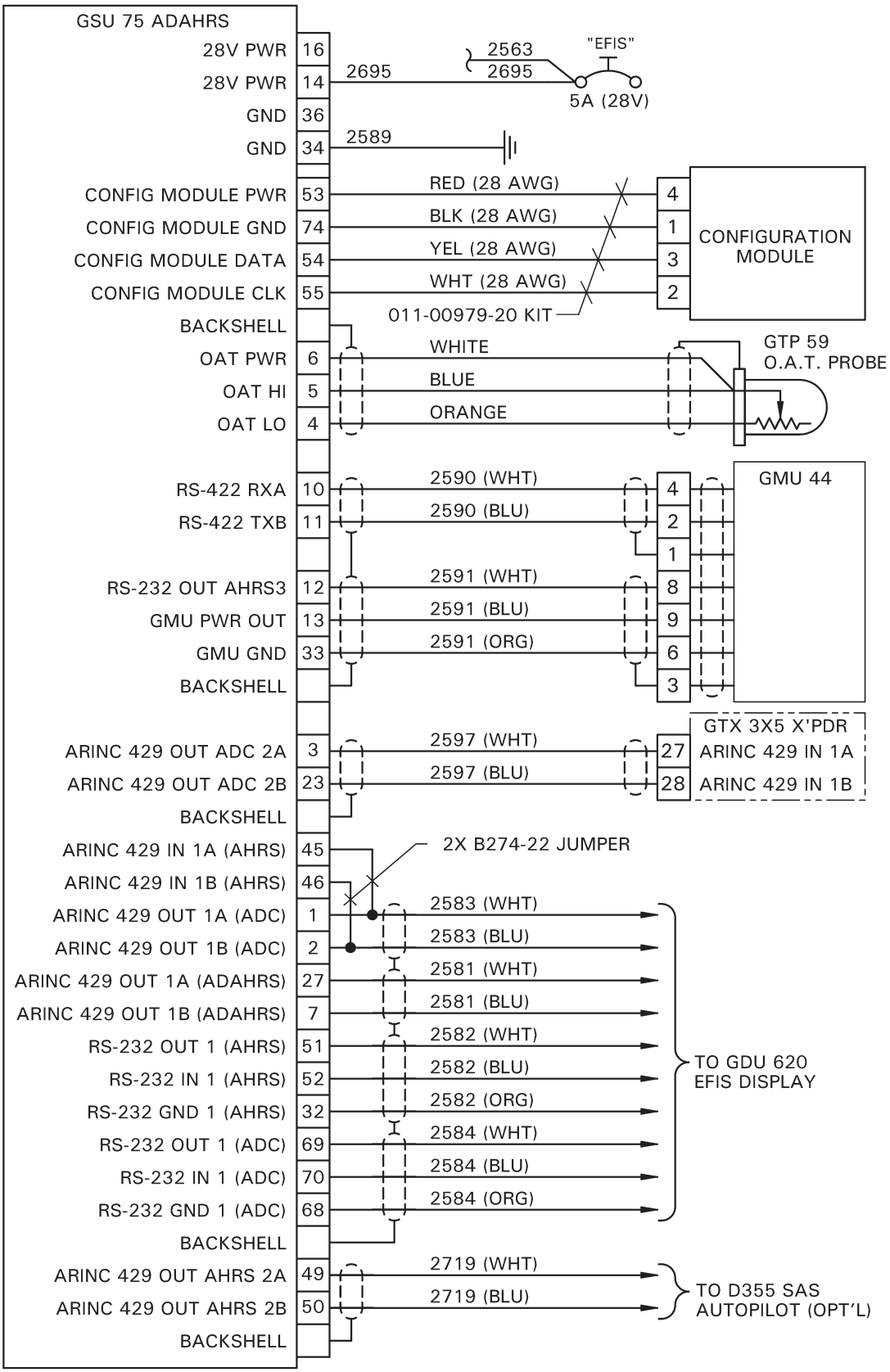

F817 REV I

FIGURE 98-10 GARMIN GSU 75 ADAHRS INSTALLATION

Intentionally Blank

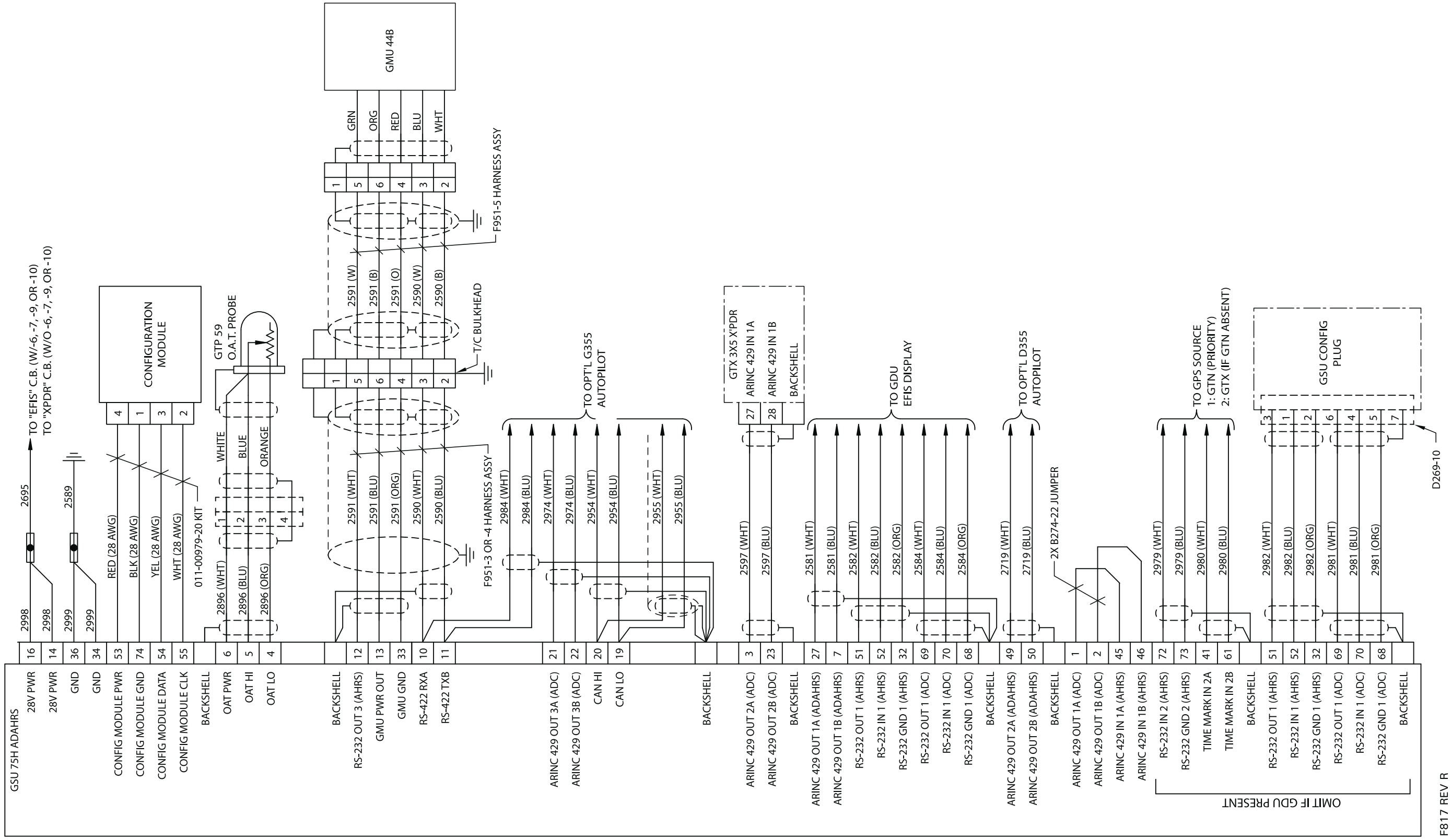

FIGURE 98-10A GARMIN GSU 75H ADAHRS INSTALLATION

Intentionally Blank

Intentionally Blank

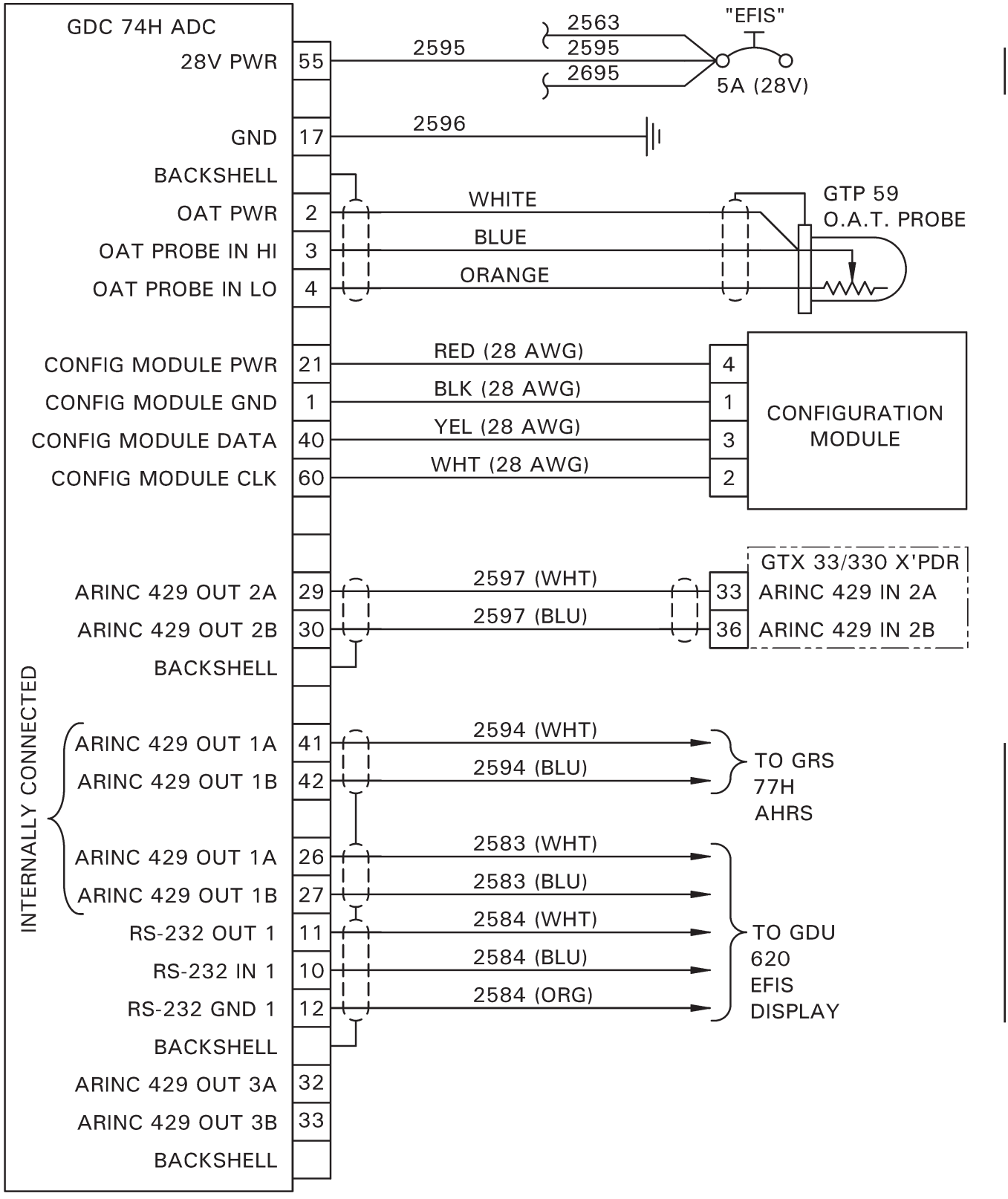

F817 REV E

FIGURE 98-11 GARMIN GDC 74H AIR DATA COMPUTER INSTALLATION

Intentionally Blank

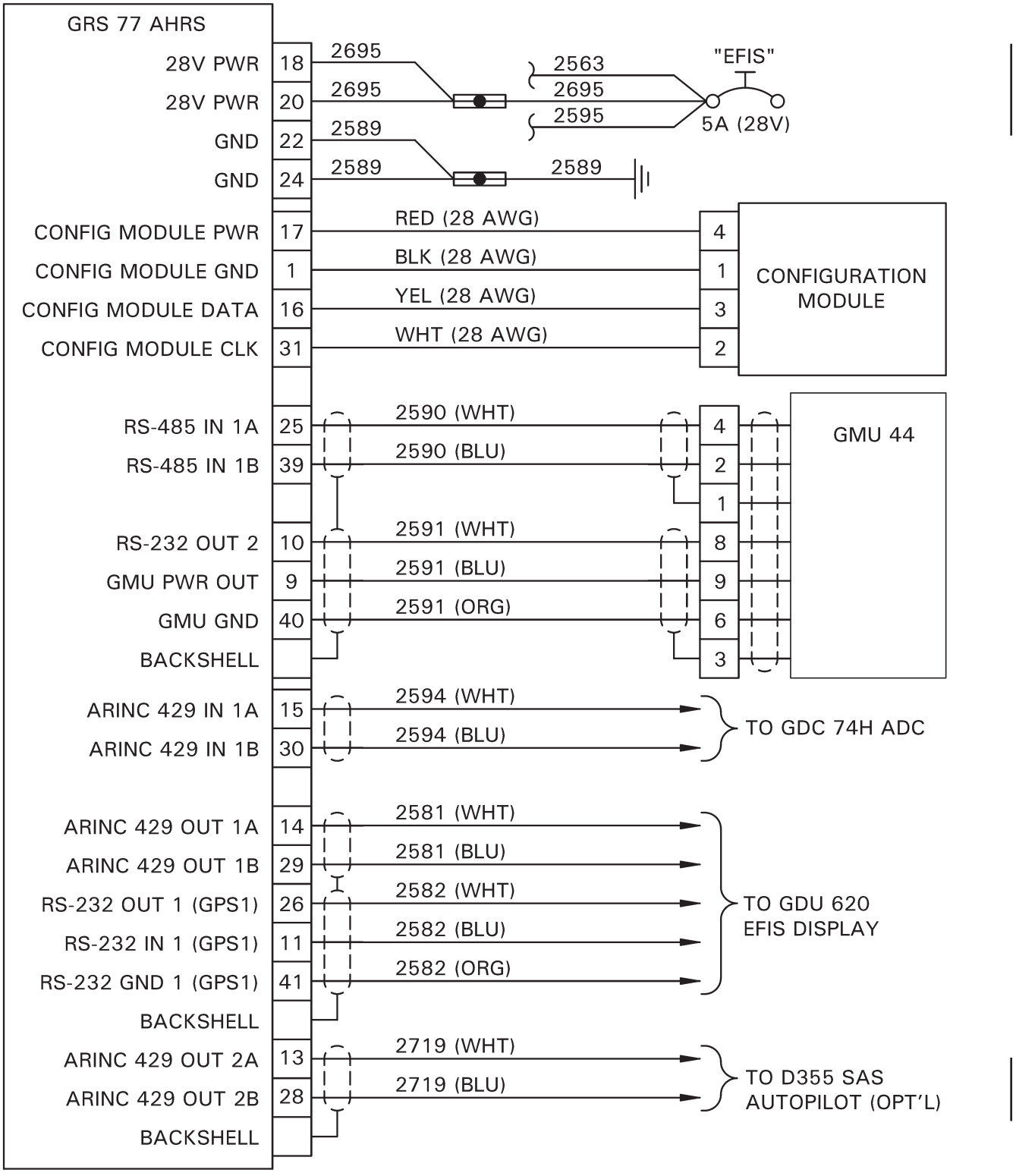

FIGURE 98-12 GARMIN GRS 77H AHRS INSTALLATION

Intentionally Blank

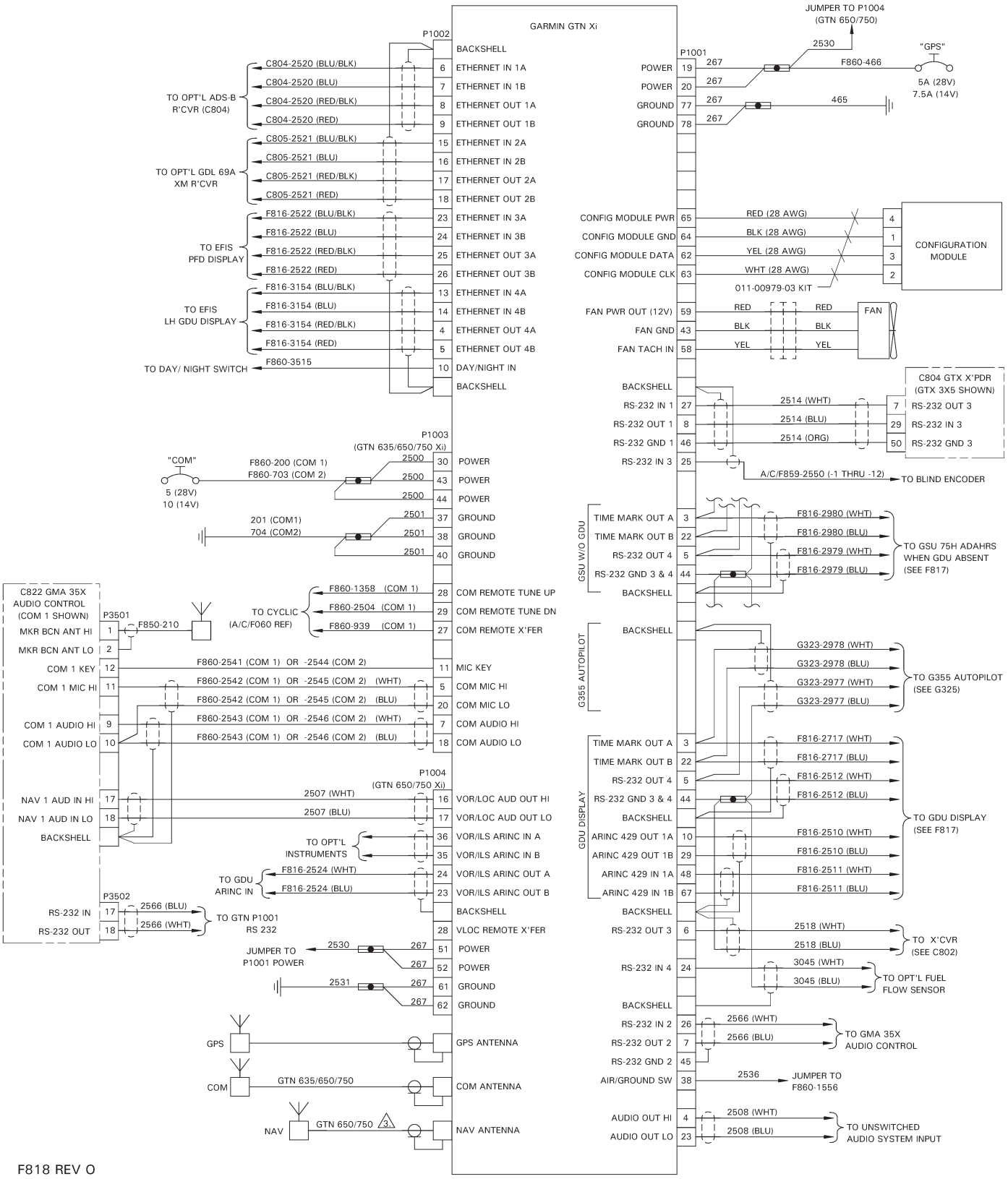

FIGURE 98-12A GARMIN GTN 6XX/7XX-SERIES GPS INSTALLATION (F818 REVISION O)

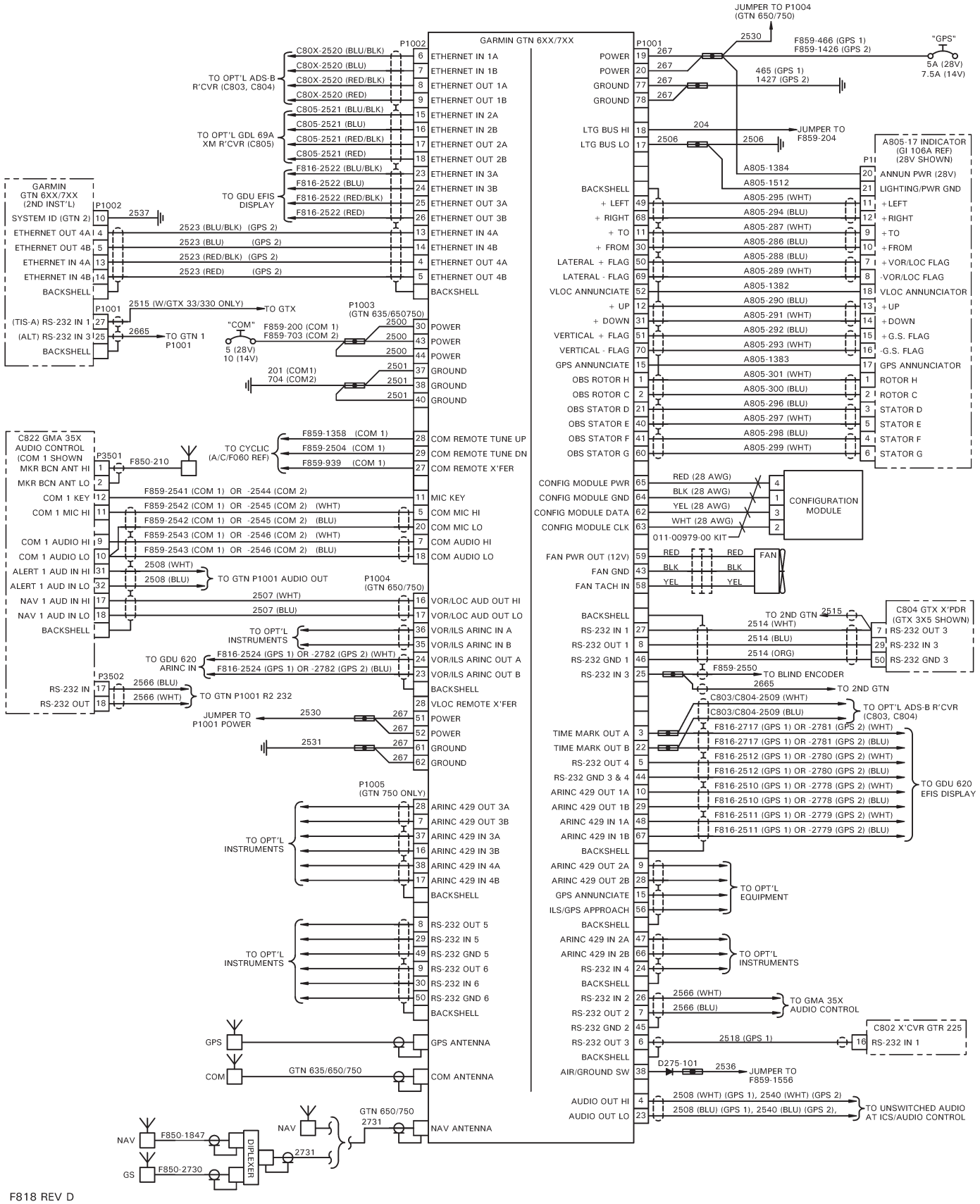

FIGURE 98-13 GARMIN GTN 6XX/7XX-SERIES GPS INSTALLATION (F818 REVISION D)

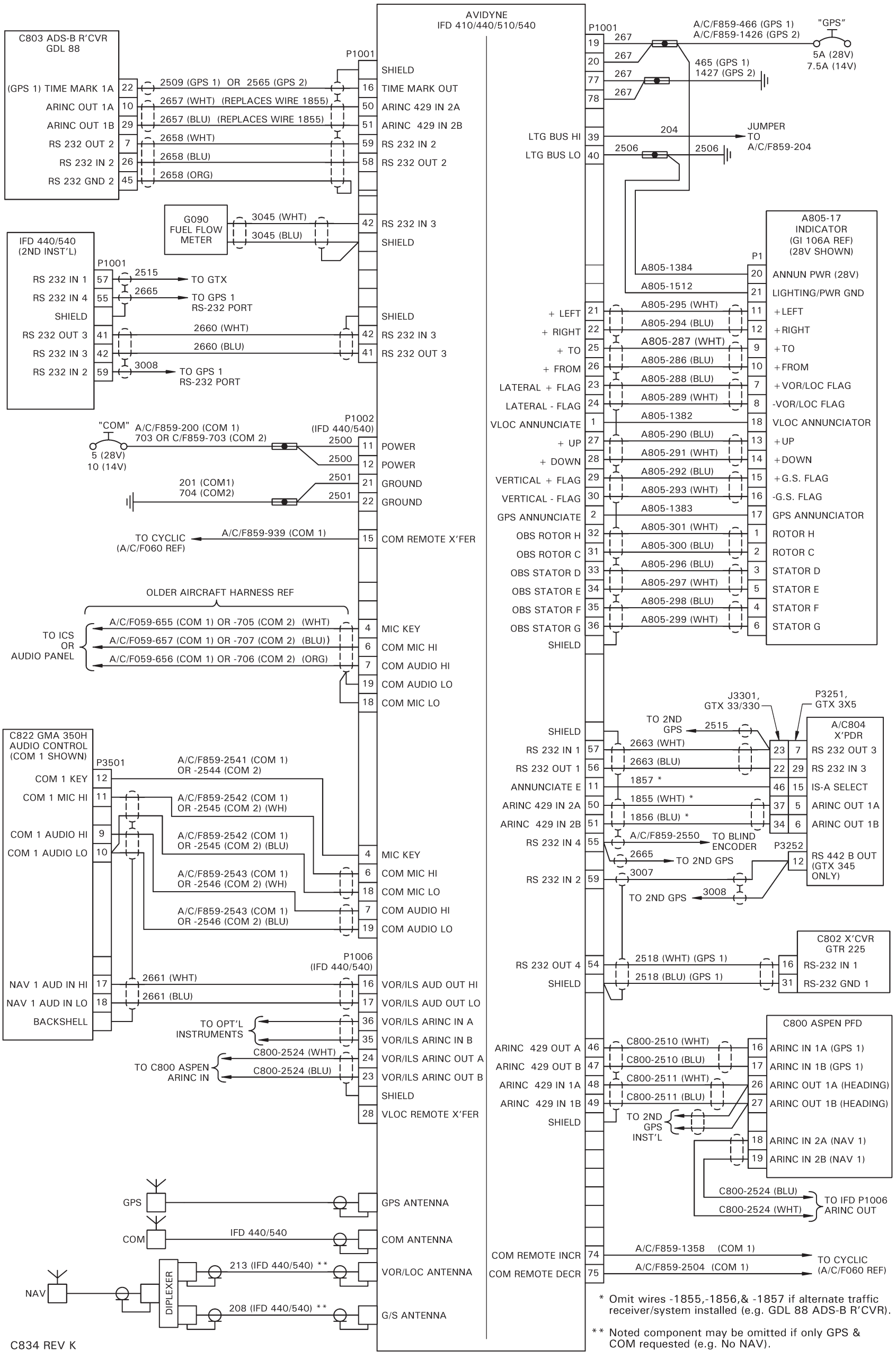

FIGURE 98-13A AVYIDYNE IFD 4XX/5XX-SERIES INSTALLATION

Intentionally Blank

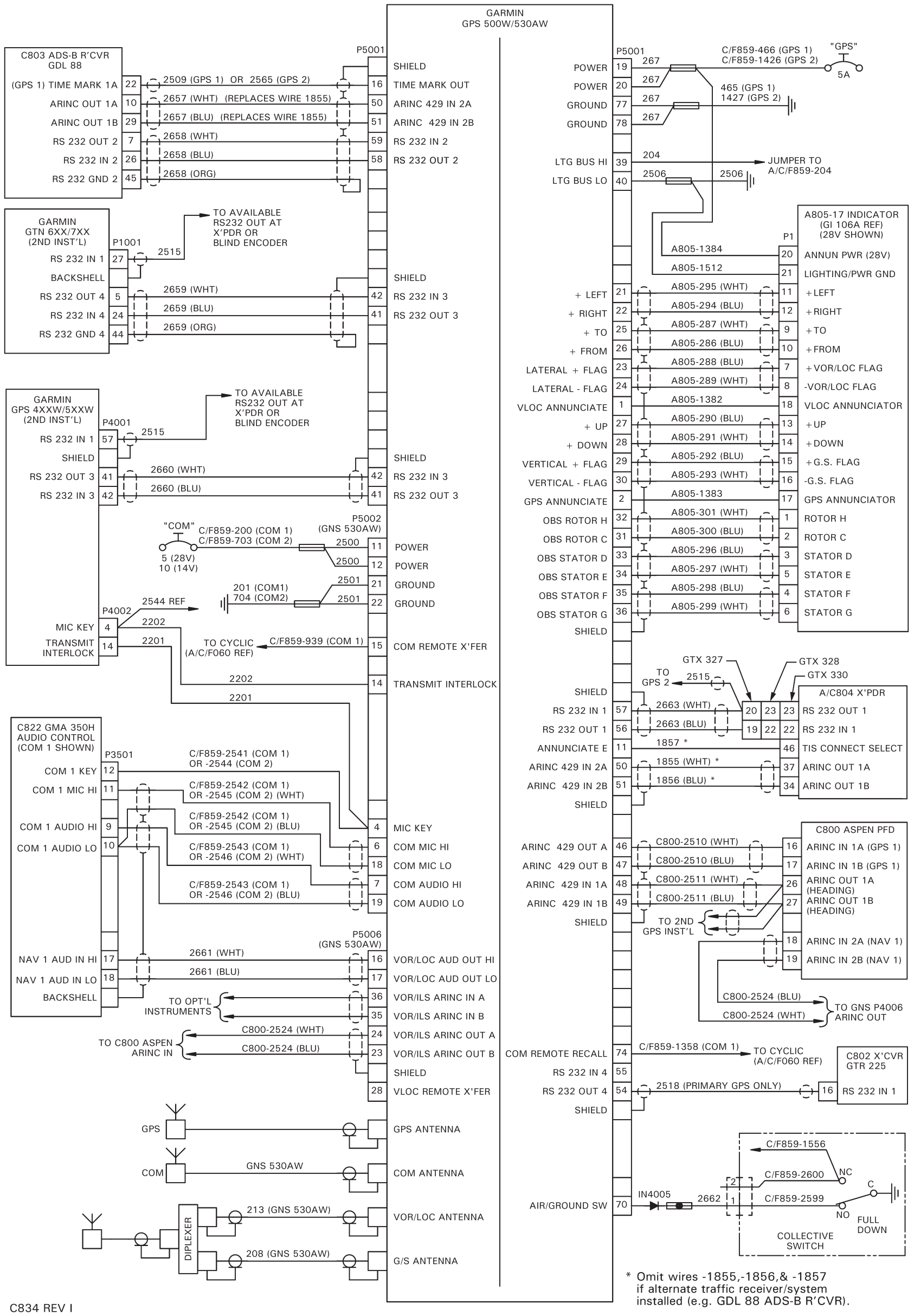

FIGURE 98-13B GARMIN 500 SERIES GPS INSTALLATION

C834 REV I

FIGURE 98-13C GARMIN 500 SERIES GPS INSTALLATION

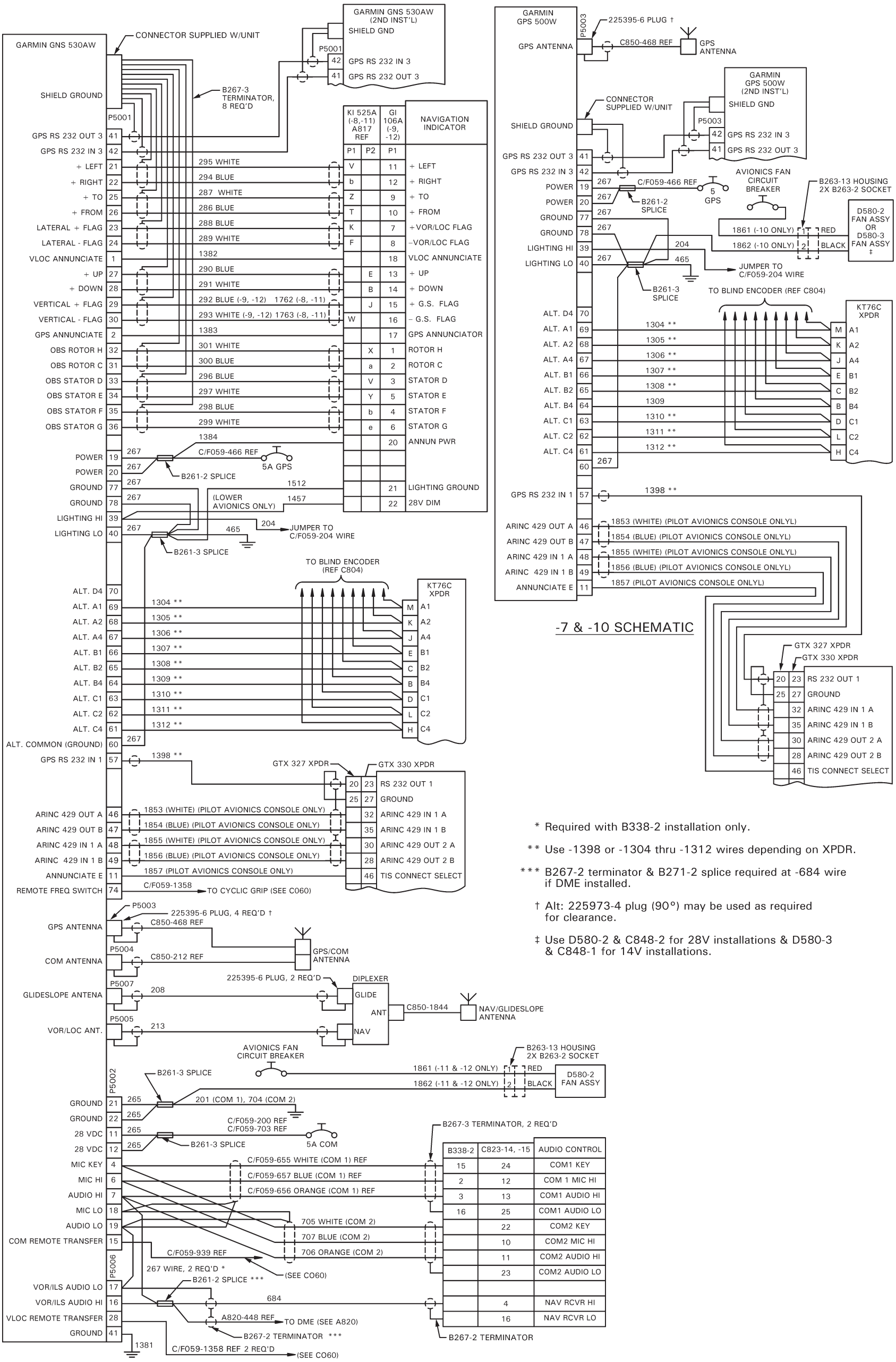

-7 & -10 SCHEMATIC

* Required with B338-2 installation only.

** Use -1398 or -1304 thru -1312 wires depending on XPDR.

*** B267-2 terminator & B271-2 splice required at -684 wire if DME installed.

† Alt: 225973-4 plug (90°) may be used as required for clearance.

‡ Use D580-2 & C848-2 for 28V installations & D580-3 & C848-1 for 14V installations.

C834 REV H

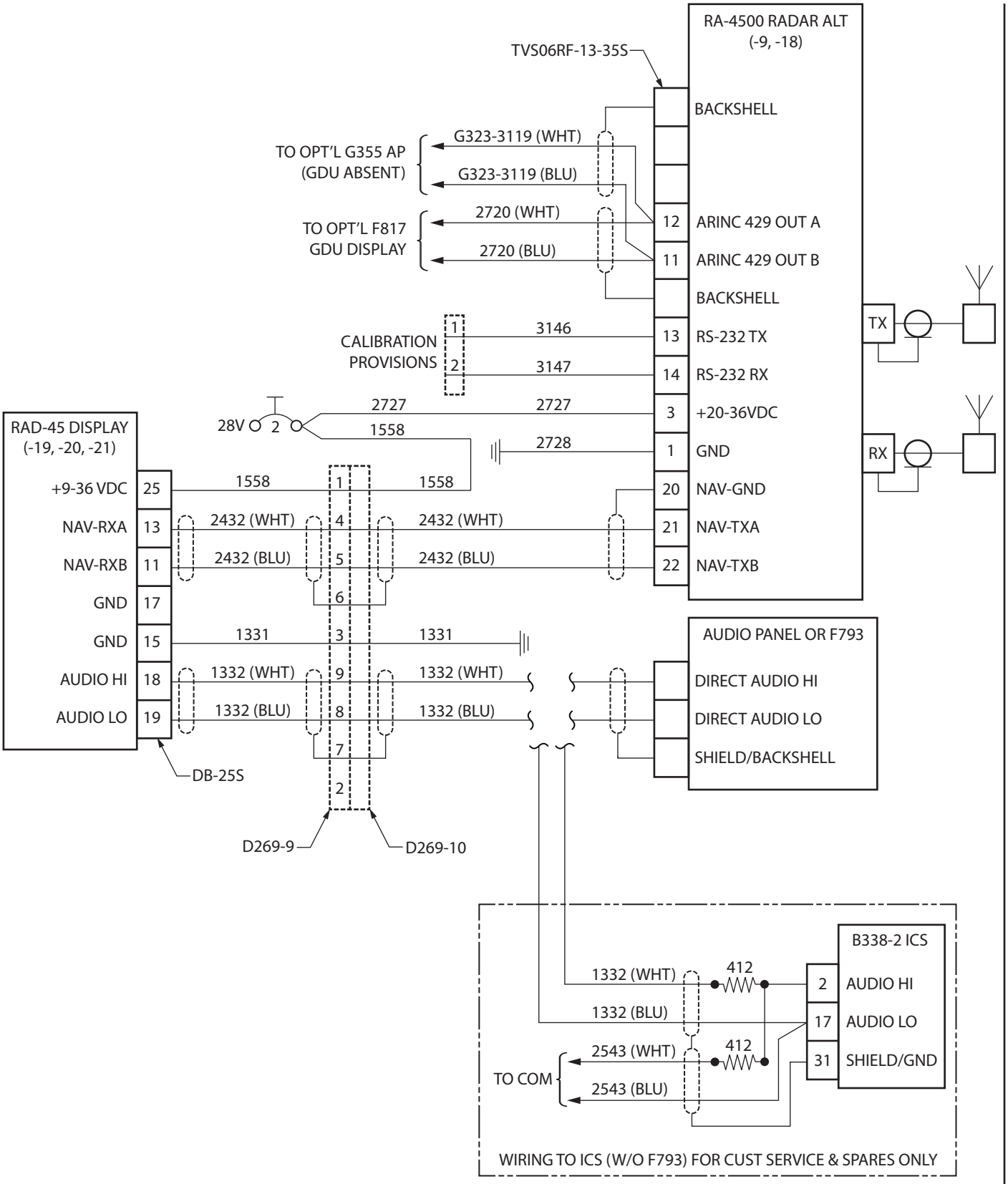

A834 REV N

FIGURE 98-14 RA-4500 RADAR ALTIMETER INSTALLATION

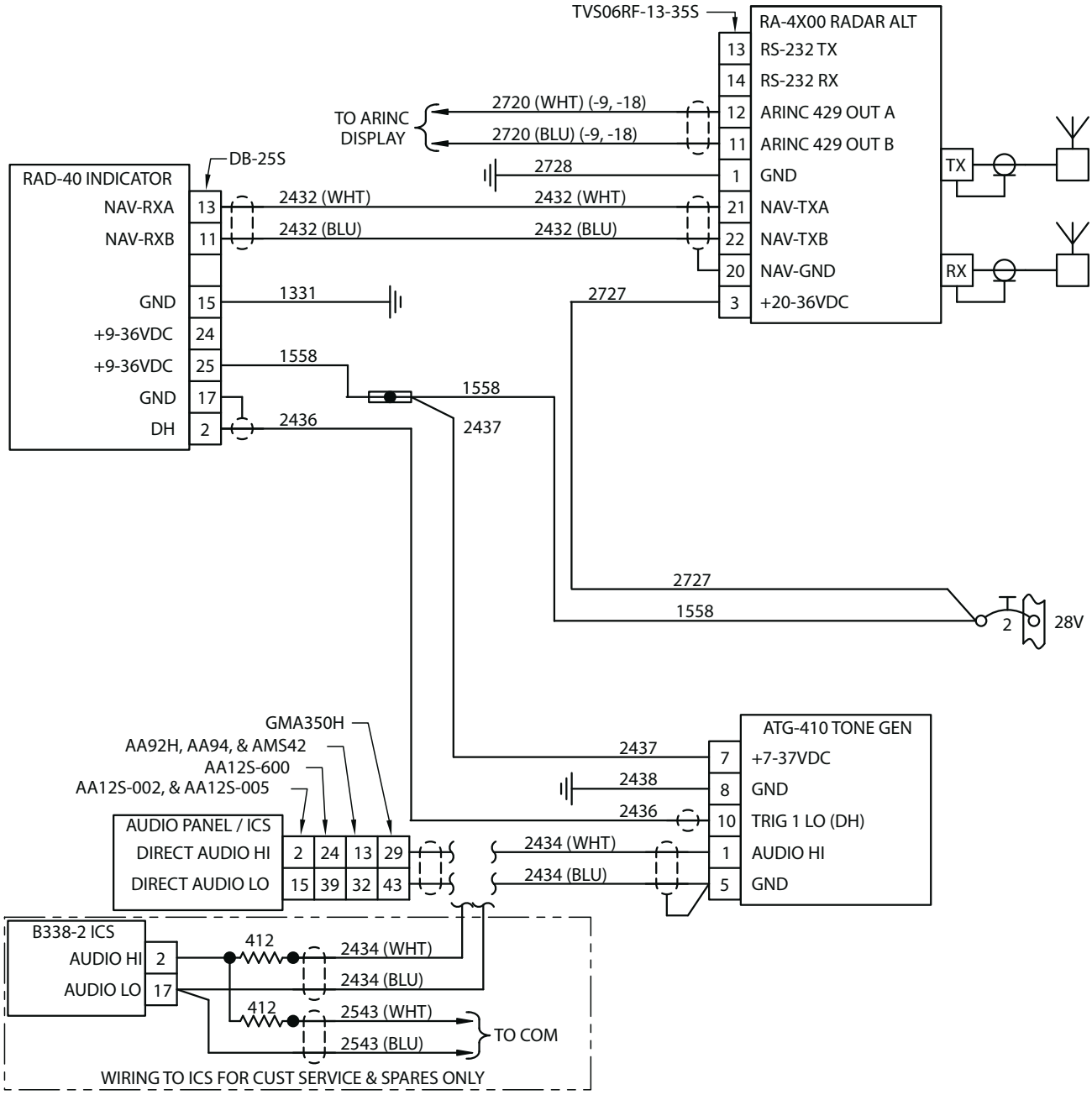

A834 Rev K

FIGURE 98-14A RA-4000 RADAR ALTIMETER INSTALLATION

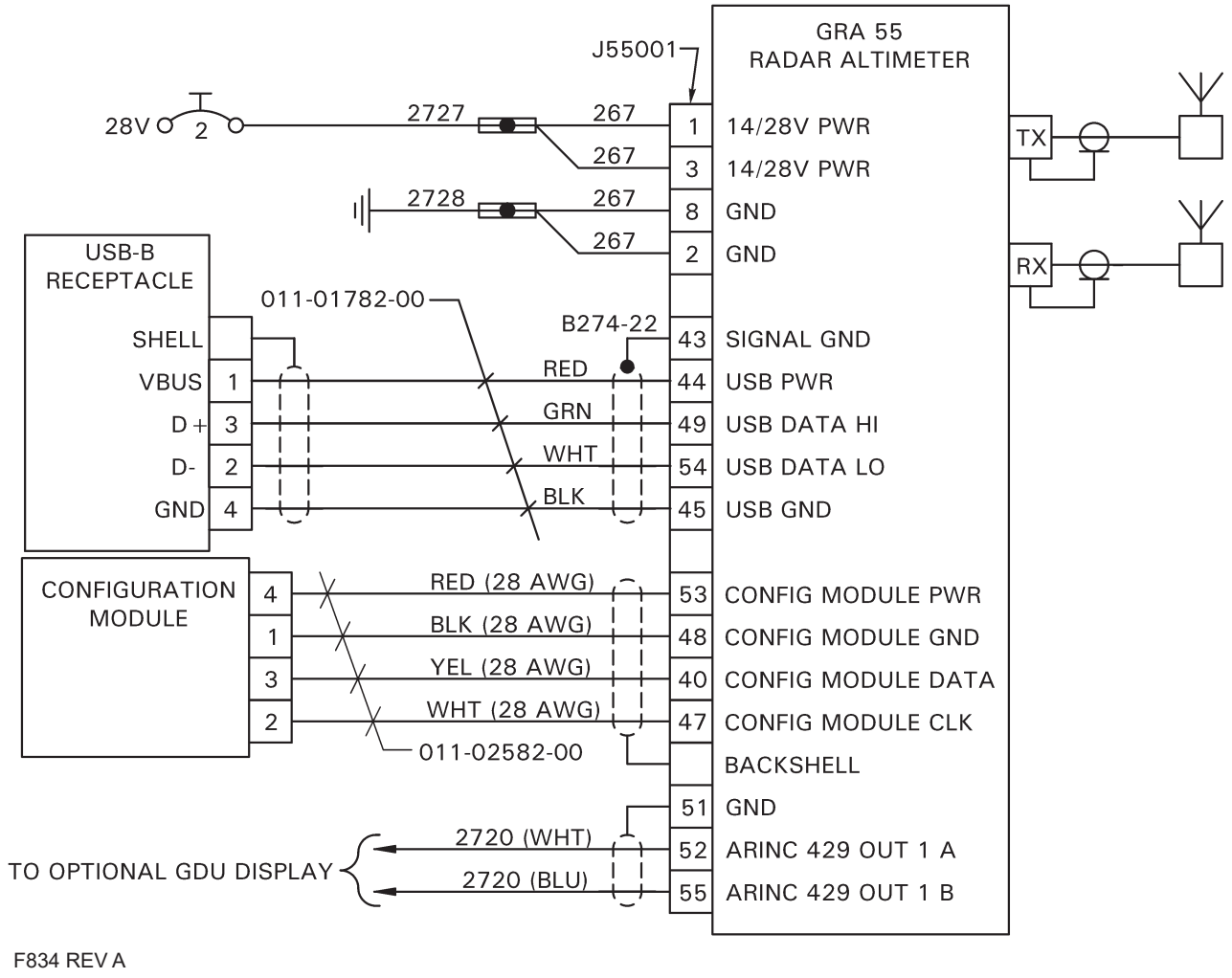

FIGURE 98-14B GRA 55 RADAR ALTIMETER INSTALLATION

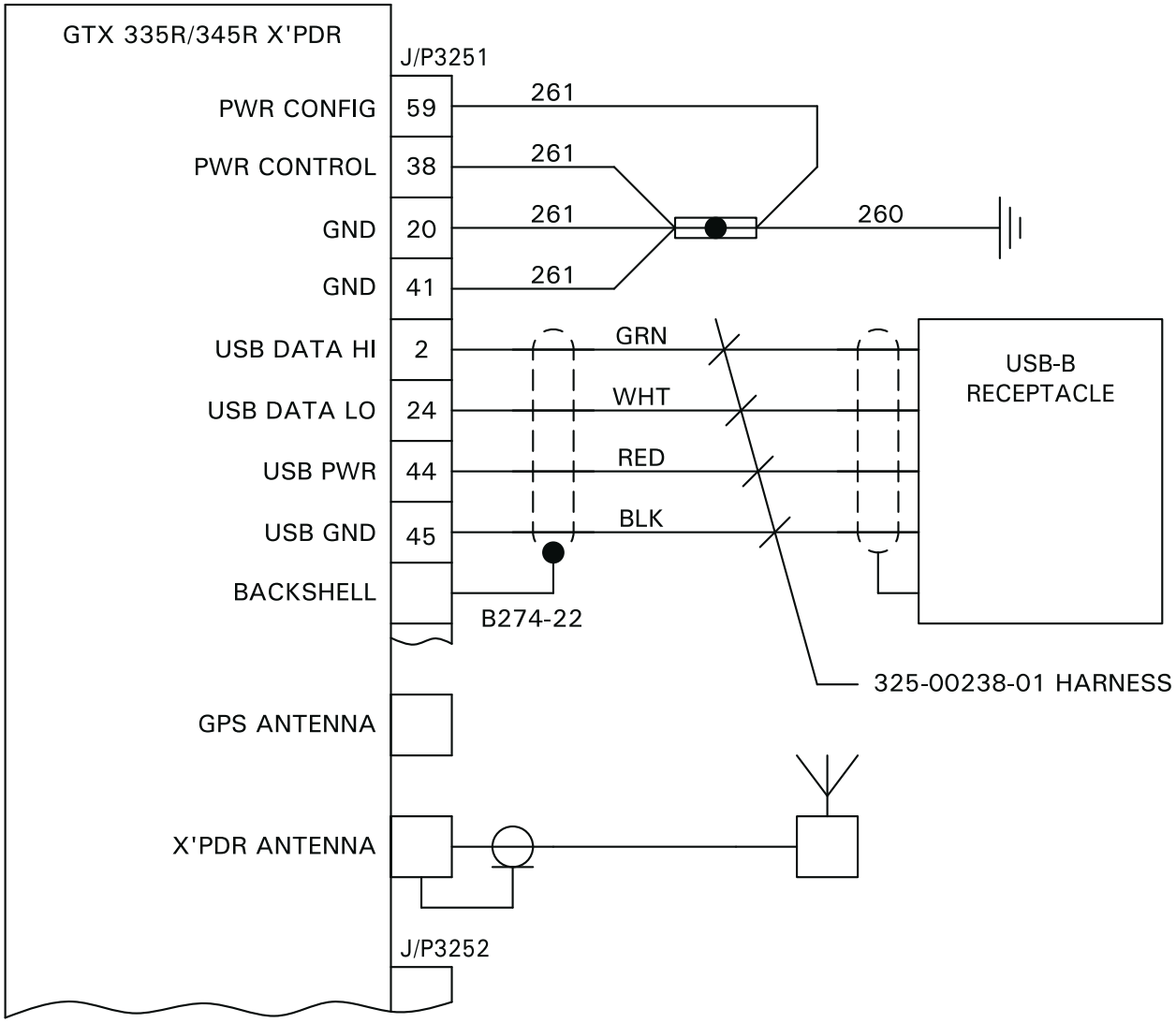

FIGURE 98-15 GARMIN GTX 345R TRANSPONDER INSTALLATION

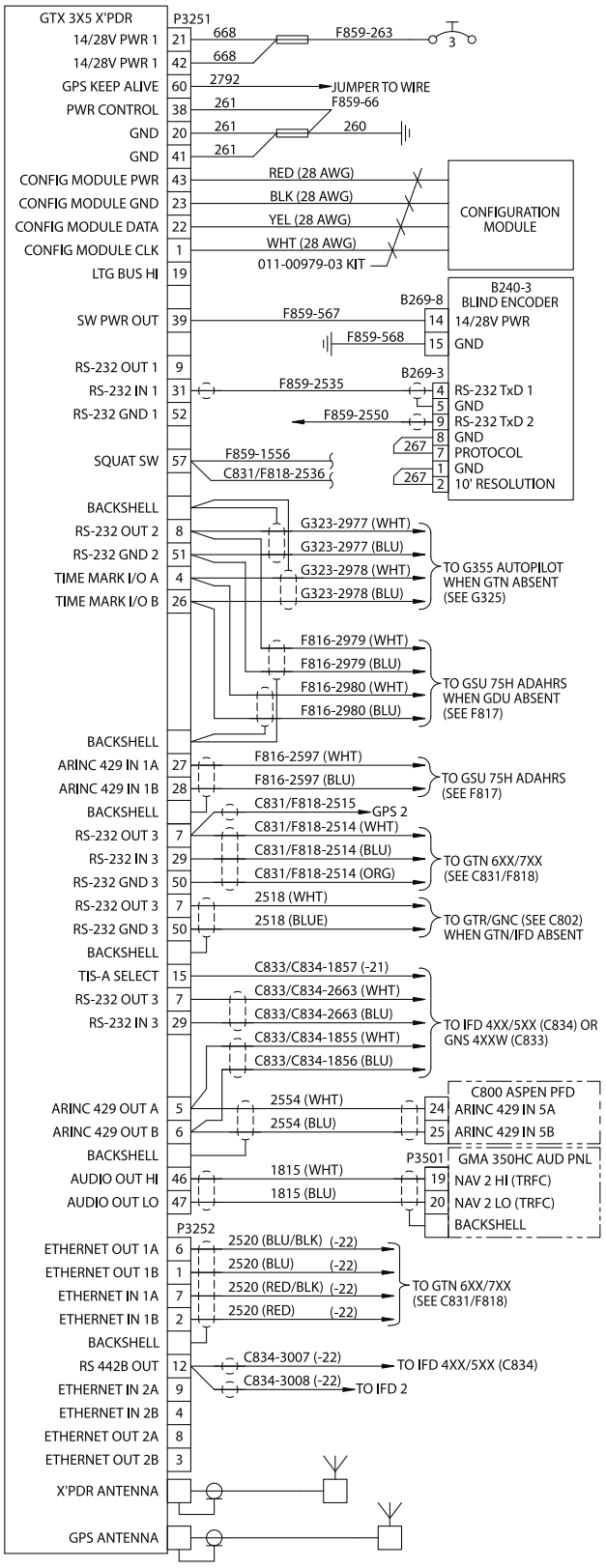

C804 REV AE

FIGURE 98-15A GARMIN GTX 3X5 TRANSPONDER INSTALLATION (C804 REVISION AE)

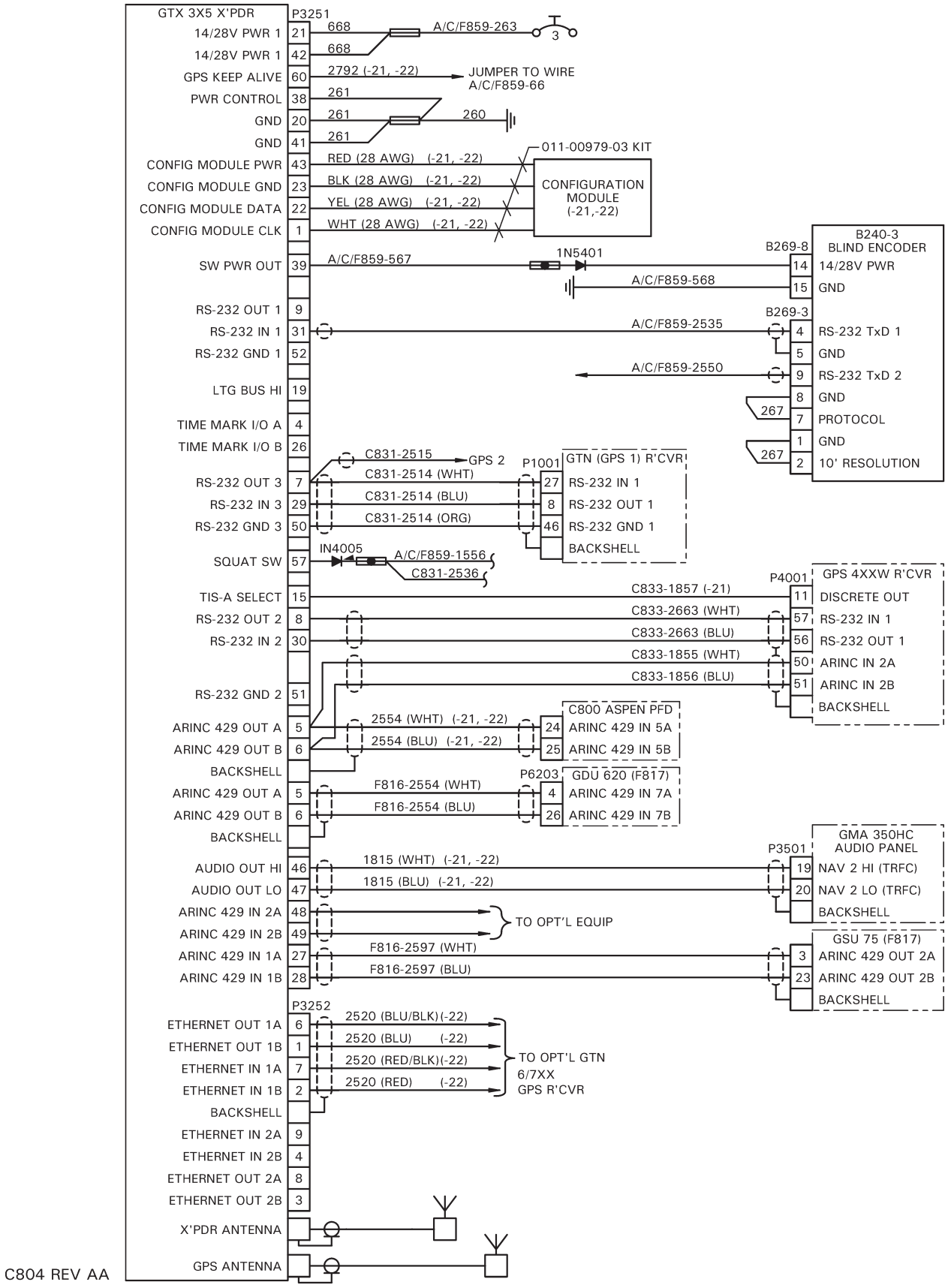

C804 REV AA

FIGURE 98-15B GARMIN GTX 3X5 TRANSPONDER INSTALLATION (C804 REVISION AA)

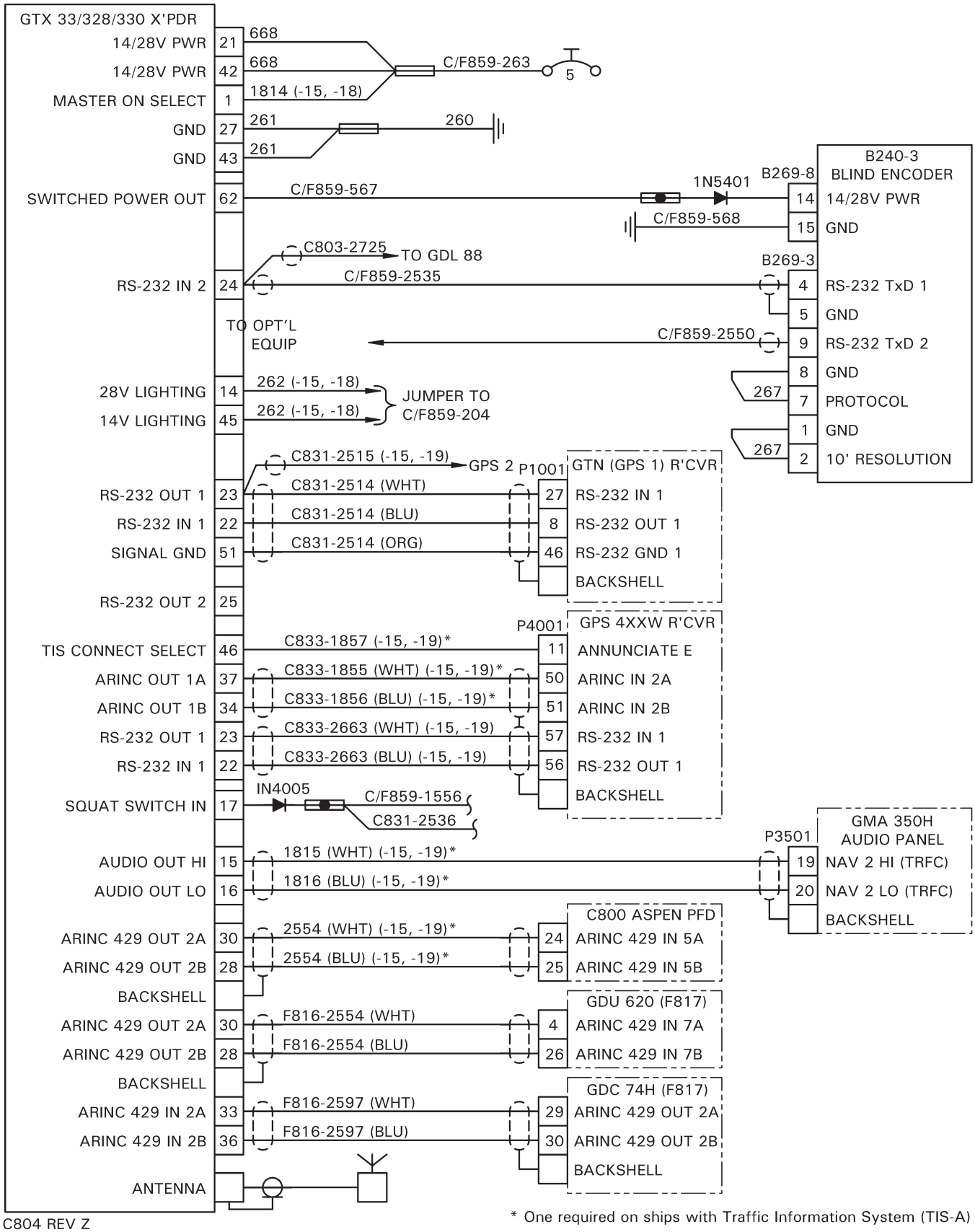

FIGURE 98-16 GARMIN GTX 33/328/330 ES TRANSPONDER INSTALLATION

Intentionally Blank

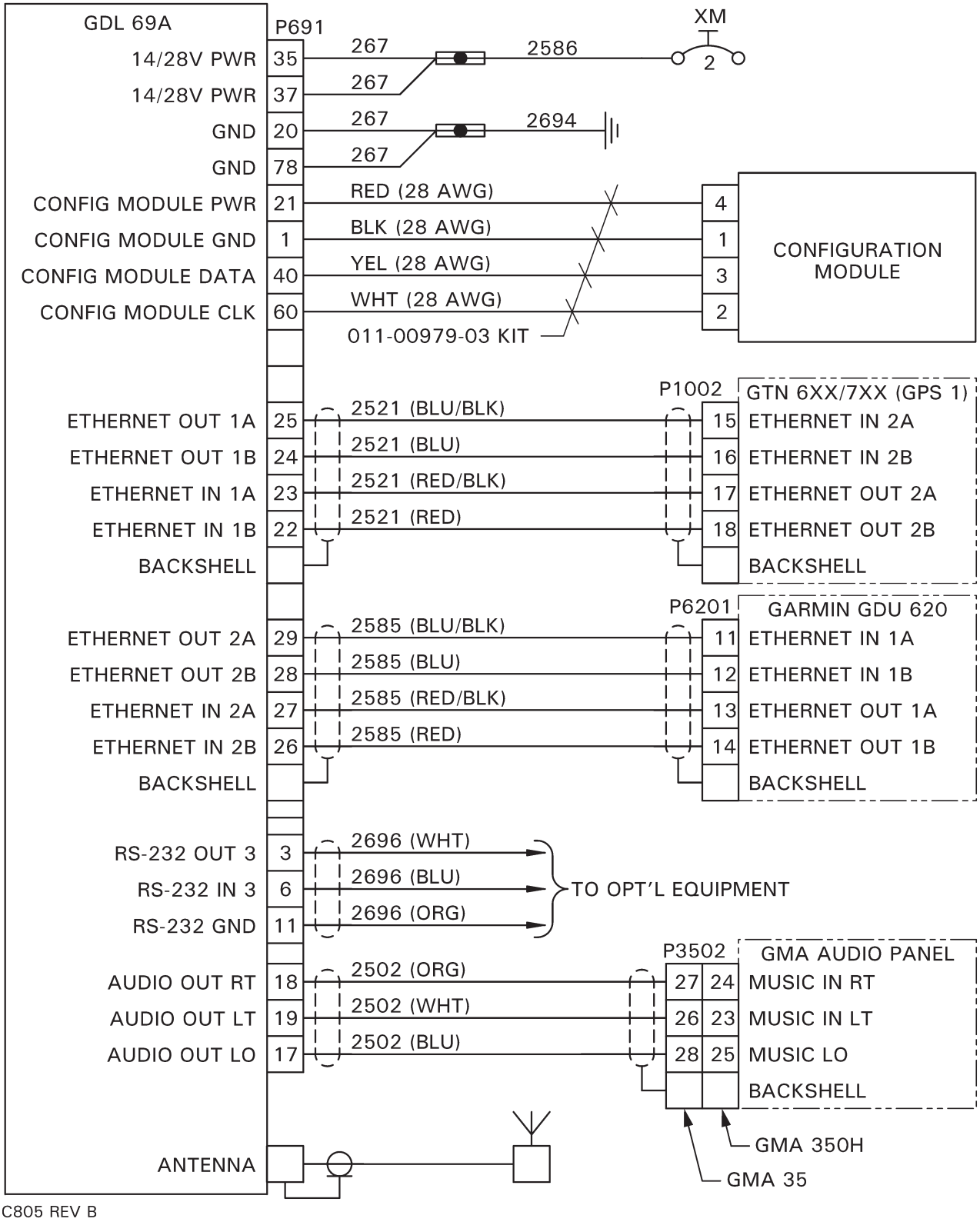

FIGURE 98-17 GARMIN GDL 69A XM RECEIVER INSTALLATION

Intentionally Blank

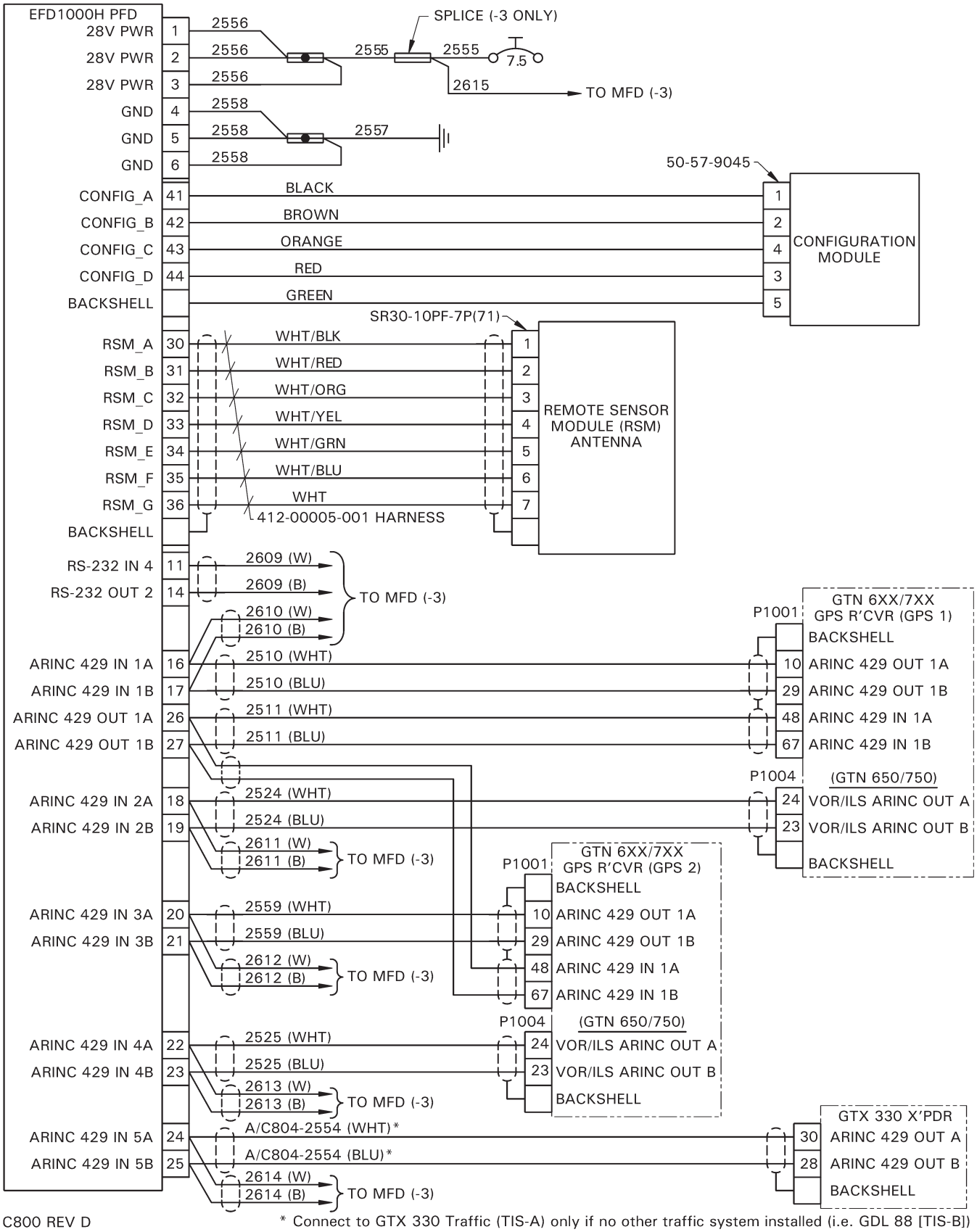

FIGURE 98-18 ASPEN EFD1000H DISPLAY INSTALLATION

Intentionally Blank

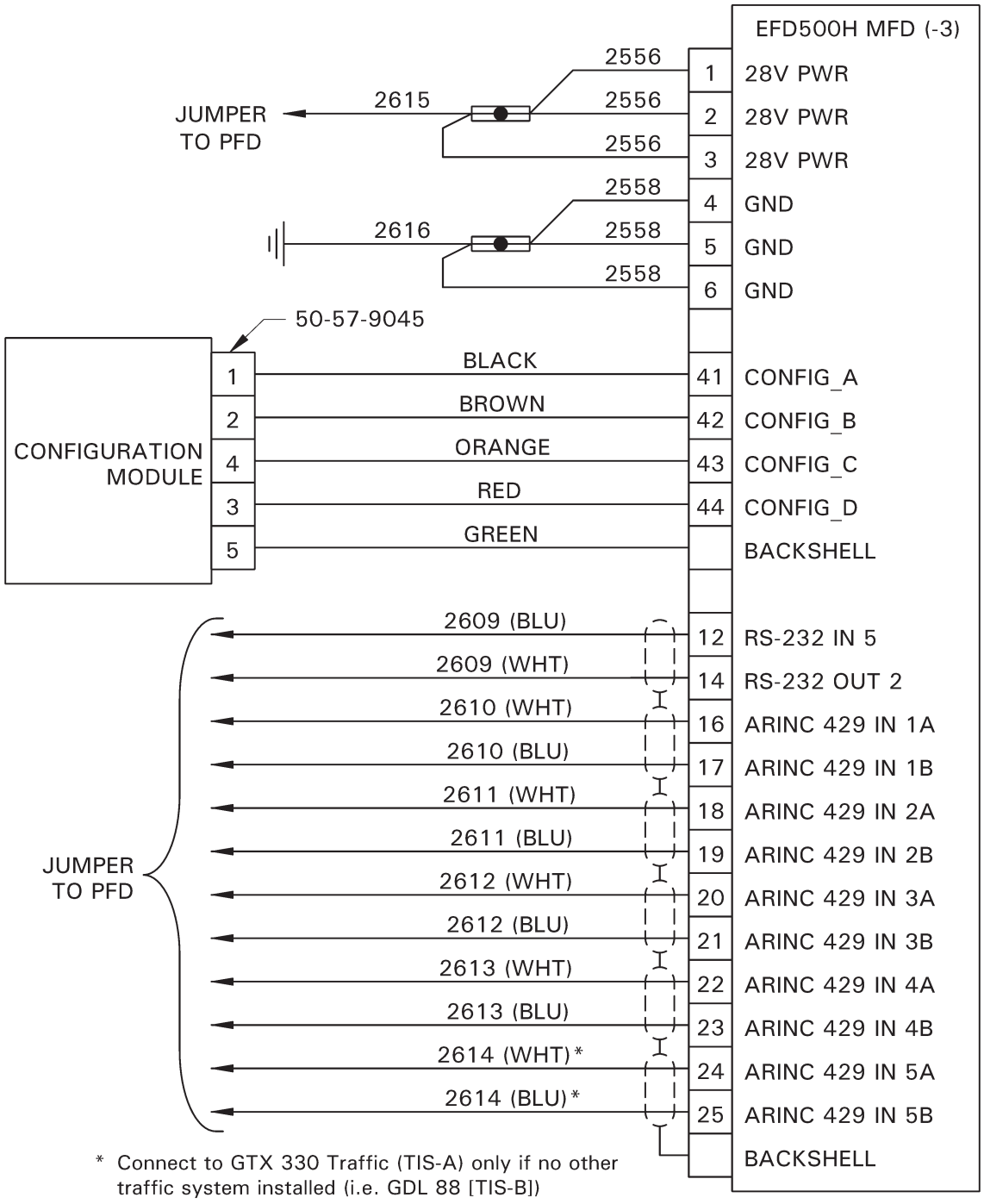

FIGURE 98-19 ASPEN EFD500H DISPLAY INSTALLATION

Intentionally Blank

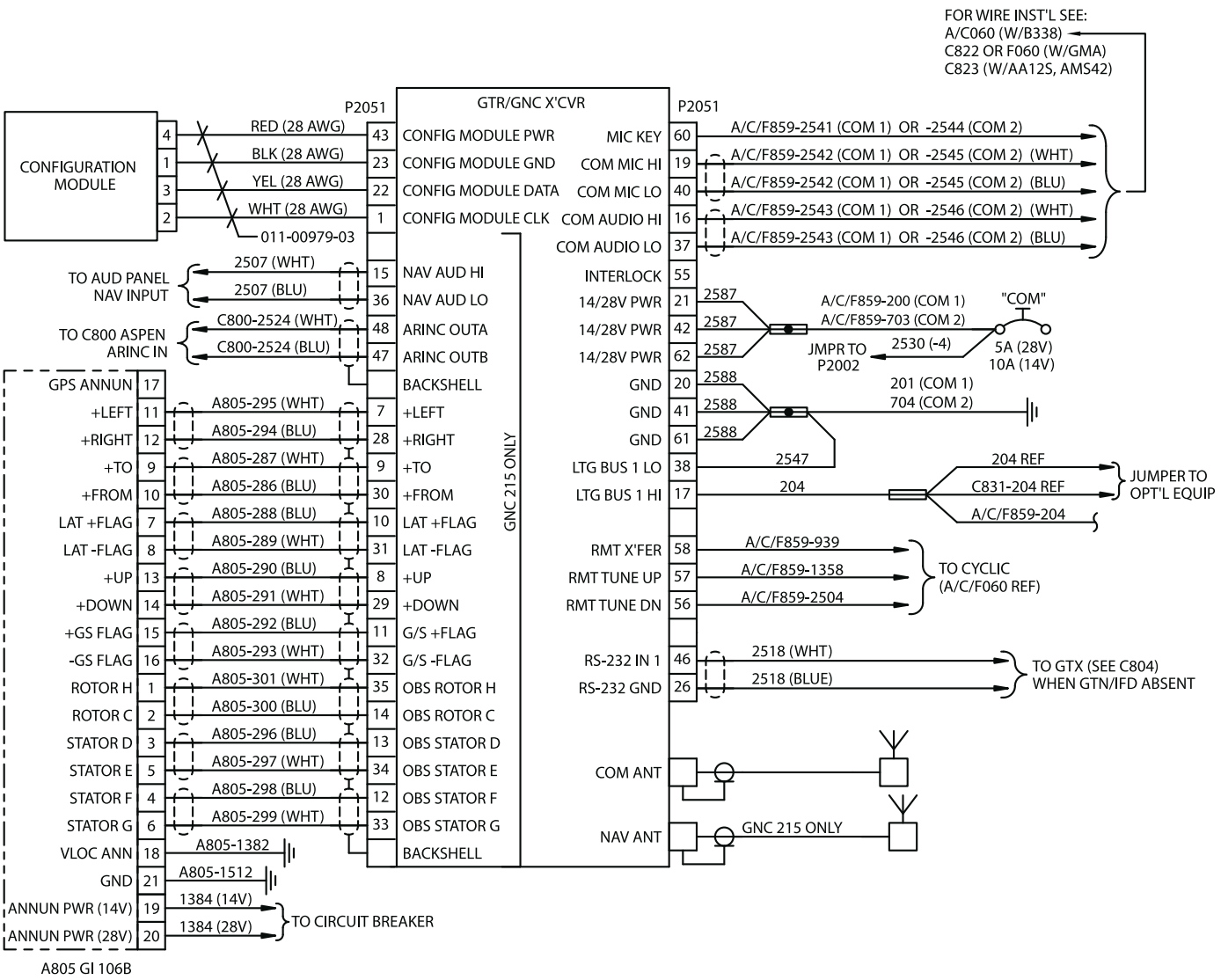

C802 -5, -6, -7 REV. G

FIGURE 98-20 GARMIN GTR 205 COM / GNC 215 NAV/COM RADIO INSTALLATION

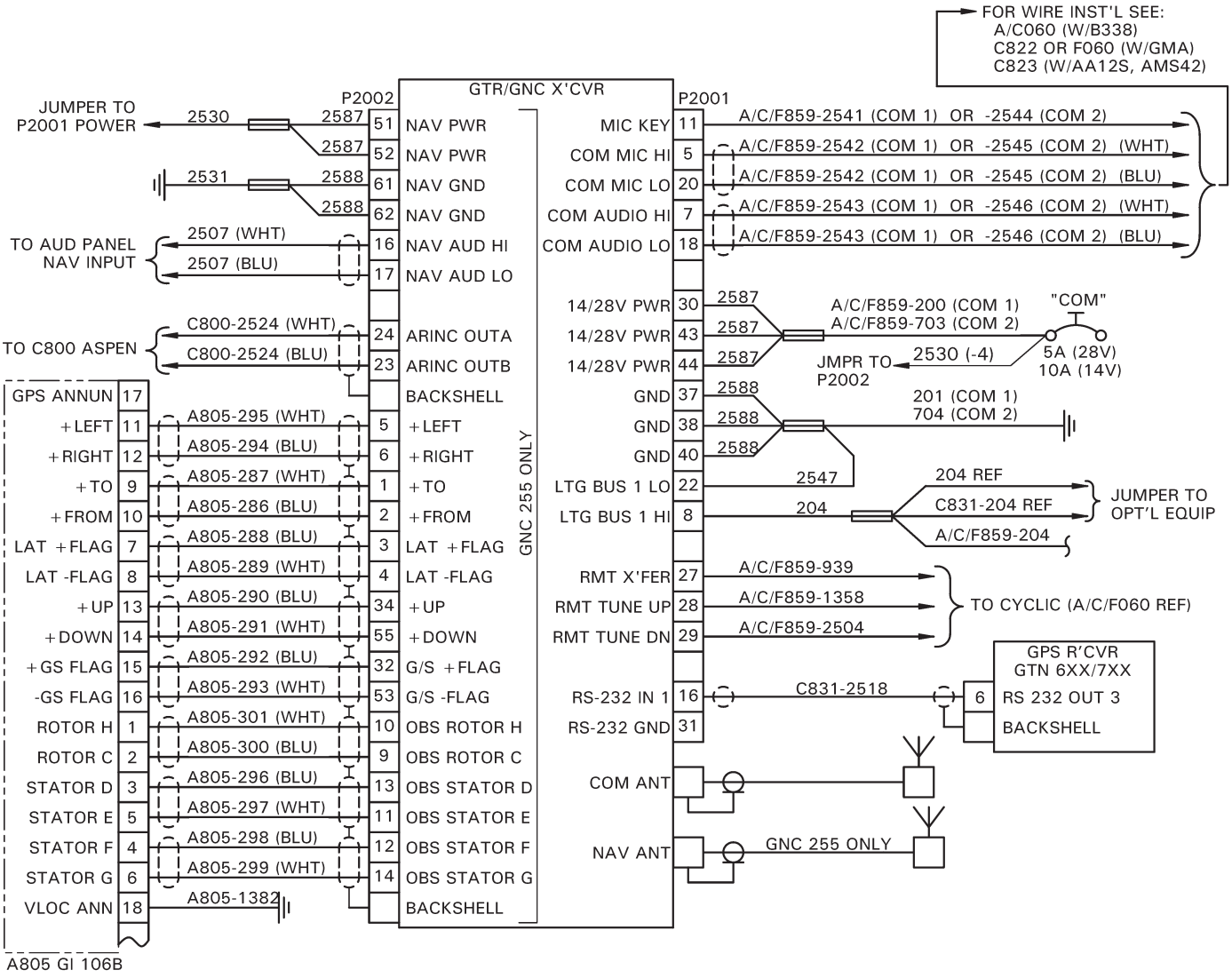

C802-2, & -4 REV E

FIGURE 98-20A GARMIN GTR 225B COM / GNC 255B NAV/COM RADIO INSTALLATION

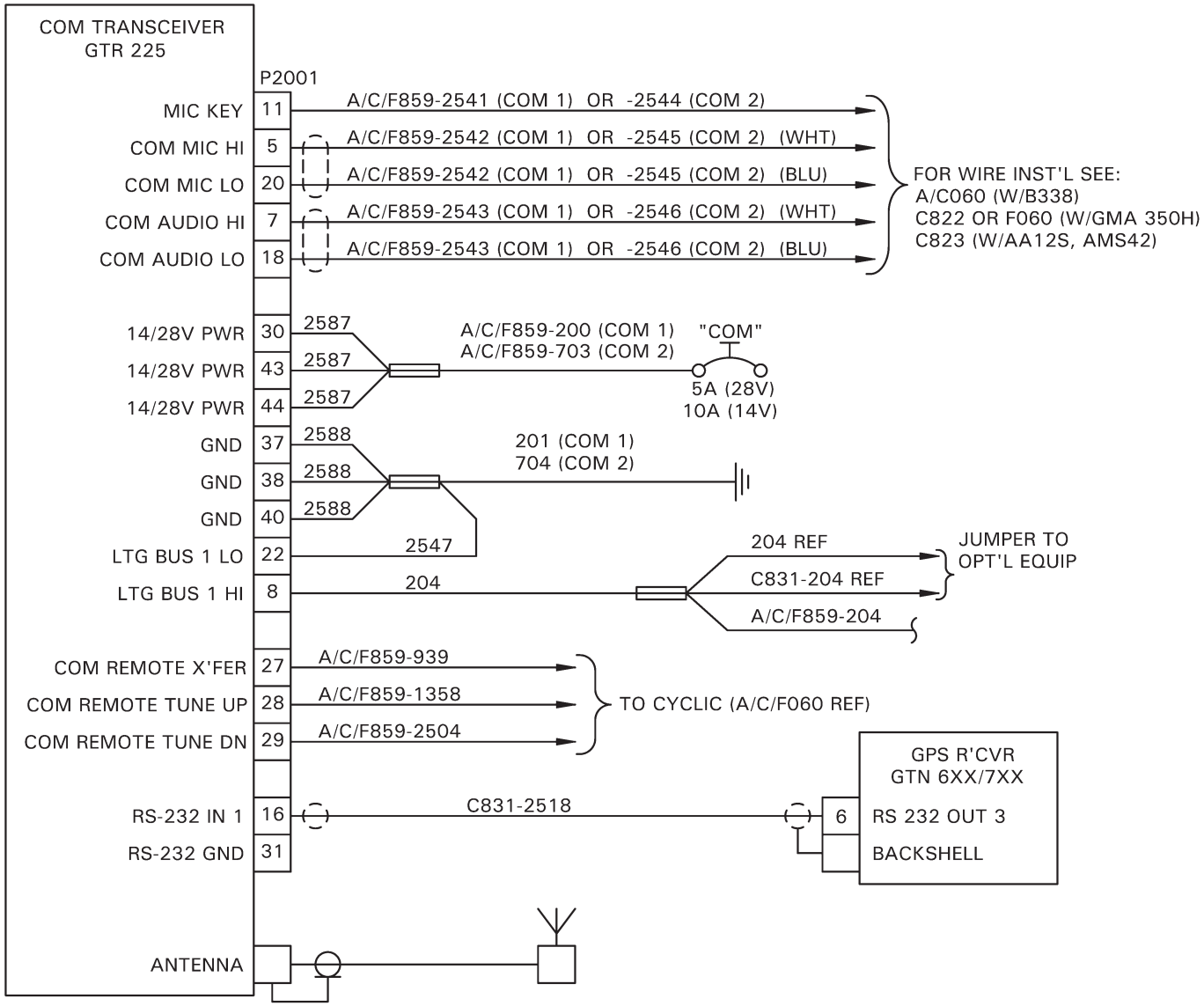

C802-2 REV D

FIGURE 98-21 GARMIN GTR 225B COM RADIO INSTALLATION

Intentionally Blank

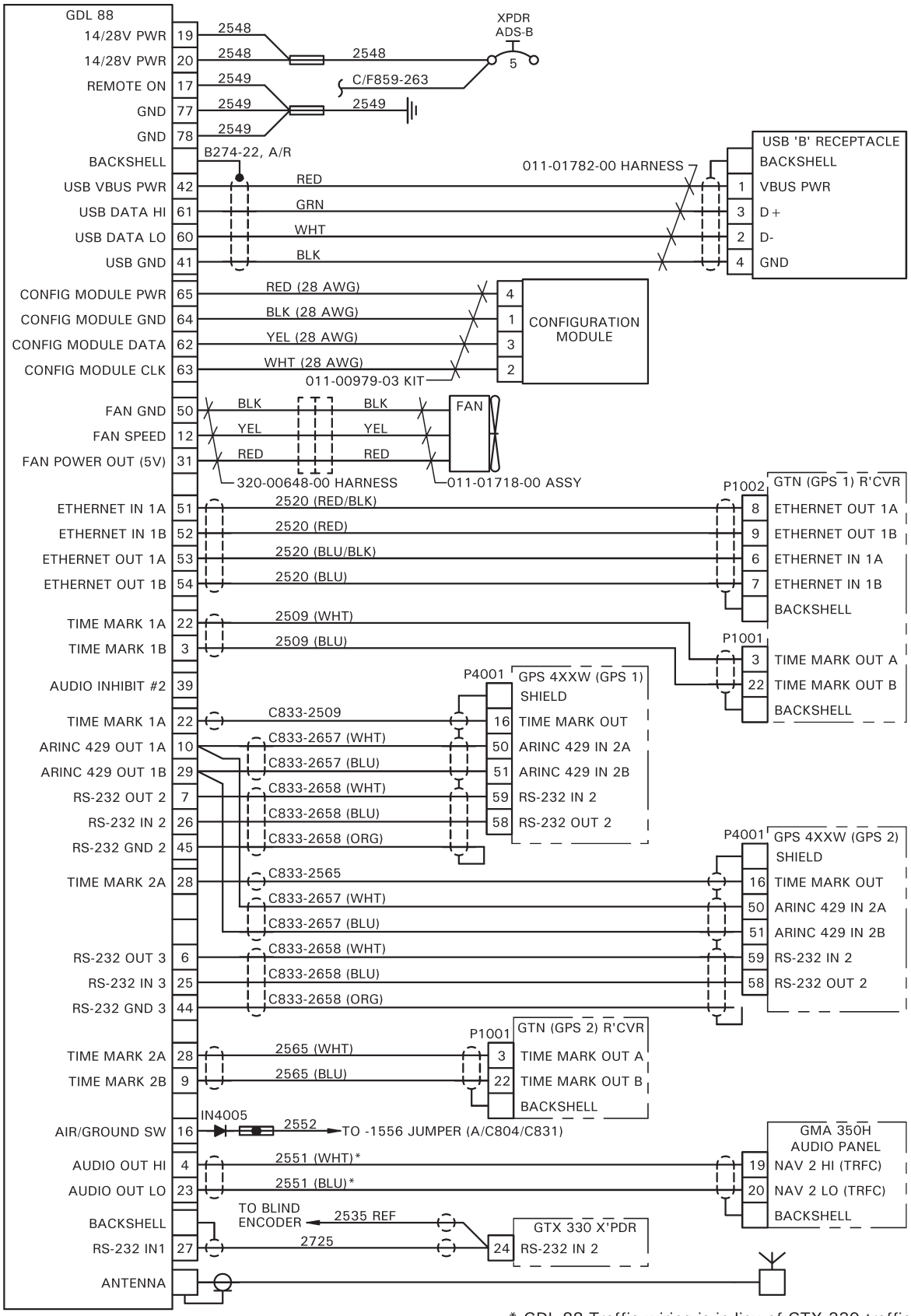

FIGURE 98-22 GARMIN GDL 88 ADS-B IN RECEIVER INSTALLATION

Intentionally Blank

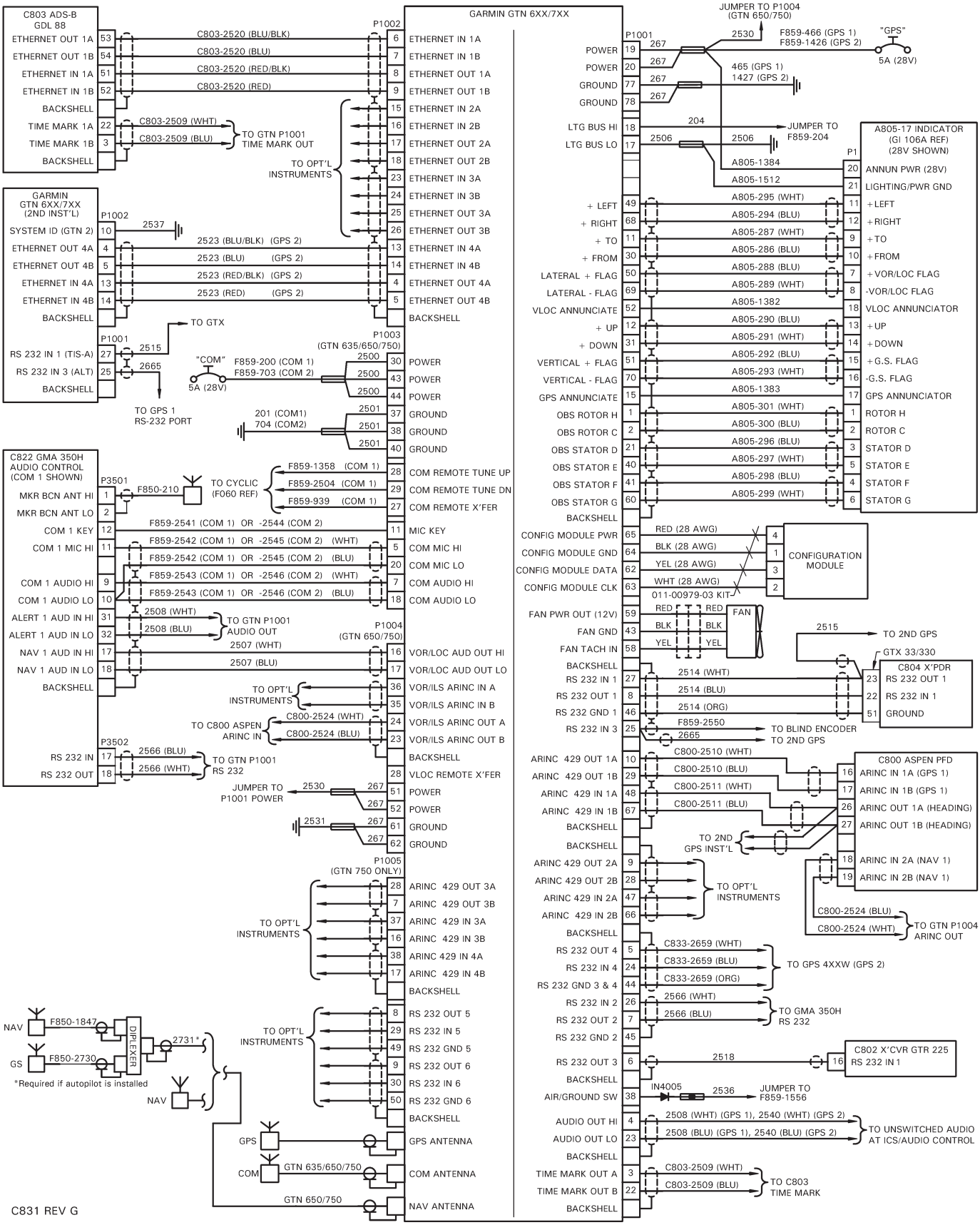

FIGURE 98-23 GARMIN GTN 6XX/7XX-SERIES GPS INSTALLATION (PILOT-SIDE CONSOLE)

Intentionally Blank

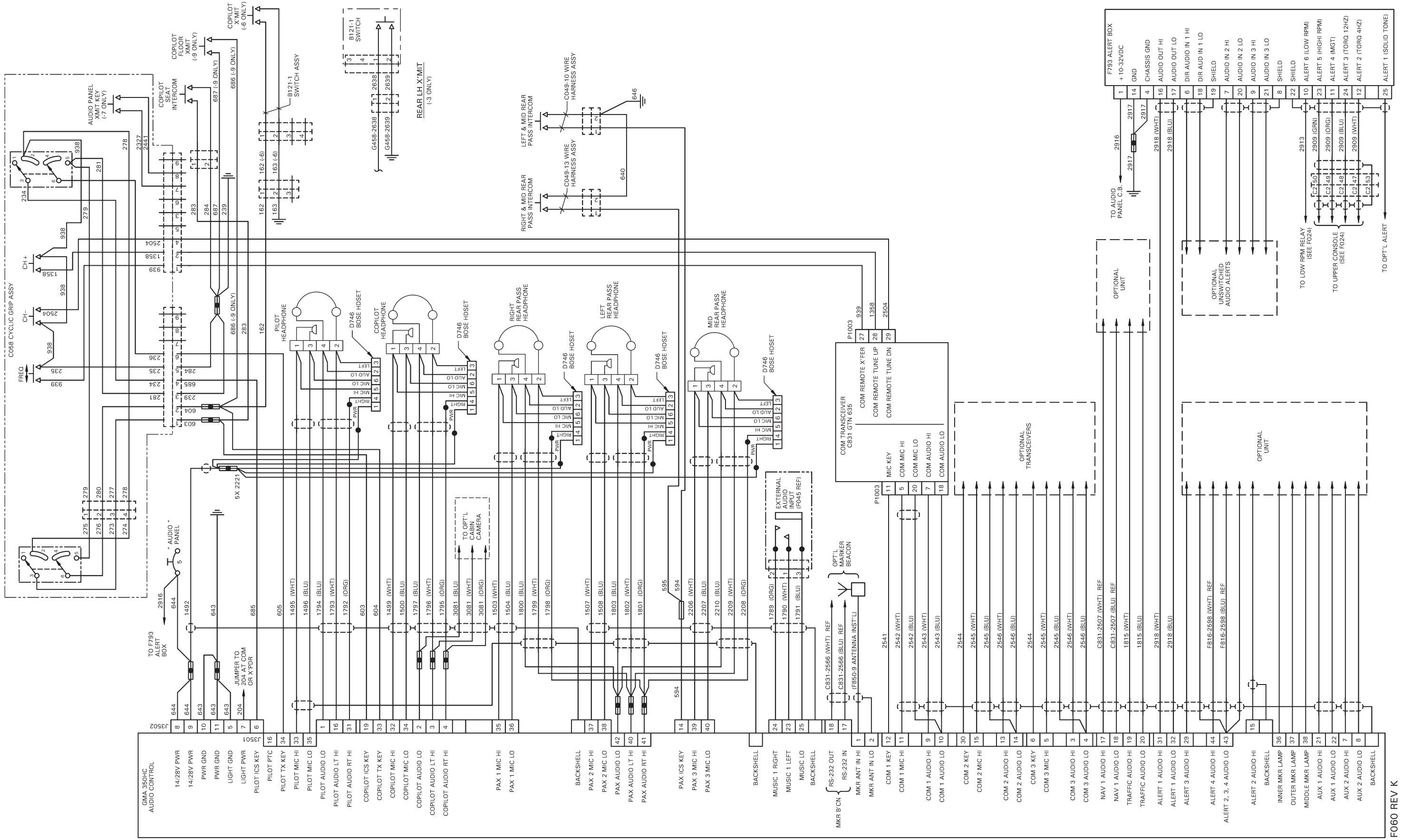

FIGURE 98-24 F060 INTERCOM SYSTEM INSTALLATION (GARMIN GMA 350HC AUDIO CONTROL)

Intentionally Blank

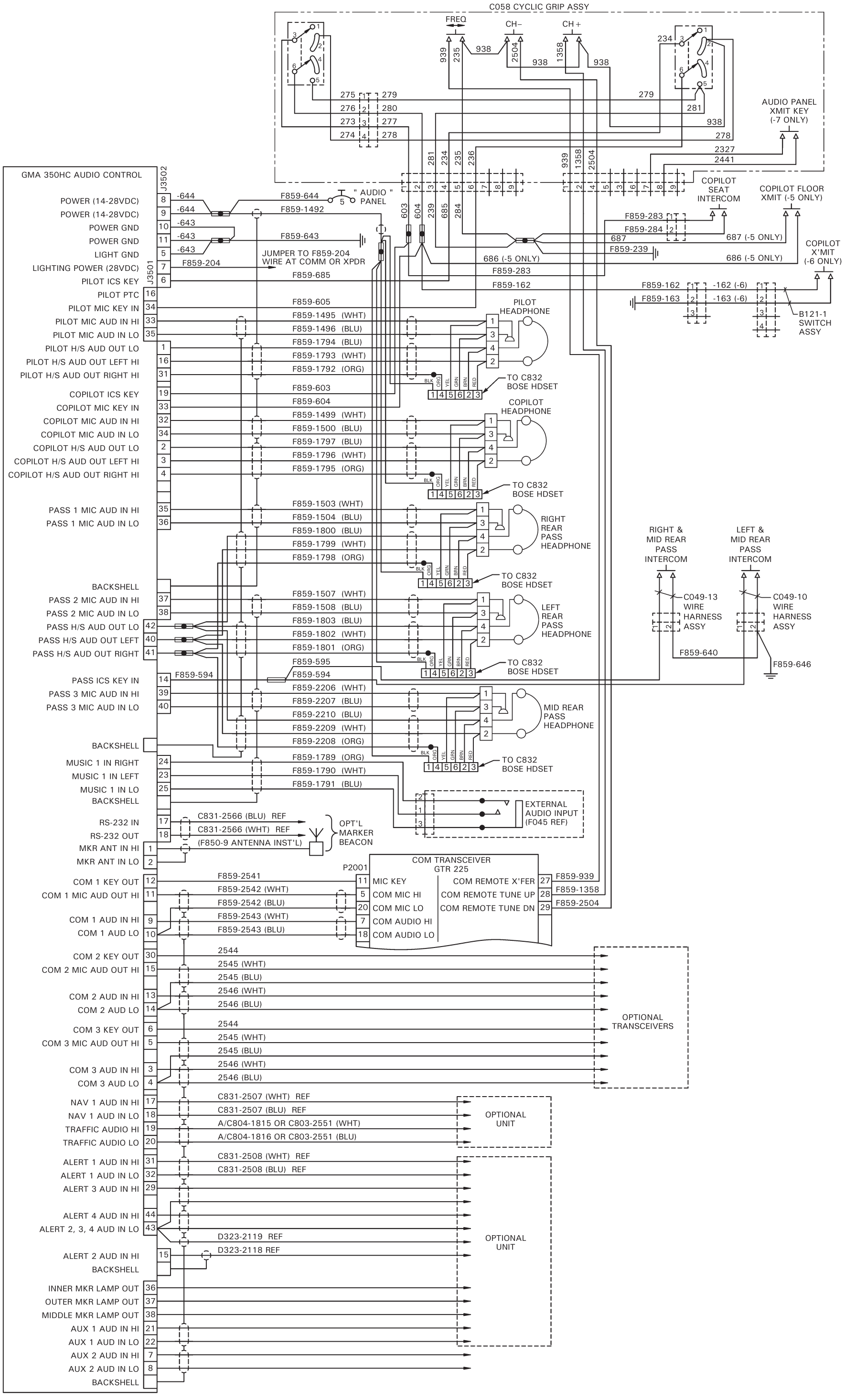

FIGURE 98-25A F060-4, -5, -6, & -7 INTERCOM SYSTEM INSTALLATION (GARMIN GMA 350HC AUDIO CONTROL)

F060-4,5,6 & -7 REV I

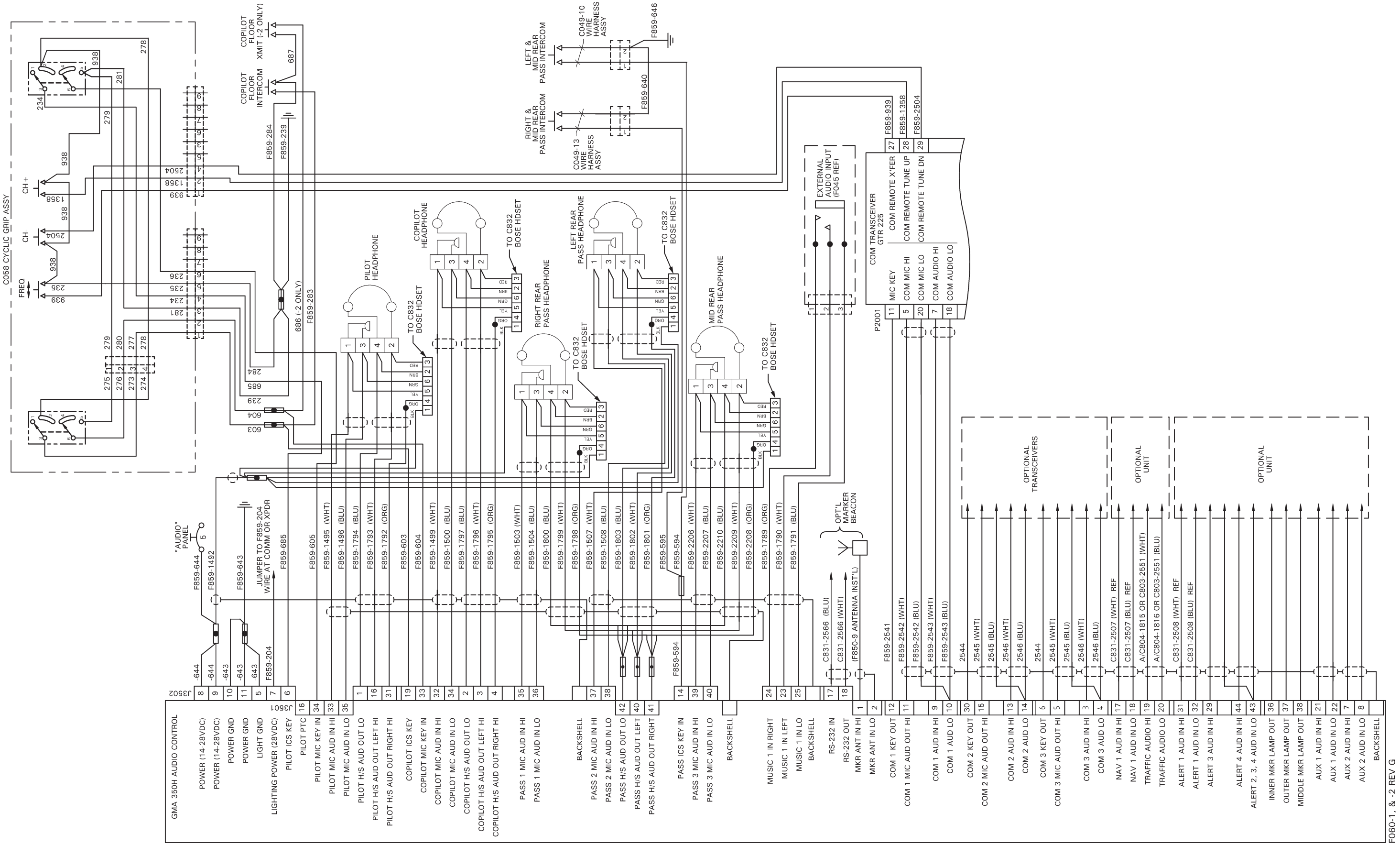

FIGURE 98-25B F060-1 & -2 INTERCOM SYSTEM INSTALLATION (GARMIN GMA 350H AUDIO CONTROL)

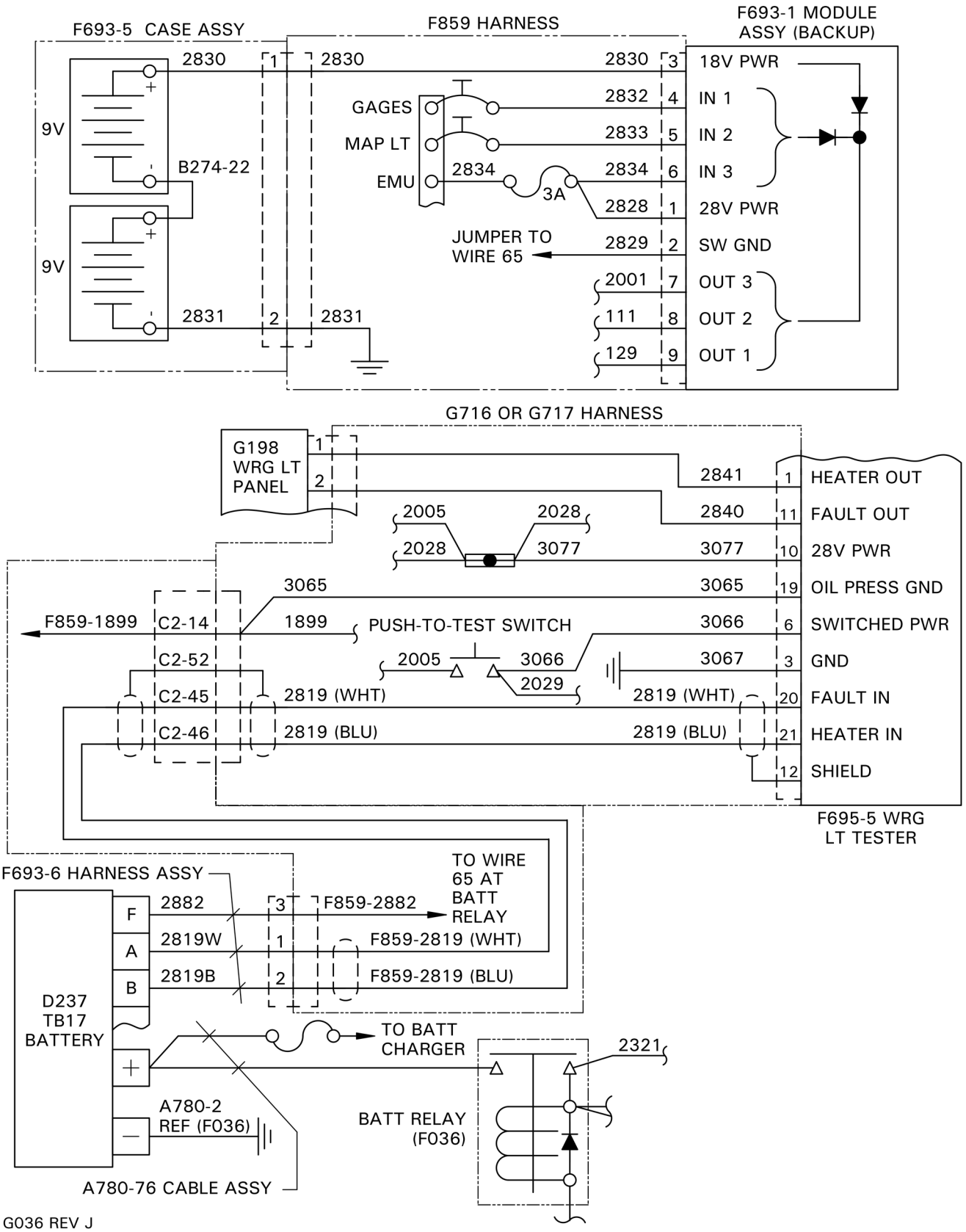

FIGURE 98-26 LITHIUM-ION BATTERY INSTALLATION
(Ships equipped with G198-7 warning light panel.)

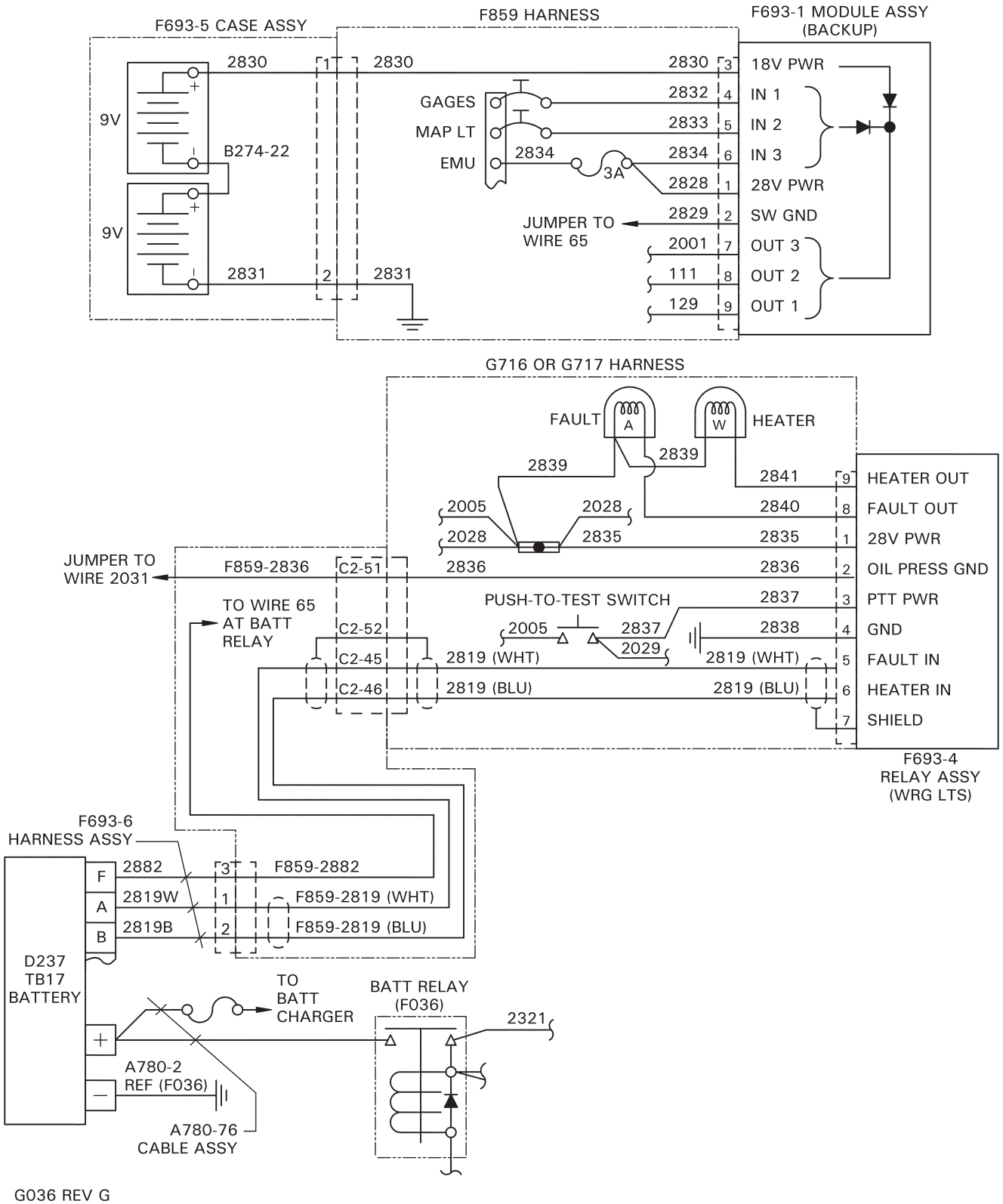

FIGURE 98-26A LITHIUM-ION BATTERY INSTALLATION
(Ships equipped with G198-1 warning light panel.)

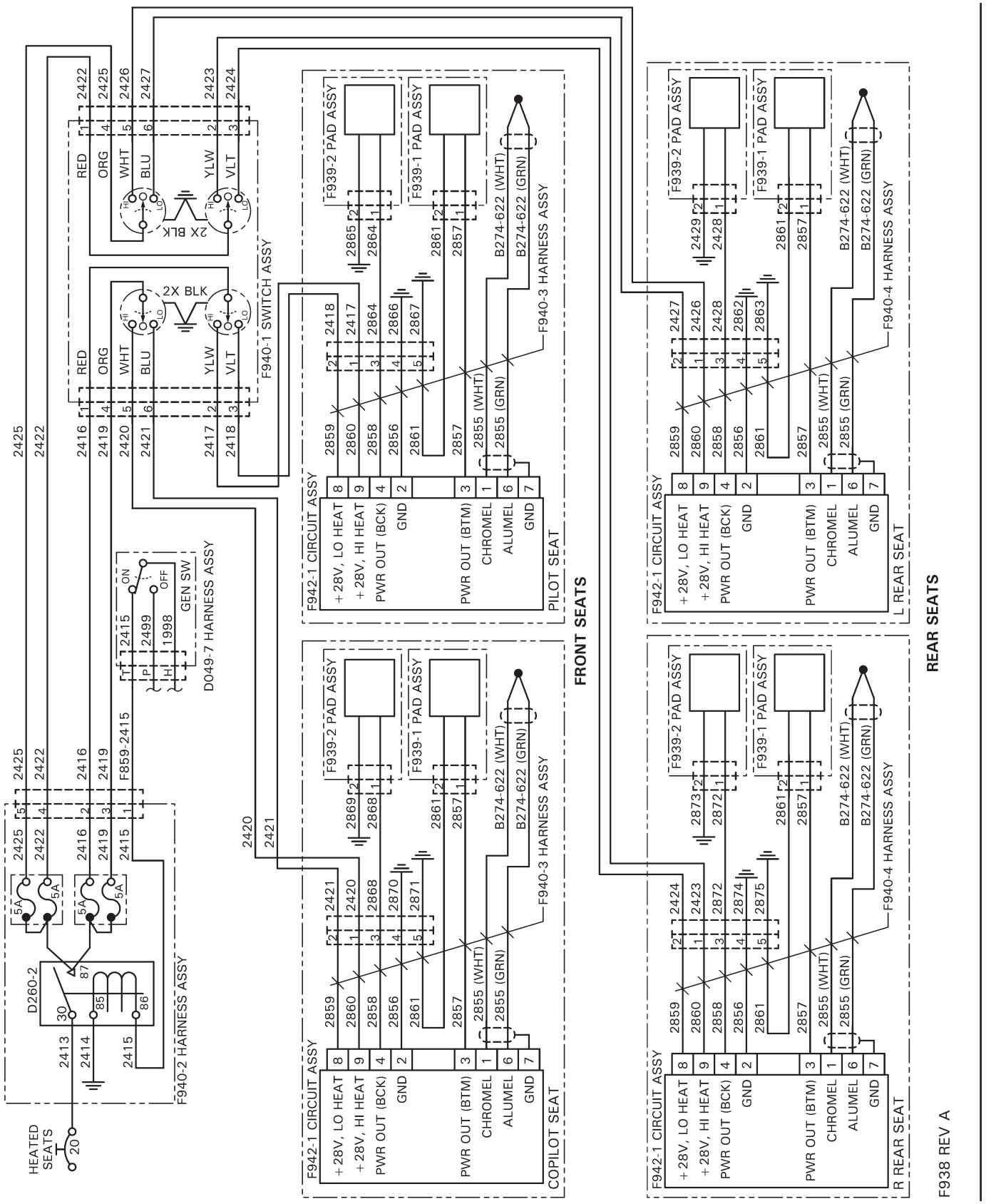

FIGURE 98-27 HEATED SEATS INSTALLATION

Intentionally Blank

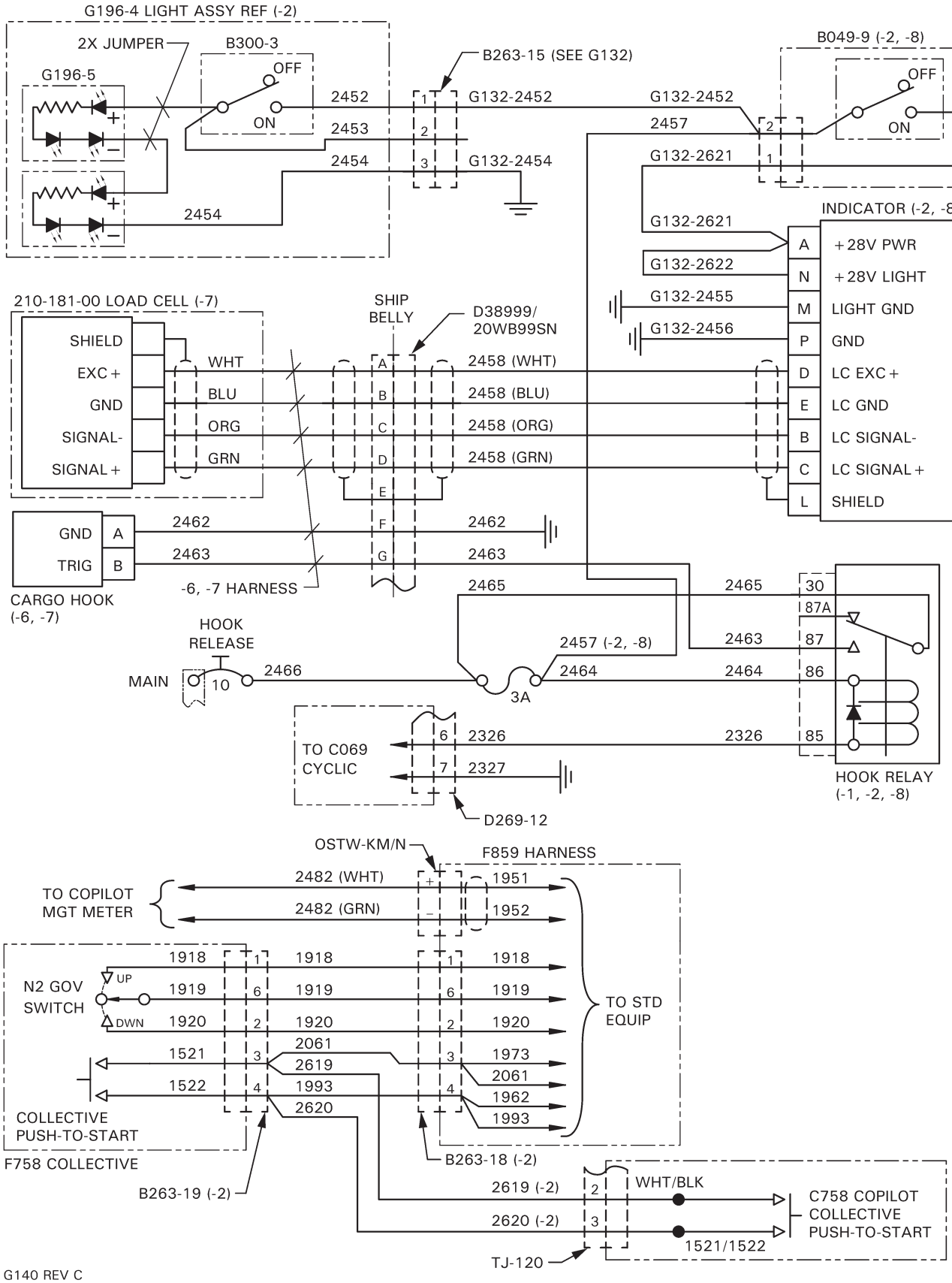

FIGURE 98-28 CARGO HOOK INSTALLATION

Intentionally Blank

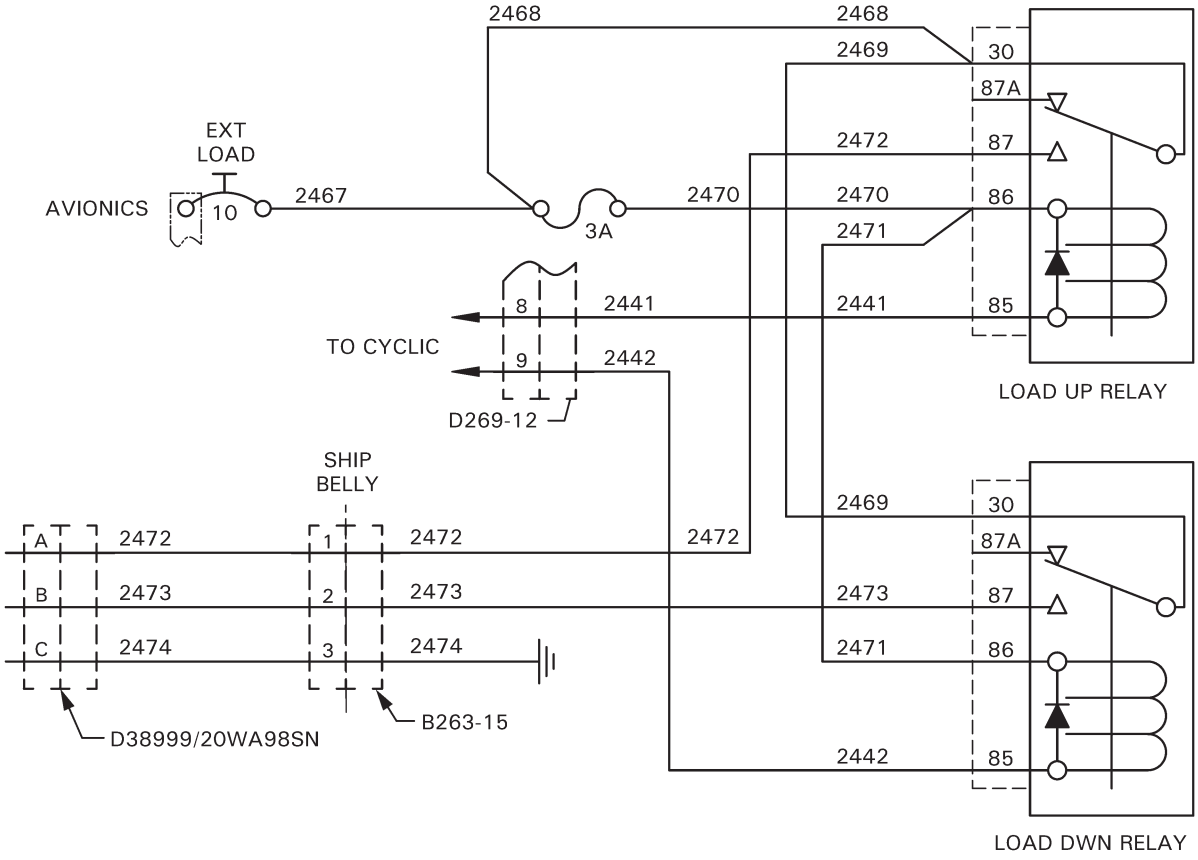

G140 REV C

FIGURE 98-29 EXTERNAL LOAD CONTROLS

Intentionally Blank

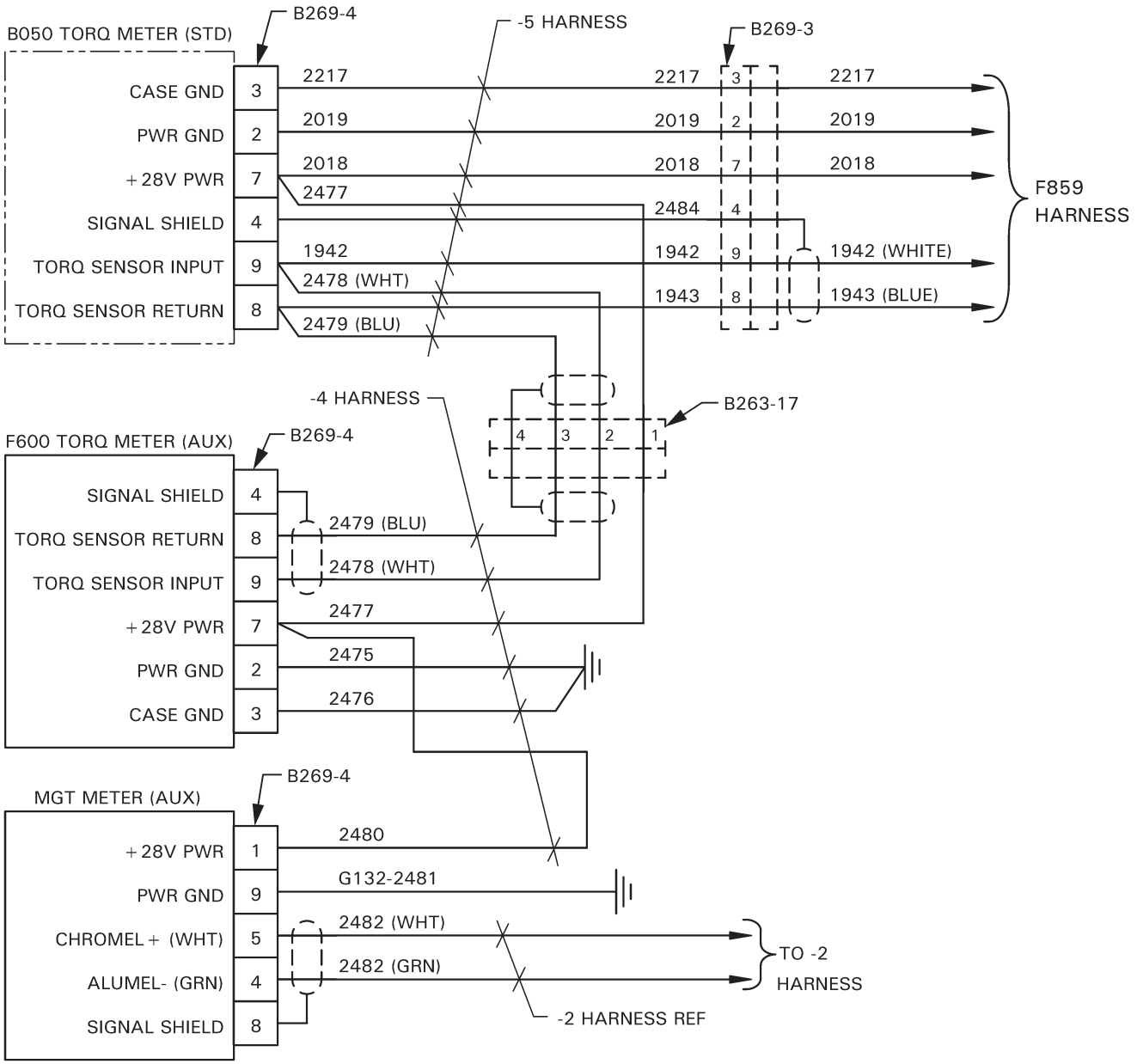

G140 REV C

FIGURE 98-30 COPILOT INSTRUMENTS INSTALLATION

Intentionally Blank

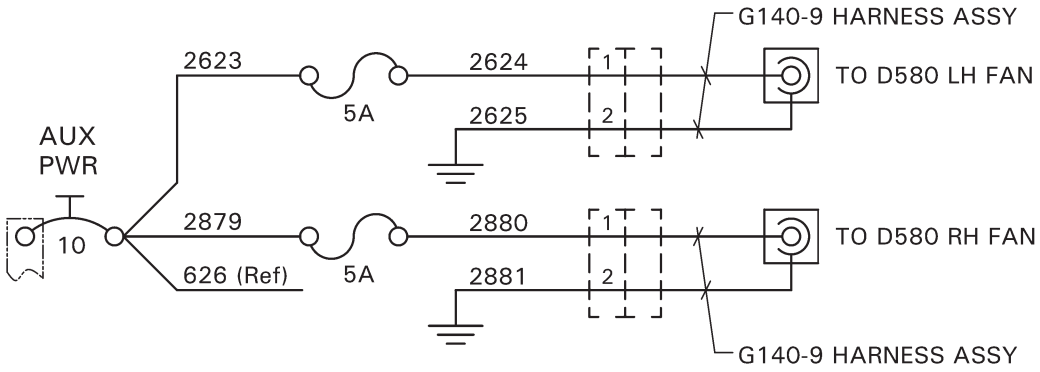

G140 REV C

FIGURE 98-31 BUBBLE DOOR FANS INSTALLATION

Intentionally Blank

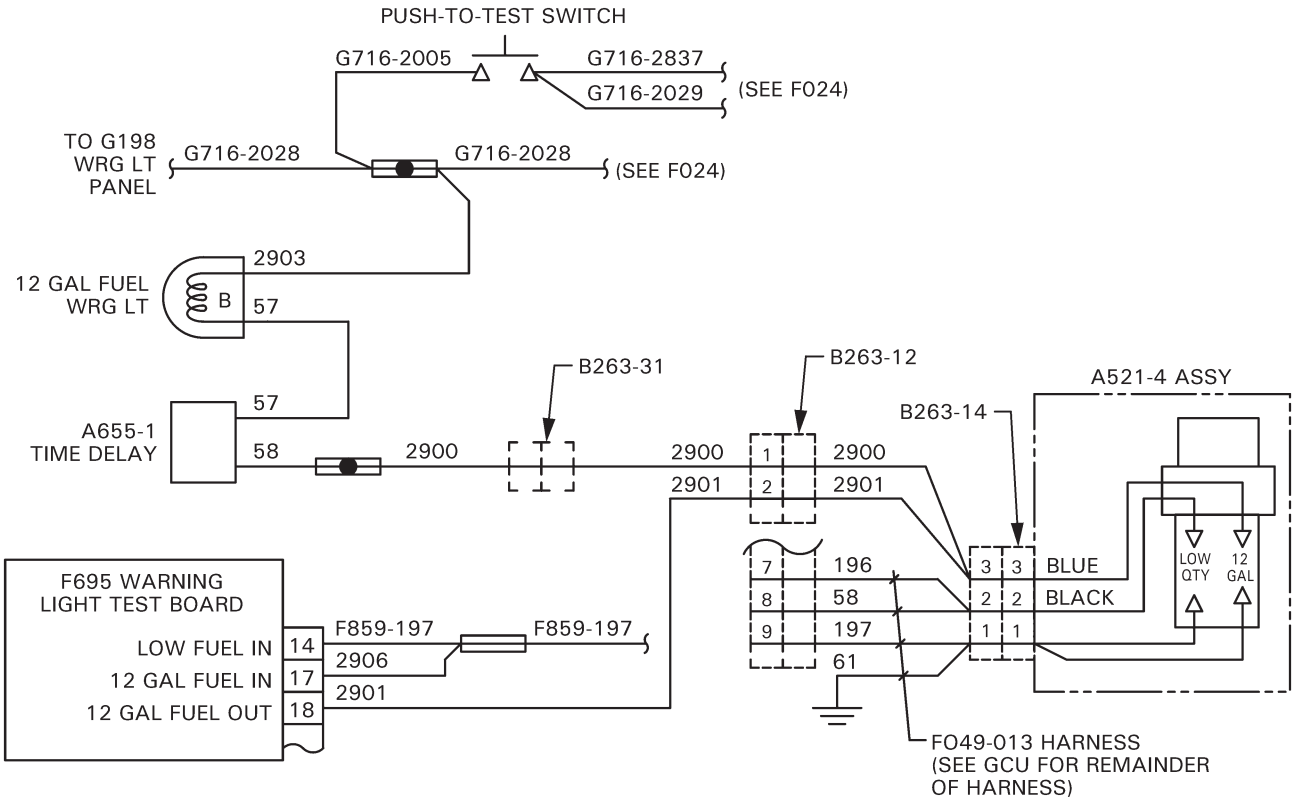

G806 REV A

FIGURE 98-32 DUAL LOW FUEL WARNING LIGHT INSTALLATION

Intentionally Blank

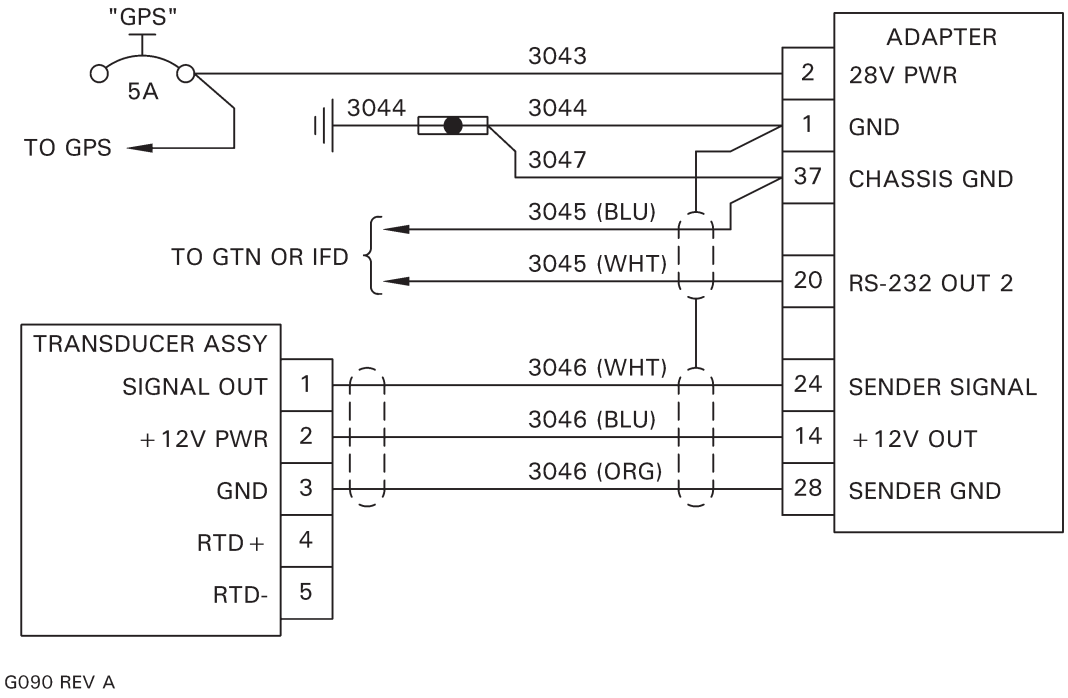

G090 REV A

FIGURE 98-33 FUEL FLOW METER INSTALLATION

Intentionally Blank

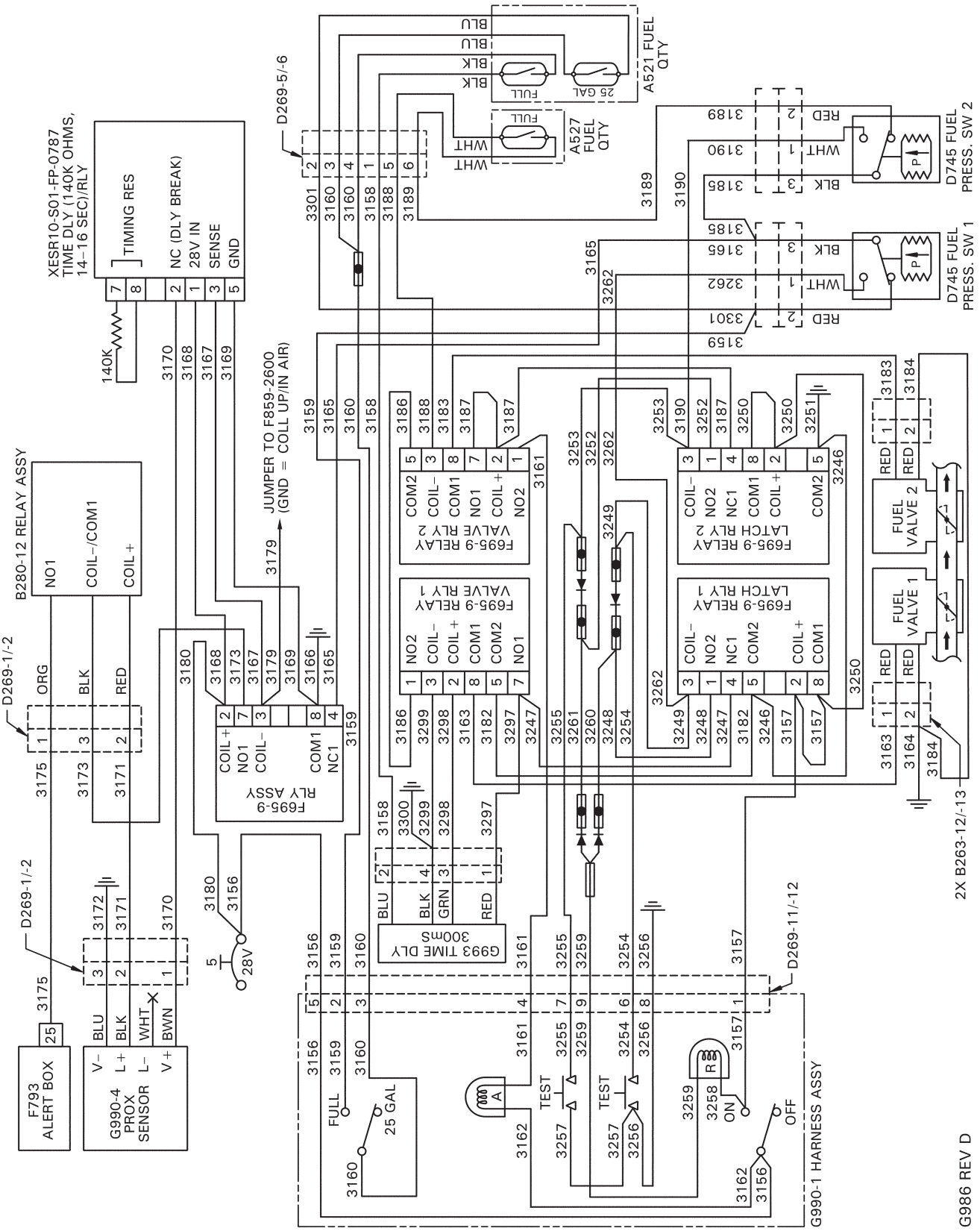

FIGURE 98-34 PRESSURE FUELING SYSTEM INSTALLATION (OPTIONAL)

Intentionally Blank