R66 ILLUSTRATED PARTS CATALOG
RTR 660 VOLUME II

Production Certificate Number 424WE

Type Certificate Number R00015LA

Robinson Helicopter Company	Phone:	(310) 539-0508
2901 Airport Drive	Fax:	(310) 539-5198
Torrance, California 90505-6115	Web:	https://robinsonheli.com
United States of America		

OFFICE HOURS

Monday through Friday, 6:00 a.m. to 6:00 p.m., Pacific Time.

CUSTOMER SUPPORT AND SPARES ORDERS

Please visit our website https://robinsonheli.com/support for the latest customer support contact information. You can also find a map of our global dealers and service centers that will be able to assist at https://robinsonheli.com/dealers-and-service-centers.

PUBLICATIONS

Viewing RHC Maintenance Manuals (MMs) and Illustrated Parts Catalogs (IPCs) online at https://robinsonheli.com/publications is recommended to ensure use of current data. Viewing MMs and IPCs offline via paper or digital download requires verification that the data is current. Refer to the online MM or IPC Revision Log for the list of current pages.

SUBSCRIPTION ORDER AND RENEWAL FORMS

Subscription order and renewal forms are located at https://robinsonheli.com.

WARRANTY INFORMATION

Helicopter and parts warranty information is located at https://robinsonheli.com.

TRADEMARK ACKNOWLEDGMENTS

All trademarks and registered trademarks are the property of their respective owners. Reference to any specific commercial products, process, or service by trade name, trademark, or manufacturer does not necessarily constitute or imply its endorsement.

NOTE

Failure to include the ® or ™ symbols or to capitalize specific brand names within the body of this manual does not constitute a waiver of the trademark rights by the respective owners.

- CherryMAX® is a registered trademark of Cherry Aerospace.
- Heli-Coil® is a registered trademark of Böllhoff Group.
- Loctite®, Alodine®, and BONDERITE® are registered trademarks of Henkel AG & Co. KGaA.
- LPS® is a registered trademark of ITW Pro Brands.
- Molykote® is a registered trademark of DuPont Specialty Products USA, LLC.
- Palnut® is a registered trademark of A. Raymond Tinnerman.
- Scotch-Brite™ is a trademark of 3M Company.
- Teflon™ is a trademark of The Chemours Company FC, LLC.
- Ty-Rap® is a registered trademark of ABB Installation Products.

CHAPTER LIST

	Introduction
Chapter 6	Dimensions and Descriptions
Chapter 8	Weight and Balance
Chapter 9	Ground Handling
Chapter 10	Parking and Storage
Chapter 11	Placards and Markings
Chapter 12	Servicing
Chapter 18	Track and Balance
Chapter 21	Environment Control
Chapter 22	Autopilot
Chapter 25	Furnishings
Chapter 28	Fuel System
Chapter 29	Hydraulics
Chapter 32	Landing Gear
Chapter 33	Lights
Chapter 52	Doors and Windows
Chapter 53	Fuselage
Chapter 62	Main Rotor
Chapter 63	Main Rotor Drive System
Chapter 64	Tail Rotor
Chapter 65	Tail Rotor Drive System
Chapter 67	Flight Controls
Chapter 71	Powerplant
Chapter 75	Engine Air Systems
Chapter 76	Engine Controls
Chapter 79	Engine Oil System
Chapter 90	Police Version
Chapter 92	E.N.G. Version
Chapter 95	Instrument System
Chapter 96	Electrical System
Chapter 97	Avionics
Chapter 99	Special Tools
Chapter 100	Revision Log

Intentionally Blank

TECHNICAL PUBLICATIONS

RECOMMENDED CHANGE REPORT

Please direct recommended changes to RHC Technical Publications via the email address listed below, by phone, or by submitting a duplicate of this completed form by fax or mail. Please include or have available the information detailed in this form.

Recommended changes may include but are not limited to general comments, corrections, omitted information, or clarification of instructions.

Please send recommendations to:

Email: techpubs@robinsonheli.com
Phone: (310) 539-0508
Fax: (310) 539-5198

Robinson Helicopter Company
Attention: Technical Publications
2901 Airport Drive
Torrance, CA 90505-6115
United States of America

Date: _____ Publication: _____

Name: _____ Chapter: _____

Company: _____ Section: _____

Helicopter Model: _____ Page: _____

Serial Number: _____ Revision: _____

Phone: _____

Email: _____

COMMENTS:

_____

_____

_____

_____

_____

_____

_____

_____

_____

Intentionally Blank

CATALOG FEATURES

INTRODUCTION

The Illustrated Parts Catalog (IPC) is used in conjunction with the R66 Maintenance Manual (MM) to provide instructions for continued airworthiness. The IPC identifies parts, components, and detail parts that make up, and are required to support the R66 helicopter. RHC uses a modified Air Transport Association (ATA) chapter structure to organize the various systems of the R66 Helicopter.

The catalog features:

1. A chapter list
2. A table of contents located in the front of the catalog
3. A table of contents at the front of each chapter

PART DESIGNATION

Robinson parts are designated with a part number prefix “A”, “B”, “C”, etc., followed by three digits and a dash number, such as A101-1. Robinson special tools are designated with a part number prefix “MT”. For standard hardware items such as bolts, nuts, screws, etc., “AN”, “MS”, and “NAS” part numbers are used. When a rivet length is not specified, length must be determined by the installer. In some instances, vendor part numbers are also used.

PARTS AVAILABILITY

"X" indicates part is available as a separate spares item.
"O" indicates part is no longer available, or only available as part of a higher assembly.

CHANGE BARS

Change bars are located on the outside edge of the page, and indicate new or revised data. Change bars between lines indicate data was removed, and parts renumbered as required. Change bars on figure pages indicate changes to the figure somewhere across the page in the area of the change bar. A change bar encompassing the figure title and item 1 indicates the figure number changed. Change bars that are the full length of the page indicate all new data, usually a new figure and parts data.

ABBREVIATIONS

Assy – assembly
A/R – as required
A.O.G. – Aircraft On Ground
Cont’d – continued
FCS – Flight Control System
Incl – includes
LH – left hand
max – maximum
min – minimum
MM – Maintenance Manual
MR – main rotor
OH/EXCH – Overhaul/Exchange
Ref – Part(s) “referenced” for clarity
rev. – Revision
RH – right hand
RHC – Robinson Helicopter Company
§ – Section
TR – Tail Rotor
TRDS – Tail Rotor Drive Shaft

ORDERING AND SHIPPING

All orders must include instructions for shipping.

WARRANTY

Helicopter and parts warranty information is located at https://robinsonheli.com, under customer support tab.

RETURNS

All parts or components shipped to RHC must include a signed Component Return/Authorization Form, which can be located at https://robinsonheli.com, under customer support tab. Return shipments must be prepaid.

No unused parts may be returned to RHC for credit if the parts show any indication whatsoever of use or damage. Parts returned within 30 days of purchase will be assessed a restocking fee. No parts may be returned after 30 days without prior RHC approval.

CATALOG FEATURES (Cont'd)

REVISIONS

RHC Illustrated Parts Catalogs (IPCs) are available digitally at https://robinsonheli.com, under the Publications tab. Access to these publications does not require an account and is free of charge.

Viewing the IPC online is recommended to ensure use of current data.

Viewing the IPC offline via paper or digital download requires verification that the data is current. Refer to the online IPC Revision Log for the list of current pages.

Alphabetical and numerical indices have been deleted.

Sign up for free email notification of revisions to IPCs by sending an email to subscriptions@robinsonheli.com with "Subscribe email" in the subject line. Within the email, include name, email address, physical address, and helicopter model(s) of interest.

HOW TO USE THE ILLUSTRATED PARTS CATALOG

The IPCs are available digitally at https://robinsonheli.com, under the Publications tab. Files are available in PDF format. A keyword or part number search may help to locate applicable data. Open the chapter or full book PDF and launch a "search" or "find" window (Ctrl + F [PC] or Command + F [Mac]).

A search by system may be performed when the part number is not known. Go to the Chapter List on page iii, and determine the appropriate chapter. In the Chapter Table of Contents, determine from Figure titles where the item may logically appear. On the selected Figure illustration, locate the item and corresponding item number, and verify the item number by reading the description. Be sure to read any notes (indicated by asterisk) to ensure item is current for your aircraft.

PART INTERCHANGEABILITY

The following parts are interchangeable. Unless noted otherwise, whenever one part is referred to in this catalog, its substitute part is also permitted.

PART:	INTERCHANGEABLE WITH:
110- __ Telatemp	F110-__ Telatemp
22K1-048 Cap nut	B340-10 Cap nut
22K1-82 Cap nut	B340-4 Cap nut
354601 Fuse block	D262-1 Fuse block
354602 Fuse block	D262-2 Fuse block
4509 & Q4509 Lamp	B196-26 Lamp
4591 Lamp	B196-27 Lamp
511TS1-3 Switch	B300-4 Switch
94830A030 Nut	21FKF-518 Nut
AN_ and MS_ part	AS_ part or A880 part numbers
AN340 Nut	MS35649 Nut per NASM35649 except AN340B8 Nut
AN340B8 Nut	B301-8 Nut
AN345 Nut	MS35650 Nut per NASM35650
AN364 Nut	MS21083 Nut per NASM21083
AN507 Screw	MS24693 Screw per NASM24693
AN509 Screw	MS24694 Screw per NASM24694
AN515 Screw	MS35206 Screw per NASM35206
AN515C Screw	MS51957 Screw
AN515UB6R6 Screw	B567-25 Screw
AN515UB6R10 Screw	B567-28 Screw
AN515UB8R10 Screw	B567-43 Screw
AN515UB8R12 Screw	B567-44 Screw
AN515UB8R20 Screw	MS35214-47 Screw per NASM35214
AN525 & AN526 Screw	MS27039C Screw per NASM27039, or B526-6 or -8 Screw and B527-08 Washer per R66 MM § 6-71. Except where noted.
AN814 & MS24391 Plug	AS5169 Plug
AN815 & MS24392 Union	AS5174 Union
AN818-__D Nut	AN818-__W Nut
AN819 & MS20819 Sleeve	AS5176 Sleeve
AN822 & MS20822 Elbow	AS5195 Elbow
AN823 & MS20823 Elbow	AS5196 Elbow
AN825 & MS20825 Tee	AS5197 Tee
AN826 & MS20826 Tee	AS5198 Tee
AN894 & MS24398 Bushing	AS5173 Bushing
AN900 Gasket	MS35769 Gasket per AS35769
AN924 & MS24400 Nut	AS5178 Nut
AN931 Grommet	MS35489 Grommet
AN935 Lockwasher	B332-__ Lockwasher, dash number per MS35338
AN936 Lockwasher	MS35335 Lockwasher
AN960-4L Washer	NAS1149FN416P Washer
AN960-4 Washer	NAS1149FN432P Washer
AN960-6L Washer	NAS1149FN616P Washer
AN960-6 Washer	NAS1149FN632P Washer
AN960-8L Washer	NAS1149FN816P Washer
AN960-8 Washer	NAS1149FN832P Washer

Continues

PART INTERCHANGEABILITY (Cont'd)

PART:	INTERCHANGEABLE WITH:
AN960-10L Washer	NAS1149F0332P Washer
AN960-10 Washer	NAS1149F0363P Washer
AN960-416L Washer	NAS1149F0432P Washer
AN960-416 Washer	NAS1149F0463P Washer
AN960-516L Washer	NAS1149F0532P Washer
AN960-516 Washer	NAS1149F0563P Washer
AN960-616L Washer	NAS1149F0632P Washer
AN960-616 Washer	NAS1149F0663P Washer
AN960-816L Washer	NAS1149F0832P Washer
AN960-816 Washer	NAS1149F0863P Washer
AN960-1016L Washer	NAS1149F1032P Washer
AN960-1016 Washer	NAS1149F1063P Washer
AN960PD8L Washer	NAS1149DN816J Washer
AN960PD416L Washer	NAS1149D0416J Washer
AN960PD516L Washer	NAS1149D0516J Washer
AN960PD616L Washer	NAS1149D0616J Washer
AVDEL 016__-___ Rivet	B204-__ Rivet
B0500-022-S Washer	A478-2 Washer
B1000-035-S Washer	A478-3 Washer
B1000-043-S Washer	A478-4 Washer
B270-6 Sealant	A701-11 Tape
CCR244SS-3-02 Rivet	B204-5 Rivet
MS26574-__ Circuit breaker	B297-__ Circuit breaker, except B297-25 and B297-120
MS3320-20 Circuit breaker	B297-120 Circuit breaker
LW-18959-150-25 Clamp	B444-1 Clamp
LW-18959-163-25 Clamp	B444-2 Clamp
LW-18959-175-25 Clamp	B444-3 Clamp
MS20604ML4W1 Rivet	MS20604M4W1 Rivet per NASM20604
MS21042L3 thru L6 Nut	D210-3 thru -6 Nut*
MS21209___ Insert	MS21209___L or NAS1130___ Insert
MS21919___ Clamp	AS21919___ Clamp
MS24665 CAD plated steel cotter pin	MS24665 CRES cotter pin per NASM24665
MS27039C080__ Screw	B526-6 or -8 Screw and B527-08 Washer per R66 MM § 6-71. Except where noted.
MS27151-__ Stamped Nut	B330-__ Stamped Nut
NAS1067 Nutplate	MS21086 Nutplate per NASM21086
NAS1068A__ Nutplate	MS21075L__E Nutplate per NASM21075
NAS1291-04 thru -08 Nut	MS21042 Nut per NASM21042
NAS1291-3 thru -10 Nut	D210-3 thru -10 Nut*
NAS1303 thru NAS1320 Bolt, except 1307 Bolt	NAS6603 thru NAS6620** Bolt, except 6607 Bolt
NAS1919B0__S0__ Rivet	NAS9301B-__-0__ Rivet
NAS1921B0__S0__ Rivet	NAS9302B-__-0__ Rivet
NAS428-__-__ Bolt	NAS428-__A__ Bolt
NAS487 Instrument nut	MS33737 Instrument nut per NASM33737
NAS6605-31 Bolt	B660-2 Bolt

* One-way interchangeability, only D210 nut shall be used for listed sizes.

** The following bolts must be NAS1300 series only: NAS1304-17, NAS1304-35, and NAS1305-35.

Continues

PART INTERCHANGEABILITY (Cont'd)

PART:	INTERCHANGEABLE WITH:
NAS679A__ Nut	NAS1291-__ Nut
NAS679C__ M Nut	NAS1291C__ M Nut
NAS696 Nutplate	MS21071 Nutplate per NASM21071
NAS697 Nutplate	MS21069 & MS21070 Nutplate per NASM21069 & NASM21070
NAS698 Nutplate	MS21073 Nutplate per NASM21073

A880 FLARED TUBE COMPONENTS

A. Nuts – Flare

Dash Numbers	Allowable Part Numbers	Material REF	Tube OD REF
-102	AN818-2D, AN818-2W, AS5175W02	AL	1/8-inch
-103	AN818-3D, AN818-3W, AS5175W03	AL	3/16-inch
-104	AN818-4D, AN818-4W, AS5175W04	AL	1/4-inch
-105	AN818-5D, AN818-5W, AS5175W05	AL	5/16-inch
-106	AN818-6D, AN818-6W, AS5175W06	AL	3/8-inch
-108	AN818-8D, AN818-8W, AS5175W08	AL	1/2-inch
-110	AN818-10D, AN818-10W, AS5175W10	AL	5/8-inch
-202	AN818-2J, AS5175J02	CRES	1/8-inch
-203	AN818-3J, AS5175J03	CRES	3/16-inch
-204	AN818-4J, AS5175J04	CRES	1/4-inch
-205	AN818-5J, AS5175J05	CRES	5/16-inch
-206	AN818-6J, AS5175J06	CRES	3/8-inch
-208	AN818-8J, AS5175J08	CRES	1/2-inch
-210	AN818-10J, AS5175J10	CRES	5/8-inch

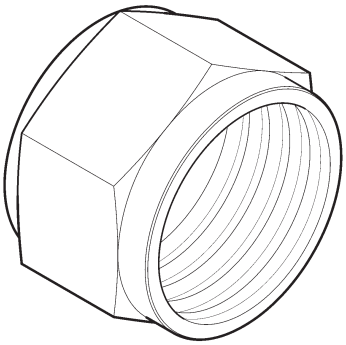

Continues

A880 FLARED TUBE COMPONENTS (Cont'd)

B. Sleeves

Dash Numbers	Allowable Part Numbers	Material REF	Tube OD REF
-302	MS20819-2D, AS3220D02, AS3220W02	AL	1/8-inch
-303	MS20819-3D, AS3220D03, AS3220W03	AL	3/16-inch
-304	MS20819-4D, AS3220D04, AS3220W04	AL	1/4-inch
-305	MS20819-5D, AS3220D05, AS3220W05	AL	5/16-inch
-306	MS20819-6D, AS3220D06, AS3220W06	AL	3/8-inch
-308	MS20819-8D, AS3220D08, AS3220W08	AL	1/2-inch
-310	MS20819-10D, AS3220D10, AS3220W10	AL	5/8-inch
-402	MS20819-2J, AS5176J02	CRES	1/8-inch
-403	MS20819-3J, AS5176J03	CRES	3/16-inch
-404	MS20819-4J, AS5176J04	CRES	1/4-inch
-405	MS20819-5J, AS5176J05	CRES	5/16-inch
-406	MS20819-6J, AS5176J06	CRES	3/8-inch
-408	MS20819-8J, AS5176J08	CRES	1/2-inch
-410	MS20819-10J, AS5176J10	CRES	5/8-inch

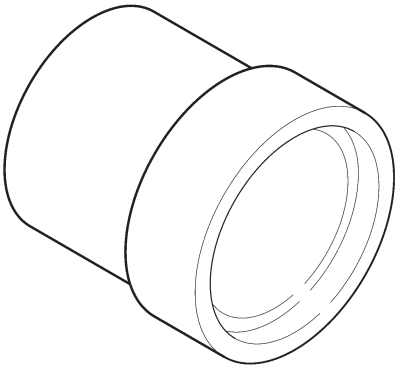

Continues

A880 FLARED TUBE COMPONENTS (Cont'd)

C. Adapters – NPT to Flare

Dash Numbers	Allowable Part Numbers	Material REF	Tube OD REF
-502	AN816-2D, AS5194D0202	AL	1/8-inch
-503	AN816-3D, AS5194D0302	AL	3/16-inch
-504	AN816-4D, AS5194D0402	AL	1/4-inch
-505	AN816-5D, AS5194D0502	AL	5/16-inch
-506	AN816-6D, AS5194D0604	AL	3/8-inch
-508	AN816-8D, AS5194D0806	AL	1/2-inch
-510	AN816-10D, AS5194D1008	AL	5/8-inch
-532	AN816-2J, AS5194J0202	CRES	1/8-inch
-533	AN816-3J, AS5194J0302	CRES	3/16-inch
-534	AN816-4J, AS5194J0402	CRES	1/4-inch
-535	AN816-5J, AS5194J0502	CRES	5/16-inch
-536	AN816-6J, AS5194J0604	CRES	3/8-inch
-538	AN816-8J, AS5194J0806	CRES	1/2-inch
-540	AN816-10J, AS5194J1008	CRES	5/8-inch
-562	AN816-2, AS5194-0202	STL	1/8-inch
-563	AN816-3, AS5194-0302	STL	3/16-inch
-564	AN816-4, AS5194-0402	STL	1/4-inch
-565	AN816-5, AS5194-0502	STL	5/16-inch
-566	AN816-6, AS5194-0604	STL	3/8-inch
-568	AN816-8, AS5194-0806	STL	1/2-inch
-570	AN816-10, AS5194-1008	STL	5/8-inch

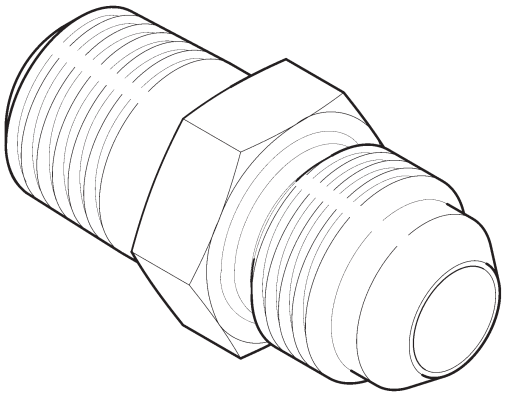

Continues

A880 FLARED TUBE COMPONENTS (Cont'd)

D. Elbows – 90°, NPT to Flare

Dash Numbers	Allowable Part Numbers	Material REF	Tube OD REF
-602	AN822-2D, MS20822-2D, AS5195W0202	AL	1/8-inch
-603	AN822-3D, MS20822-3D, AS5195W0302	AL	3/16-inch
-604	AN822-4D, MS20822-4D, AS5195W0402	AL	1/4-inch
-605	AN822-5D, MS20822-5D, AS5195W0502	AL	5/16-inch
-606	AN822-6D, MS20822-6D, AS5195W0604	AL	3/8-inch
-608	AN822-8D, MS20822-8D, AS5195W0806	AL	1/2-inch
-610	AN822-10D, MS20822-10D, AS5195W1008	AL	5/8-inch
-632	AN822-2J, MS20822-2J, AS5195J0202	CRES	1/8-inch
-633	AN822-3J, MS20822-3J, AS5195J0302	CRES	3/16-inch
-634	AN822-4J, MS20822-4J, AS5195J0402	CRES	1/4-inch
-635	AN822-5J, MS20822-5J, AS5195J0502	CRES	5/16-inch
-636	AN822-6J, MS20822-6J, AS5195J0604	CRES	3/8-inch
-638	AN822-8J, MS20822-8J, AS5195J0806	CRES	1/2-inch
-640	AN822-10J, MS20822-10J, AS5195J1008	CRES	5/8-inch
-662	AN822-2, MS20822-2, AS5195-0202	STL	1/8-inch
-663	AN822-3, MS20822-3, AS5195-0302	STL	3/16-inch
-664	AN822-4, MS20822-4, AS5195-0402	STL	1/4-inch
-665	AN822-5, MS20822-5, AS5195-0502	STL	5/16-inch
-666	AN822-6, MS20822-6, AS5195-0604	STL	3/8-inch
-668	AN822-8, MS20822-8, AS5195-0806	STL	1/2-inch
-670	AN822-10, MS20822-10, AS5195-1008	STL	5/8-inch

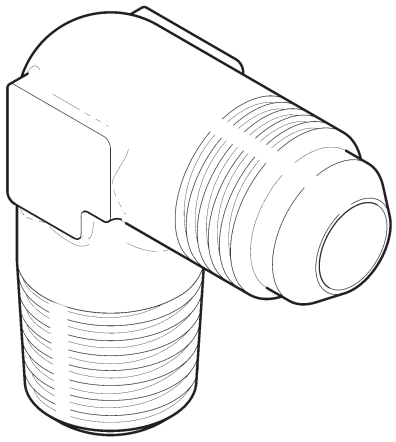

Continues

A880 FLARED TUBE COMPONENTS (Cont'd)

E. Elbows – 45°, NPT to Flare

Dash Numbers	Allowable Part Numbers	Material REF	Tube OD REF
-702	AN823-2D, MS20823-2D, AS5196W0202	AL	1/8-inch
-703	AN823-3D, MS20823-3D, AS5196W0302	AL	3/16-inch
-704	AN823-4D, MS20823-4D, AS5196W0402	AL	1/4-inch
-705	AN823-5D, MS20823-5D, AS5196W0502	AL	5/16-inch
-706	AN823-6D, MS20823-6D, AS5196W0604	AL	3/8-inch
-708	AN823-8D, MS20823-8D, AS5196W0806	AL	1/2-inch
-710	AN823-10D, MS20823-10D, AS5196W1008	AL	5/8-inch
-732	AN823-2J, MS20823-2J, AS5196J0202	CRES	1/8-inch
-733	AN823-3J, MS20823-3J, AS5196J0302	CRES	3/16-inch
-734	AN823-4J, MS20823-4J, AS5196J0402	CRES	1/4-inch
-735	AN823-5J, MS20823-5J, AS5196J0502	CRES	5/16-inch
-736	AN823-6J, MS20823-6J, AS5196J0604	CRES	3/8-inch
-738	AN823-8J, MS20823-8J, AS5196J0806	CRES	1/2-inch
-740	AN823-10J, MS20823-10J, AS5196J1008	CRES	5/8-inch
-762	AN823-2, MS20823-2, AS5196-0202	STL	1/8-inch
-763	AN823-3, MS20823-3, AS5196-0302	STL	3/16-inch
-764	AN823-4, MS20823-4, AS5196-0402	STL	1/4-inch
-765	AN823-5, MS20823-5, AS5196-0502	STL	5/16-inch
-766	AN823-6, MS20823-6, AS5196-0604	STL	3/8-inch
-768	AN823-8, MS20823-8, AS5196-0806	STL	1/2-inch
-770	AN823-10, MS20823-10, AS5196-1008	STL	5/8-inch

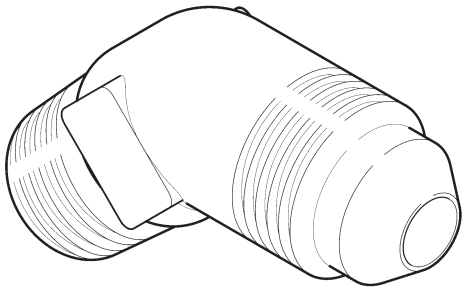

Continues

A880 FLARED TUBE COMPONENTS (Cont'd)

F. Elbows – 90°, Bulkhead Flare to Flare

Dash Numbers	Allowable Part Numbers	Material REF	Tube OD REF
-802	AN833-2D, AS1038D0202, AS1038W0202	AL	1/8-inch
-803	AN833-3D, AS1038D0303, AS1038W0303	AL	3/16-inch
-804	AN833-4D, AS1038D0404, AS1038W0404	AL	1/4-inch
-805	AN833-5D, AS1038D0505, AS1038W0505	AL	5/16-inch
-806	AN833-6D, AS1038D0606, AS1038W0606	AL	3/8-inch
-808	AN833-8D, AS1038D0808, AS1038W0808	AL	1/2-inch
-810	AN833-10D, AS1038D1010, AS1038W1010	AL	5/8-inch
-832	AN833-2J, AS1038J0202	CRES	1/8-inch
-833	AN833-3J, AS1038J0303	CRES	3/16-inch
-834	AN833-4J, AS1038J0404	CRES	1/4-inch
-835	AN833-5J, AS1038J0505	CRES	5/16-inch
-836	AN833-6J, AS1038J0606	CRES	3/8-inch
-838	AN833-8J, AS1038J0808	CRES	1/2-inch
-840	AN833-10J, AS1038J1010	CRES	5/8-inch
-862	AN833-2, AS1038-0202	STL	1/8-inch
-863	AN833-3, AS1038-0303	STL	3/16-inch
-864	AN833-4, AS1038-0404	STL	1/4-inch
-865	AN833-5, AS1038-0505	STL	5/16-inch
-866	AN833-6, AS1038-0606	STL	3/8-inch
-868	AN833-8, AS1038-0808	STL	1/2-inch
-870	AN833-10, AS1038-1010	STL	5/8-inch

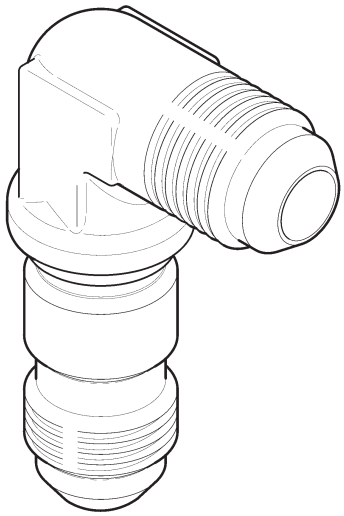

Continues

A880 FLARED TUBE COMPONENTS (Cont'd)

G. Unions – Flare to Flare

Dash Numbers	Allowable Part Numbers	Material REF	Tube OD REF
-902	AN815-2D, AS5174D0202, AS5174W0202	AL	1/8-inch
-903	AN815-3D, AS5174D0303, AS5174W0303	AL	3/16-inch
-904	AN815-4D, AS5174D0404, AS5174W0404	AL	1/4-inch
-905	AN815-5D, AS5174D0505, AS5174W0505	AL	5/16-inch
-906	AN815-6D, AS5174D0606, AS5174W0606	AL	3/8-inch
-908	AN815-8D, AS5174D0808, AS5174W0808	AL	1/2-inch
-910	AN815-10D, AS5174D1010, AS5174W1010	AL	5/8-inch
-932	AN815-2J, AS5174J0202	CRES	1/8-inch
-933	AN815-3J, AS5174J0303	CRES	3/16-inch
-934	AN815-4J, AS5174J0404	CRES	1/4-inch
-935	AN815-5J, AS5174J0505	CRES	5/16-inch
-936	AN815-6J, AS5174J0606	CRES	3/8-inch
-938	AN815-8J, AS5174J0808	CRES	1/2-inch
-940	AN815-10J, AS5174J1010	CRES	5/8-inch
-962	AN815-2, AS5174-0202	STL	1/8-inch
-963	AN815-3, AS5174-0303	STL	3/16-inch
-964	AN815-4, AS5174-0404	STL	1/4-inch
-965	AN815-5, AS5174-0505	STL	5/16-inch
-966	AN815-6, AS5174-0606	STL	3/8-inch
-968	AN815-8, AS5174-0808	STL	1/2-inch
-970	AN815-10, AS5174-1010	STL	5/8-inch

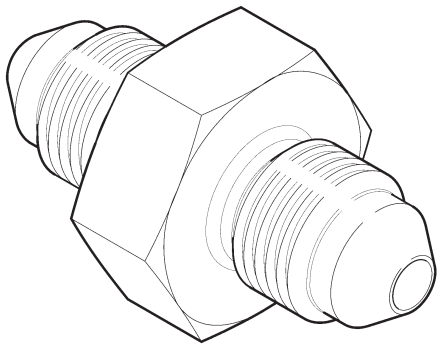

Continues

A880 FLARED TUBE COMPONENTS (Cont'd)

H. Nuts – Hex

Dash Numbers	Allowable Part Numbers	Material REF	Tube OD REF
-1002	AN924-2D, AN924-2W, AS5178W02	AL	1/8-inch
-1003	AN924-3D, AN924-3W, AS5178W03	AL	3/16-inch
-1004	AN924-4D, AN924-4W, AS5178W04	AL	1/4-inch
-1005	AN924-5D, AN924-5W, AS5178W05	AL	5/16-inch
-1006	AN924-6D, AN924-6W, AS5178W06	AL	3/8-inch
-1008	AN924-8D, AN924-8W, AS5178W08	AL	1/2-inch
-1010	AN924-10D, AN924-10W, AS5178W10	AL	5/8-inch
-1032	AN924-2J, AS5178J02	CRES	1/8-inch
-1033	AN924-3J, AS5178J03	CRES	3/16-inch
-1034	AN924-4J, AS5178J04	CRES	1/4-inch
-1035	AN924-5J, AS5178J05	CRES	5/16-inch
-1036	AN924-6J, AS5178J06	CRES	3/8-inch
-1038	AN924-8J, AS5178J08	CRES	1/2-inch
-1040	AN924-10J, AS5178J10	CRES	5/8-inch
-1062	AN924-2, AS5178-02	STL	1/8-inch
-1063	AN924-3, AS5178-03	STL	3/16-inch
-1064	AN924-4, AS5178-04	STL	1/4-inch
-1065	AN924-5, AS5178-05	STL	5/16-inch
-1066	AN924-6, AS5178-06	STL	3/8-inch
-1068	AN924-8, AS5178-08	STL	1/2-inch
-1070	AN924-10, AS5178-10	STL	5/8-inch

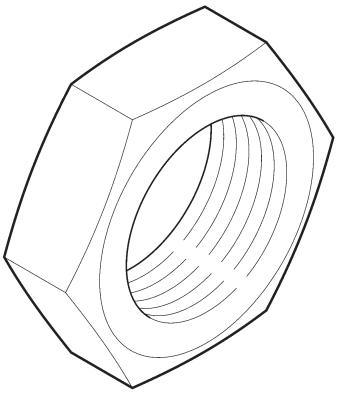

Continues

A880 FLARED TUBE COMPONENTS (Cont'd)

I. Tees – NPT to Flare

Dash Numbers	Allowable Part Numbers	Material REF	Tube OD REF
-1102	AN826-2D, MS20826-2D, AS5198W020202	AL	1/8-inch
-1103	AN826-3D, MS20826-3D, AS5198W030203	AL	3/16-inch
-1104	AN826-4D, MS20826-4D, AS5198W040204	AL	1/4-inch
-1105	AN826-5D, MS20826-5D, AS5198W050205	AL	5/16-inch
-1106	AN826-6D, MS20826-6D, AS5198W060406	AL	3/8-inch
-1108	AN826-8D, MS20826-8D, AS5198W080608	AL	1/2-inch
-1110	AN826-10D, MS20826-10D, AS5198W100810	AL	5/8-inch
-1132	AN826-2J, MS20826-2J, AS5198J020202	CRES	1/8-inch
-1133	AN826-3J, MS20826-3J, AS5198J030203	CRES	3/16-inch
-1134	AN826-4J, MS20826-4J, AS5198J040204	CRES	1/4-inch
-1135	AN826-5J, MS20826-5J, AS5198J050205	CRES	5/16-inch
-1136	AN826-6J, MS20826-6J, AS5198J060406	CRES	3/8-inch
-1138	AN826-8J, MS20826-8J, AS5198J080608	CRES	1/2-inch
-1140	AN826-10J, MS20826-10J, AS5198J100810	CRES	5/8-inch
-1162	AN826-2, MS20826-2, AS5198-020202	STL	1/8-inch
-1163	AN826-3, MS20826-3, AS5198-030203	STL	3/16-inch
-1164	AN826-4, MS20826-4, AS5198-040204	STL	1/4-inch
-1165	AN826-5, MS20826-5, AS5198-050205	STL	5/16-inch
-1166	AN826-6, MS20826-6, AS5198-060406	STL	3/8-inch
-1168	AN826-8, MS20826-8, AS5198-080608	STL	1/2-inch
-1170	AN826-10, MS20826-10, AS5198-100810	STL	5/8-inch

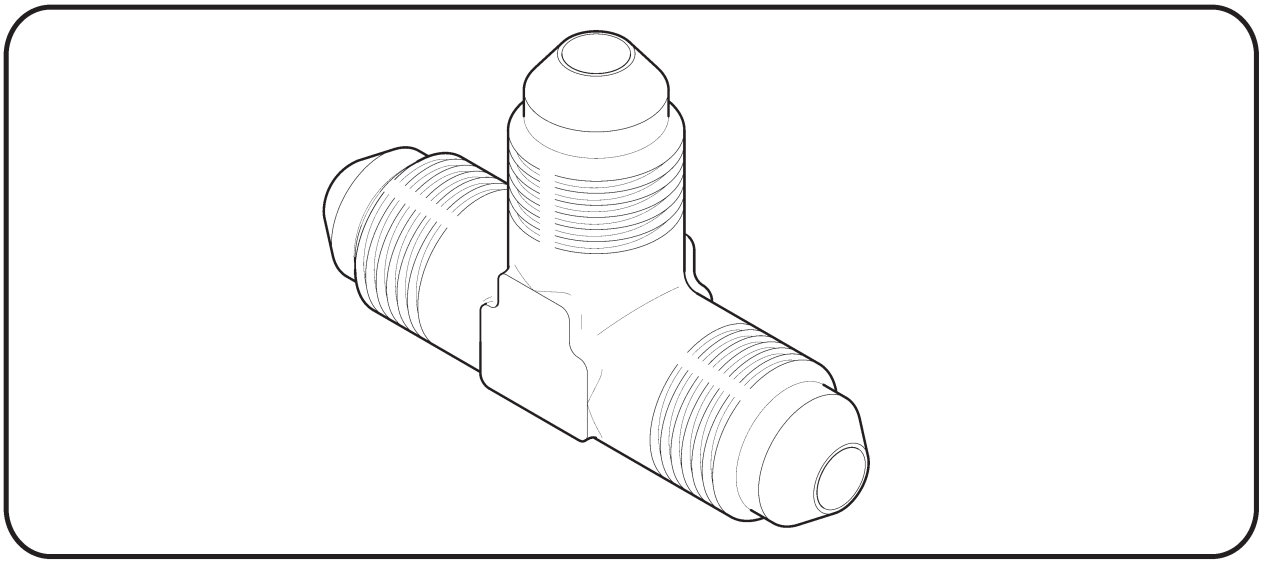

Continues

A880 FLARED TUBE COMPONENTS (Cont'd)

J. Plugs without Holes

Dash Numbers	Allowable Part Numbers	Material REF	Tube OD REF
-1202	AN814-2D, AN814-2W, AS5169D02, AS5169W02	AL	1/8-inch
-1203	AN814-3D, AN814-3W, AS5169D03, AS5169W03	AL	3/16-inch
-1204	AN814-4D, AN814-4W, AS5169D04, AS5169W04	AL	1/4-inch
-1205	AN814-5D, AN814-5W, AS5169D05, AS5169W05	AL	5/16-inch
-1206	AN814-6D, AN814-6W, AS5169D06, AS5169W06	AL	3/8-inch
-1208	AN814-8D, AN814-8W, AS5169D08, AS5169W08	AL	1/2-inch
-1210	AN814-10D, AN814-10W, AS5169D10, AS5169W10	AL	5/8-inch
-1232	AN814-2J, AS5169J02	CRES	1/8-inch
-1233	AN814-3J, AS5169J03	CRES	3/16-inch
-1234	AN814-4J, AS5169J04	CRES	1/4-inch
-1235	AN814-5J, AS5169J05	CRES	5/16-inch
-1236	AN814-6J, AS5169J06	CRES	3/8-inch
-1238	AN814-8J, AS5169J08	CRES	1/2-inch
-1240	AN814-10J, AS5169J10	CRES	5/8-inch
-1262	AN814-2, AS5169-02	STL	1/8-inch
-1263	AN814-3, AS5169-03	STL	3/16-inch
-1264	AN814-4, AS5169-04	STL	1/4-inch
-1265	AN814-5, AS5169-05	STL	5/16-inch
-1266	AN814-6, AS5169-06	STL	3/8-inch
-1268	AN814-8, AS5169-08	STL	1/2-inch
-1270	AN814-10, AS5169-10	STL	5/8-inch

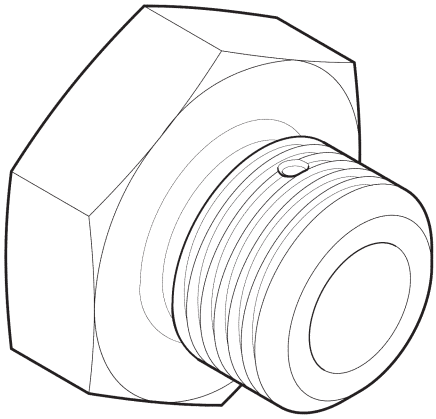

Continues

A880 FLARED TUBE COMPONENTS (Cont'd)

K. Plugs with Holes

Dash Numbers	Allowable Part Numbers	Material REF	Tube OD REF
-1302	AN814-2DL, AN814-2WL, AS5169D02L, AS5169W02L	AL	1/8-inch
-1303	AN814-3DL, AN814-3WL, AS5169D03L, AS5169W03L	AL	3/16-inch
-1304	AN814-4DL, AN814-4 WL, AS5169D04L, AS5169W04L	AL	1/4-inch
-1305	AN814-5DL, AN814-5WL, AS5169D05L, AS5169W05L	AL	5/16-inch
-1306	AN814-6DL, AN814-6WL, AS5169D06L, AS5169W06L	AL	3/8-inch
-1308	AN814-8DL, AN814-8WL, AS5169D08L, AS5169W08L	AL	1/2-inch
-1310	AN814-10DL, AN814-10WL, AS5169D10L, AS5169W10L	AL	5/8-inch
-1332	AN814-2JL, AS5169J02L	CRES	1/8-inch
-1333	AN814-3JL, AS5169J03L	CRES	3/16-inch
-1334	AN814-4JL, AS5169J04L	CRES	1/4-inch
-1335	AN814-5JL, AS5169J0SL	CRES	5/16-inch
-1336	AN814-6JL, AS5169J06L	CRES	3/8-inch
-1338	AN814-8JL, AS5169J0BL	CRES	1/2-inch
-1340	AN814-10JL, AS5169J10L	CRES	5/8-inch
-1362	AN814-2L, AS5169-02L	STL	1/8-inch
-1363	AN814-3L, AS5169-03L	STL	3/16-inch
-1364	AN814-4L, AS5169-04L	STL	1/4-inch
-1365	AN814-5L, AS5169-05L	STL	5/16-inch
-1366	AN814-6L, AS5169-06L	STL	3/8-inch
-1368	AN814-8L, AS5169-08L	STL	1/2-inch
-1370	AN814-10L, AS5169-10L	STL	5/8-inch

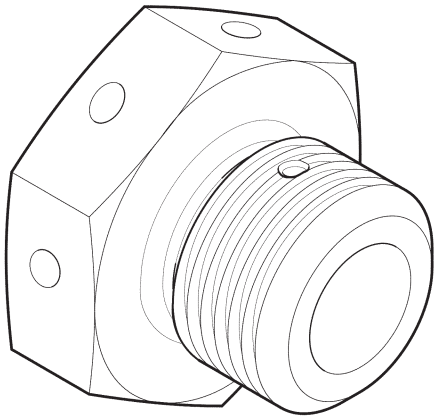

CHAPTER 6

DIMENSIONS AND DESCRIPTIONS

Figure	*Title*	*Page*
6-1	Access Panels – Forward Cabin	6.0
6-3	Access Panels – Aft Cabin	6.2
6-5	Access Panels – Aft Fuselage (LH)	6.4
6-7	Access Panels – Aft Fuselage (RH)	6.6
6-9	Access Panels – Chin	6.8
6-11	Access Panels – Belly	6.10
6-13	Access Panels – Belly (Float Ship)	6.12
6-15	ADF/Marker Beacon Antennas	6.14
6-17	UHF and DME Antennas	6.16
6-19	Transponder Antenna Installation	6.18
6-21	Aft Belly Antennas	6.20
6-23	Aft Belly Antennas	6.22
6-25	Kannad ELT Antenna Installation	6.24
6-27	GPS Antenna Installation (Cowl Mount)	6.26
6-29	Tailcone Antenna Connectors	6.28
6-31	Forward Upper Tailcone Antennas	6.30
6-33	Aft Upper Tailcone Antennas	6.32
6-35	Lower Tailcone Antennas	6.34
6-37	NAV Antenna Installation	6.36
6-39	NAV Antenna Combiner / Diplexer Installation	6.38
6-41	Radar Altimeter Antenna Installation (FreeFlight RA4000/4500)	6.40
6-41B	Radar Altimeter Antenna Installation (Garmin GRA 55)	6.41A
6-43	Glideslope Antenna Installation	6.42

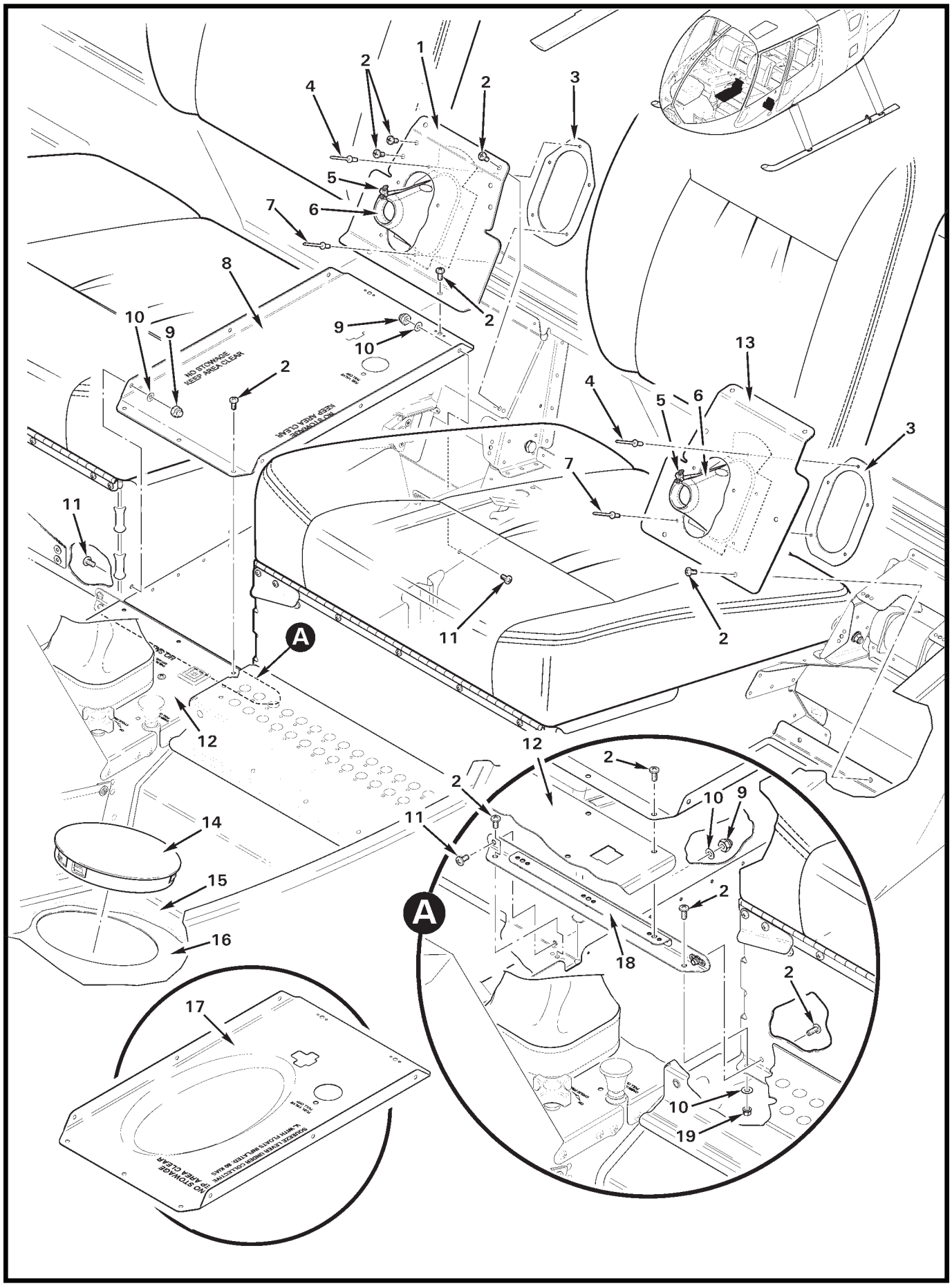
1
2
3
4
5
6
7
8
9
10
11
12
13
14
15
16
17
18
19
A
NO STOWAGE
KEEP AREA CLEAR

FIGURE AND INDEX NUMBER	PART NUMBER	DESCRIPTION	PARTS AVAIL	QTY PER ASSY
		ACCESS PANELS – FORWARD CABIN		
6-1-1	F680-3	Cover Assembly (Incl items 3, 4, 6, and 7)	X	1
2	MS27039C0806	Screw	X	20
3	F680-5	Ring	X	1
4	B204-2	Rivet (upper)	X	1
5	MS3367-5-0	Ty-Rap	X	1
6	A678-3	Boot Assembly (Incl item 5)	X	1
7	B204-1	Rivet (lower)	X	4
8	F445-1	Cover Assembly	X	1
9	B340-4	Nut	X	7
10	NAS1149FN816P	Washer	X	8
11	MS27039C0805	Screw	X	7
12	F444	Cover – Cyclic Control Assembly (Ref)		
13	F680-1	Cover Assembly (Incl items 3, 4, 6, and 7)	X	1
14	2451	Plug	X	2
15	F469	Carpet Assembly (Ref)		
16	F232	Floor – Cabin (Ref)		
17	F445-3	Cover Assembly (float-equipped R66s)	X	1
18	F443-3	Angle Assembly	X	1
19	MS21042L08	Nut	X	1

NOTES

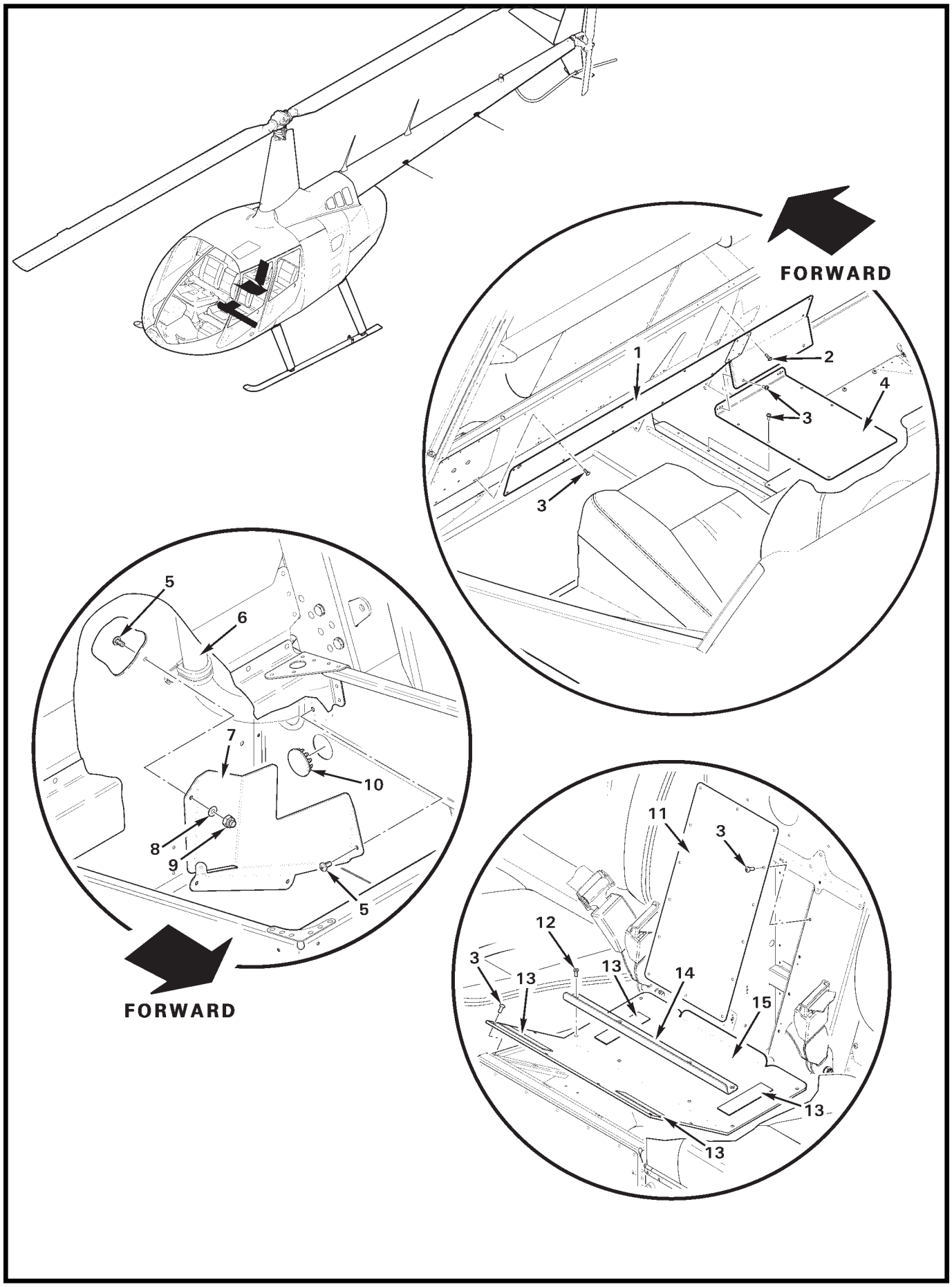
FORWARD
1
2
3
4
3
5
6
7
10
8
9
5
FORWARD
11
3
12
3
13
13
14
15
13
13

FIGURE AND INDEX NUMBER	PART NUMBER	DESCRIPTION	PARTS AVAIL	QTY PER ASSY
		ACCESS PANELS – AFT CABIN		
6-3-1	F461-1	Cover Assembly	X	1
2	MS27039C0807	Screw	X	4
3	MS27039C0806	Screw	X	31
4	F463-1	Cover Assembly	X	1
5	MS27039C0805	Screw	X	4
6	F859-03	Harness Assembly (cabin; Ref)		
7	F467-1	Cover	X	1
	F467-3	Cover (pop-out floats; not shown)	X	1
8	NAS1149FN816P	Washer	X	3
9	B340-4	Nut	X	3
10	B209-8	Plug (flight controls access)	X	1
11	F474-2	Cover	X	1
12	MS24694-S4	Screw	X	4
13	B175-12	Loop Tape	X	A/R
14	F380-8	Angle	X	1
15	F474-1	Cover Assembly (see Figure 25-1 for seat details)	X	1

NOTES

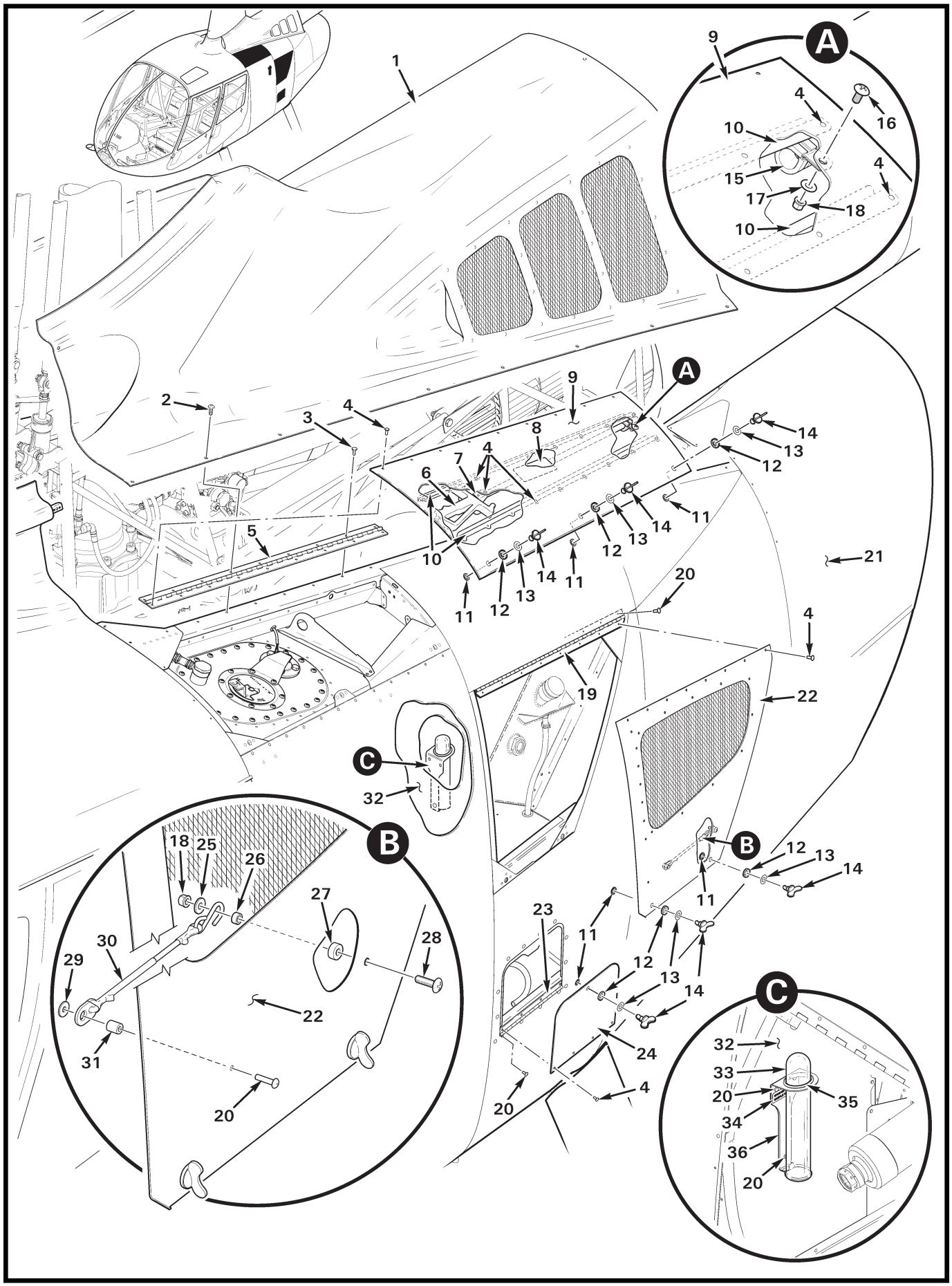
A
B
C
1
2
3
4
5
6
7
8
9
10
11
12
13
14
15
16
17
18
19
20
21
22
23
24
25
26
27
28
29
30
31
32
33
34
35
36

FIGURE AND INDEX NUMBER	PART NUMBER	DESCRIPTION	PARTS AVAIL	QTY PER ASSY
		ACCESS PANELS – AFT FUSELAGE (LH)		
6-5-1	F706-1	Cowling	X	1
2	B526-6	Screw	X	24
3	MS20426AD3	Rivet	X	7
4	MS20470AD3	Rivet	X	35
5	G925-1	Hinge	X	1
6	MT106-2	Fuel Dipstick	X	1
7	G926-9	Bracket	X	1
8	G682-20	Decal – "STOW MT106-2 FUEL DIPSTICK"	X	1
9	G004-2	Door	X	1
10	G926-5	Stiffener	X	2
11	85-34-201-20	Retaining Ring	X	6
12	85-46-101-39	Washer	X	6
13	NAS1149C0516R	Washer ([shim] increases stud axial preload on receptacle)	X	A/R
14	85-12-140-16	Stud (or 85-12-160-16 as required)	X	6
15	MS21919WDG8	Clamp	X	1
16	AN526C832R6	Screw	X	1
17	NAS1149CN816P	Washer	X	1
18	MS21042L08	Nut	X	2
19	G925-4	Hinge (install using item 20)	X	1
20	MS20470AD4	Rivet	X	17
21	G040-1	Cowling Assembly (Ref)		
	G040-7	Cowling Assembly (Ref; with A/C installed)		
22	G004-10	Door (install using item 4)	X	1
23	G925-1	Hinge (install using item 20)	X	1
24	G927-1	Door (install using item 4)	X	1
25	NAS1149FN832P	Washer	X	1
26	A130-13	Spacer	X	1
27	A130-37	Spacer	X	1
28	AN526-C832R10	Screw (do not substitute with MS27039 screws)	X	1
29	NAS1149FN632P	Washer	X	1
30	D918-5	Elastic Cord Assembly	X	1
31	A130-55	Spacer	X	1
32	—	Aft Bulkhead – Fuel Bladder Support Assembly (Ref)		
33	MT106-3	Tube (sample)	X	1
34	G682-21	Decal – "STOW FUEL SAMPLE TUBE HERE"	X	1

NOTES

Continues

FIGURE AND INDEX NUMBER	PART NUMBER	DESCRIPTION	PARTS AVAIL	QTY PER ASSY
		ACCESS PANELS – AFT FUSELAGE (LH; Cont'd)		
6-5-35	NAS557-16A	Grommet	X	1
36	MT106-1	Holder Assembly (includes items 34 and 35; install using item 20 [3])	X	1
		* * *		
37	KI-230*	Fuel Sample Tube Installation Kit	X	A/R
38	KI-231*	MT106-2 Fuel Dipstick and Holder Installation Kit (Incl items 4, 6 thru 8, and 15 thru 18)	X	A/R

NOTES * See www.robinsonheli.com for kit contents and instructions.

Intentionally Blank

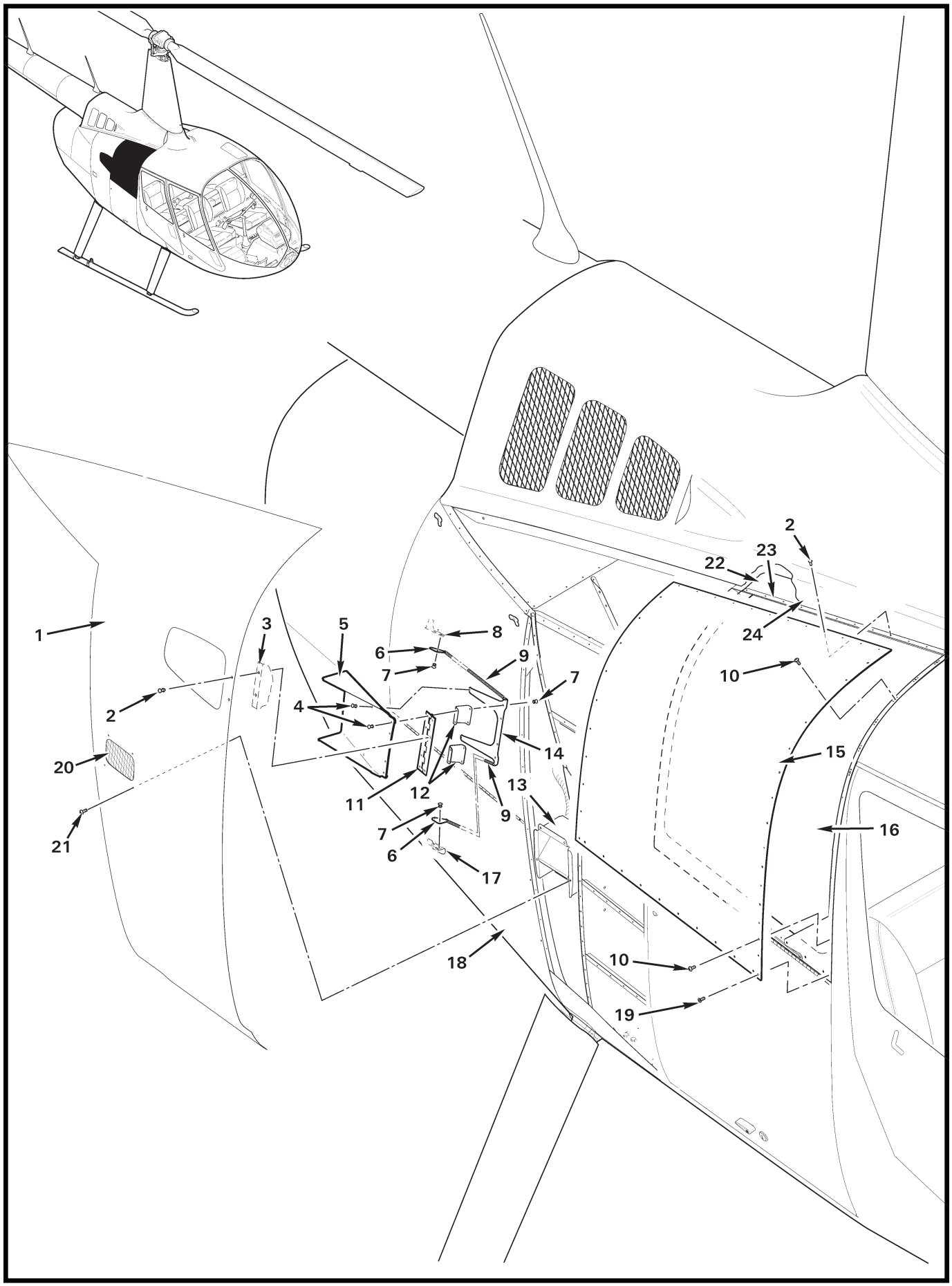
1
2
3
4
5
6
7
8
9
10
11
12
13
14
15
16
17
18
19
20
21
22
23
24

FIGURE AND INDEX NUMBER	PART NUMBER	DESCRIPTION	PARTS AVAIL	QTY PER ASSY
		ACCESS PANELS – AFT FUSELAGE (RH)		
6-7-1	G004-8	Skin (Ref)		
2	MS20470AD4	Rivet	X	14
3	G236-1	Bulkhead (Ref)		
4	MS20426AD3	Rivet	X	6
5	G910-1	Scoop Assembly (Incl G910-2 and items 11, 12, 14)	X	1
	G910-2	Scoop	X	1
6	G926-6	Tab	X	2
7	MS20470AD3	Rivet	X	6
8	G926-1	Channel (Ref)		
9	B774-9	Spring	X	2
10	MS27039C0806	Screw	X	24
11	G925-6	Hinge	X	1
12	G910-3	Tab	X	2
13	G918-1	Box Assembly (Ref; see Figure 75-1)		
14	G910-4	Panel	X	1
15	G004-4	Skin	X	1
16	G028-1	Fuel Bladder Assembly (Ref)		
17	G912-4	Stiffener (Ref)		
18	G040	Cowling Assembly (Ref)		
19	MS24694-S4	Screw (bonded to item 1 with B270-1 sealant)	X	12
20	G918-5	Screen (Ref; see Figure 75-1)		
21	MS27039C0807	Screw	X	4
22	G928-1	Skin (Ref)		
23	G928-2	Spacer	X	1
24	F706-1	Cowling (Ref)		

NOTES

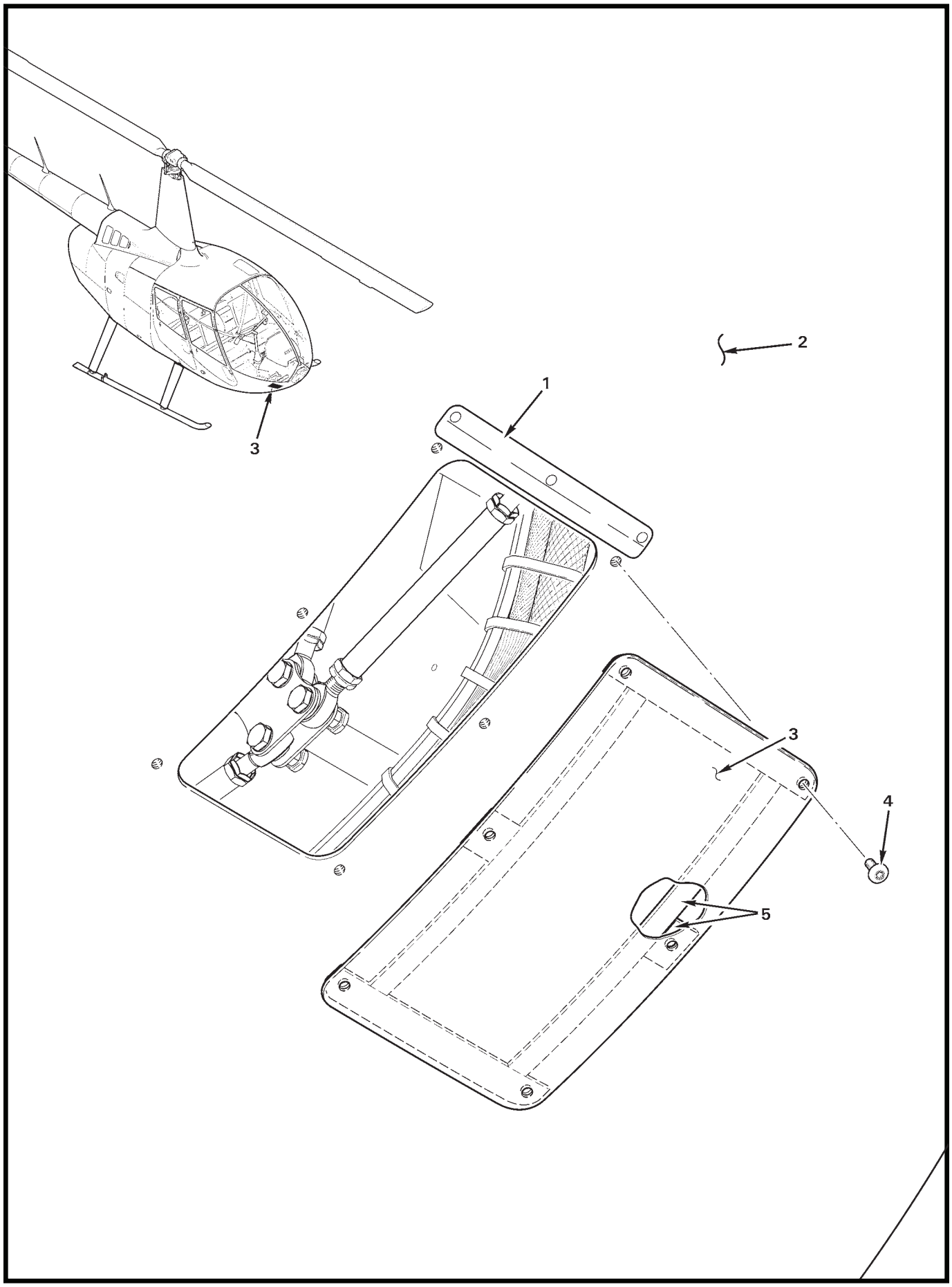
1
2
3
3
4
5

FIGURE AND INDEX NUMBER	PART NUMBER	DESCRIPTION	PARTS AVAIL	QTY PER ASSY
		ACCESS PANELS – CHIN		
6-9-1	C795-2	Shingle (Ref)		
2	F272-1	Chin (Ref)		
3	C795-1	Cover (inspection)	X	1
4	B526-6	Screw (or MS27039C0806)	X	6
5	A226-16	Seal (pop-out floats)	X	A/R

NOTES

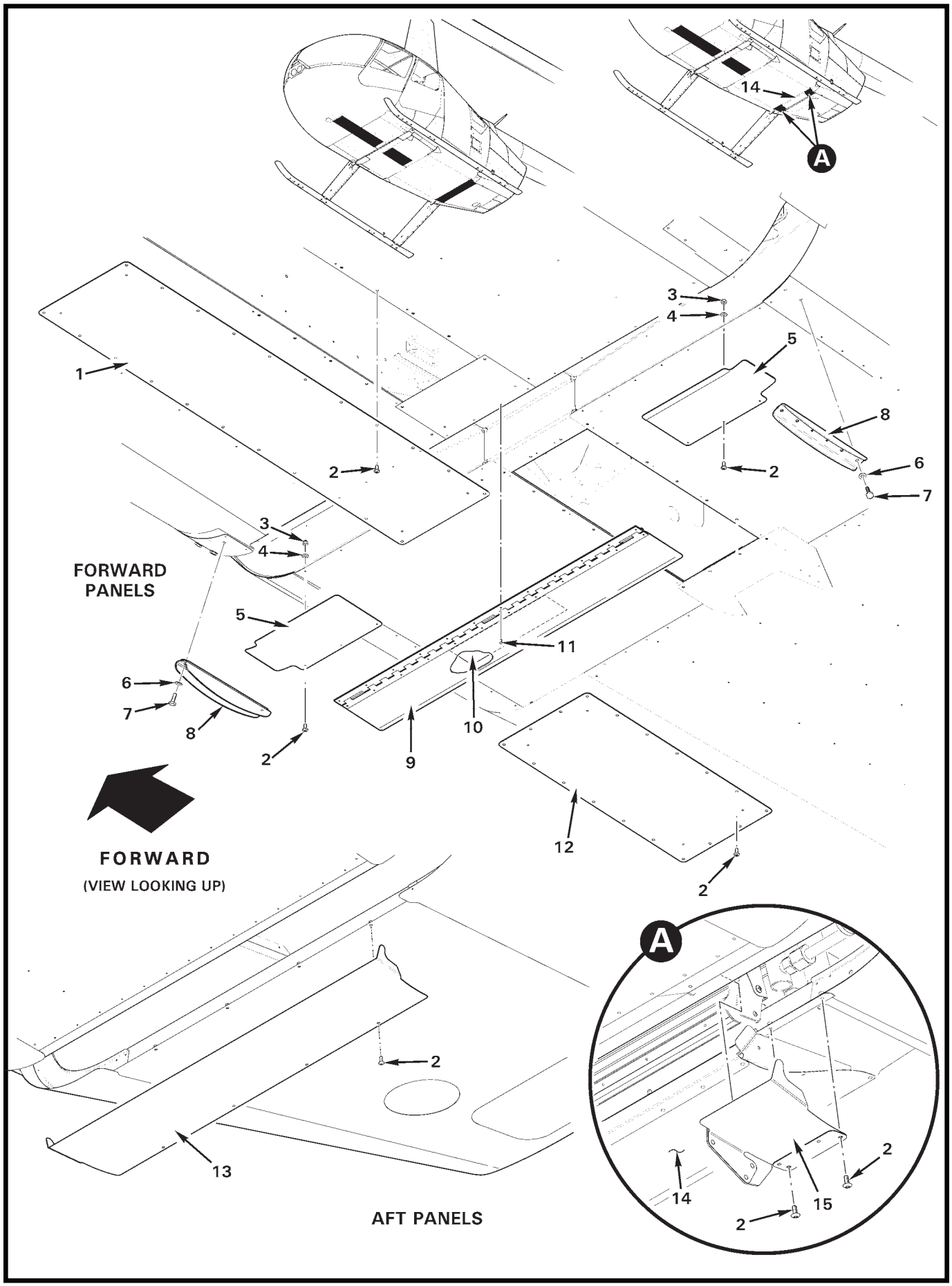
14
A
3
4
5
1
8
2
2
6
7
3
4
FORWARD
PANELS
5
11
6
7
8
10
2
9
12
FORWARD
(VIEW LOOKING UP)
2
A
2
13
14
15
2
2
AFT PANELS

FIGURE AND INDEX NUMBER	PART NUMBER	DESCRIPTION	PARTS AVAIL	QTY PER ASSY
		ACCESS PANELS – BELLY		
6-11-1	F794-1	Panel	X	1
2	B526-6	Screw	X	64
3	B340-4	Nut	X	6
4	NAS1149FN816P	Washer	X	6
5	F475-6	Cover	X	2
6	NAS1149F0332P	Washer	X	8
7	NAS6603-4	Bolt	X	8
8	F388-3	Channel Assembly	X	2
9	F475-1	Cover Assembly (Incl item 10)	X	1
10	A701-5	Tape (eight-inch length)	X	1
11	MS20470AD3	Rivet	X	12
12	F794-2	Panel	X	1
13	G308-2	Cover	X	1
14	G311-10*	Scoop (Ref)		
15	G311-3*	Cover Assembly (LH)	X	1
	G311-4*	Cover Assembly (RH)	X	1

NOTES * For air-conditioned ships.

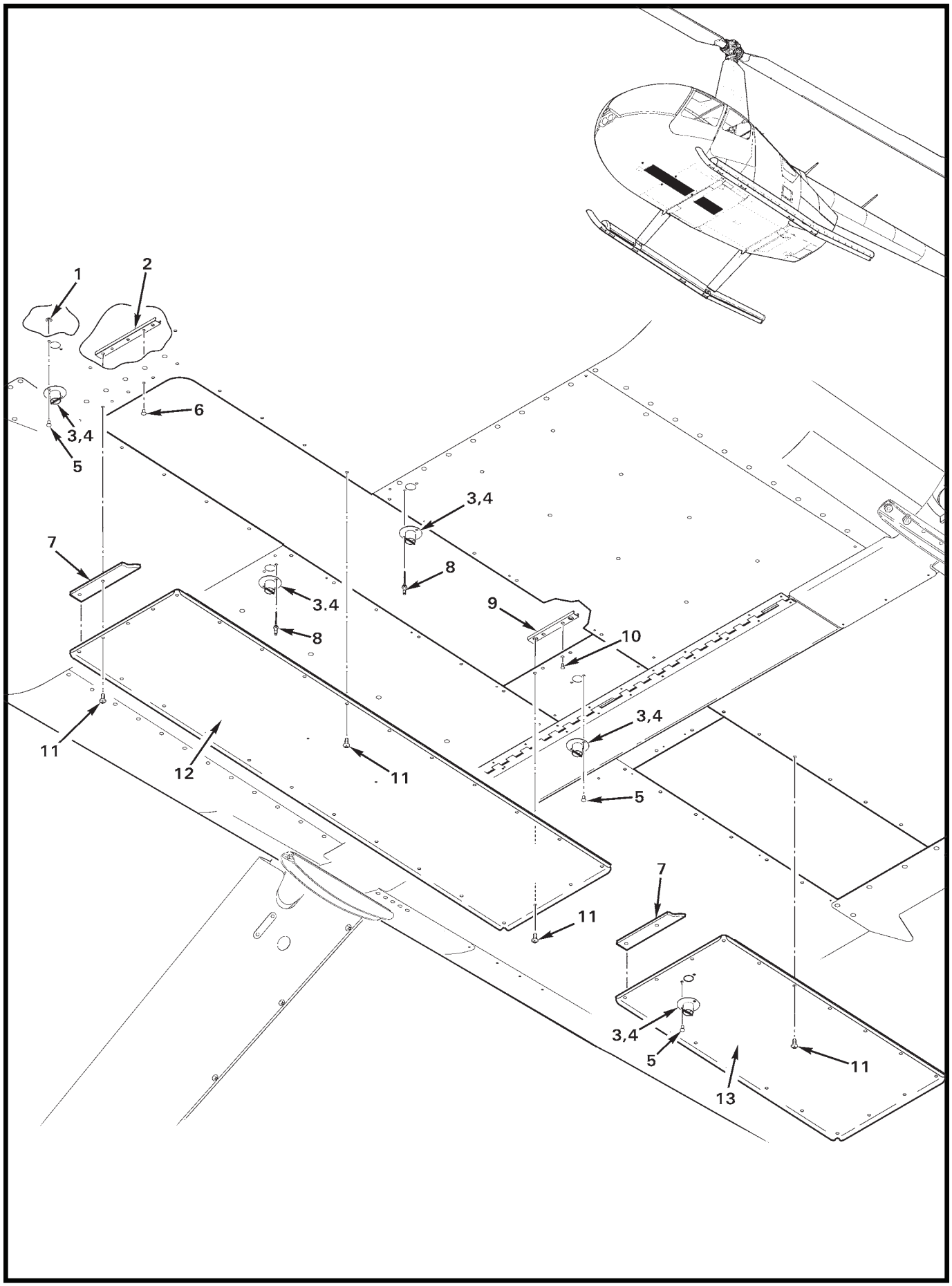
1
2
6
3,4
5
3,4
7
8
3.4
8
9
10
3,4
11
12
11
5
7
11
3,4
5
11
13

FIGURE AND INDEX NUMBER	PART NUMBER	DESCRIPTION	PARTS AVAIL	QTY PER ASSY
		ACCESS PANELS – BELLY (FLOAT SHIP)		
6-13-1	NAS620-5	Washer	X	2
2	A738-46	Gang Channel	X	1
3	D371-4	Valve Assembly (install using item 4)	X	5
4	B270-1	Sealant	X	A/R
5	MS20470AD4	Rivet	X	4
6	MS20426AD3	Rivet	X	2
7	A701-13	Foam Tape	X	A/R
8	NAS9301B-4-01	Rivet	X	4
9	A738-8	Gang Channel	X	1
10	NAS1097AD3	Rivet	X	2
11	B526-6	Screw	X	45
12	F794-3	Panel Assembly – Forward (Incl item 7)	X	1
13	F794-4	Panel Assembly – Aft (Incl items 3 [1], 4, 5 [2], and 7)	X	1

NOTES

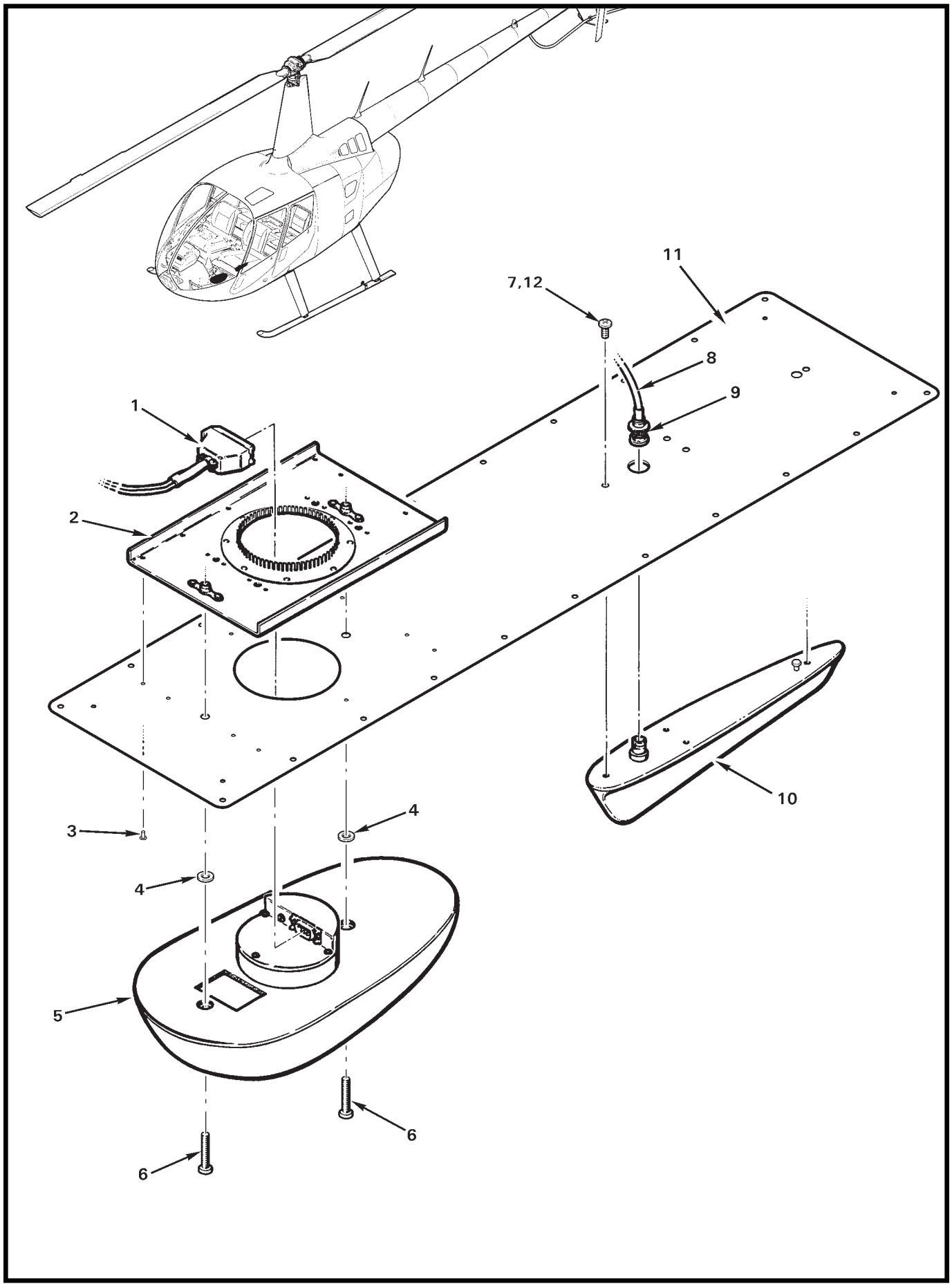
11
7,12
8
9
1
2
10
4
3
4
5
6
6

FIGURE AND INDEX NUMBER	PART NUMBER	DESCRIPTION	PARTS AVAIL	QTY PER ASSY
		ADF/MARKER BEACON ANTENNAS		
6-15-1	200-02586-0000*	Cable Assembly	O	1
2	047-04956-0003*	Doubler Plate	O	1
3	MS20470AD3	Rivet	X	10
4	NAS1149F0463P	Washer	X	2
5	KA44B*	Antenna – ADF (Ref; includes items 1, 2, and 6)		
6	C89-05534-0020*	Screw	O	2
7	MS27039C1-07	Screw (install using item 12 on threads)	X	4
8	F850-210	Cable (Ref)		
9	5225395-6	Plug	X	1
10	CI-102**	Antenna – Marker Beacon	X	1
11	F794	Panel (Ref)		
12	B270-11	Adhesive (1.69-oz bottle)	X	A/R

NOTES * Honeywell Bendix/King part no.
** Comant Industries part no.

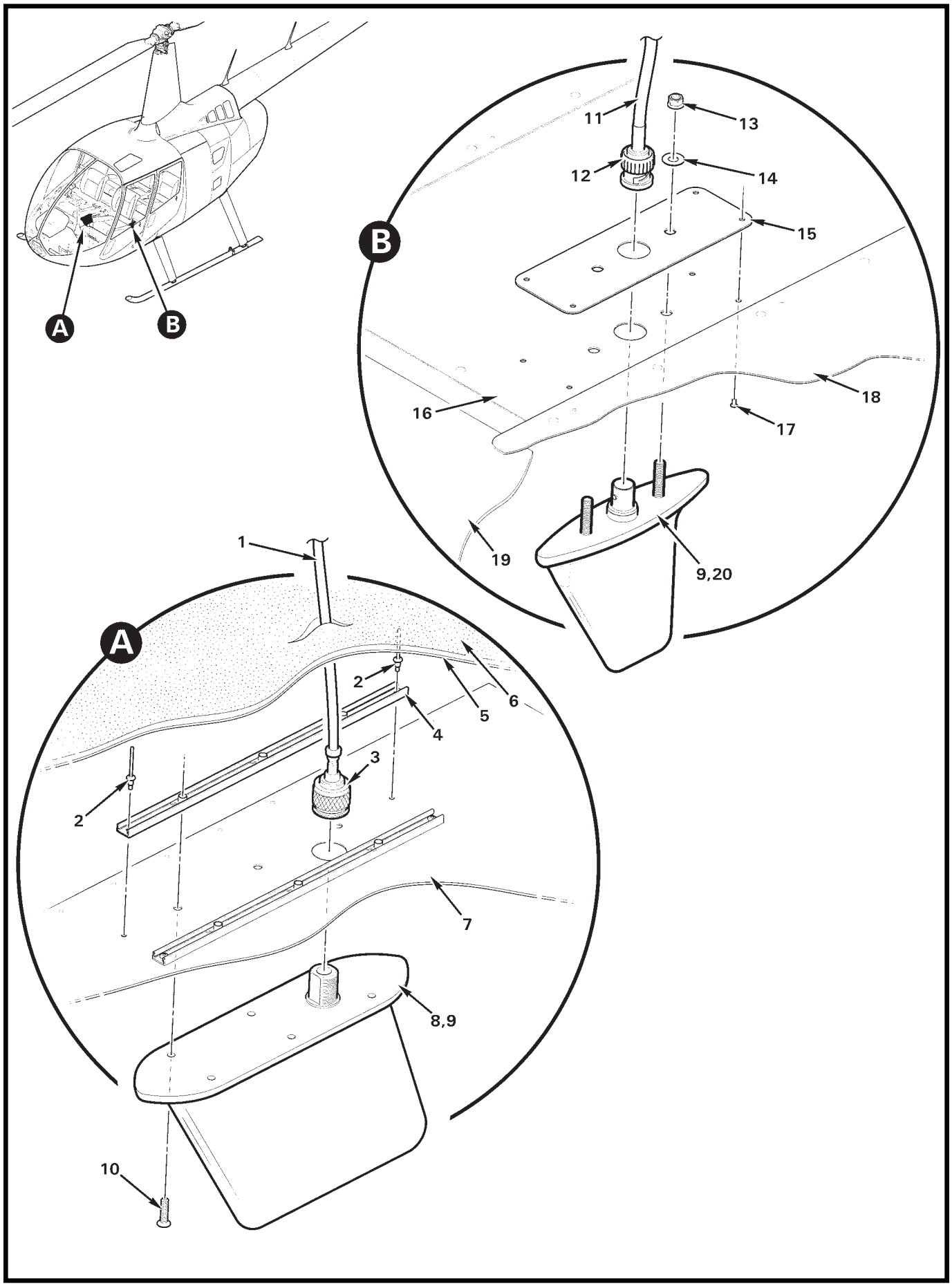

FIGURE 6-17 UHF AND DME ANTENNAS

FIGURE AND INDEX NUMBER	PART NUMBER	DESCRIPTION	PARTS AVAIL	QTY PER ASSY
		UHF AND DME ANTENNAS		
6-17-1	F850-1627	Cable (Ref)		
2	NAS9301B-4-01	Rivet	X	4
3	5225699-1	Plug	X	1
4	A738-34	Gang Channel	X	2
5	G232-2	Panel (Ref)		
6	F469-25	Liner (baggage floor; Ref)		
7	F388-1	Panel (Ref)		
8	CI-285	Antenna – UHF (400-960 MHz; install using item 9)	X	1
9	B270-1	Sealant	X	A/R
10	MS24694-C7	Screw	X	6
11	F850-452	Cable (Ref)		
12	5225395-6	Plug	X	1
13	MS21042L08	Nut	X	2
14	NAS1149FN816P	Washer	X	2
15	B322-12	Doubler	X	1
16	F794-2	Panel (Ref)		
17	MS20470AD3	Rivet	X	4
18	F387-1	Panel (Ref)		
19	F475-1	Cover Assembly (Ref)		
20	CI-105-16	Antenna – DME (960-1220 MHz; install using item 9)	X	1

NOTES

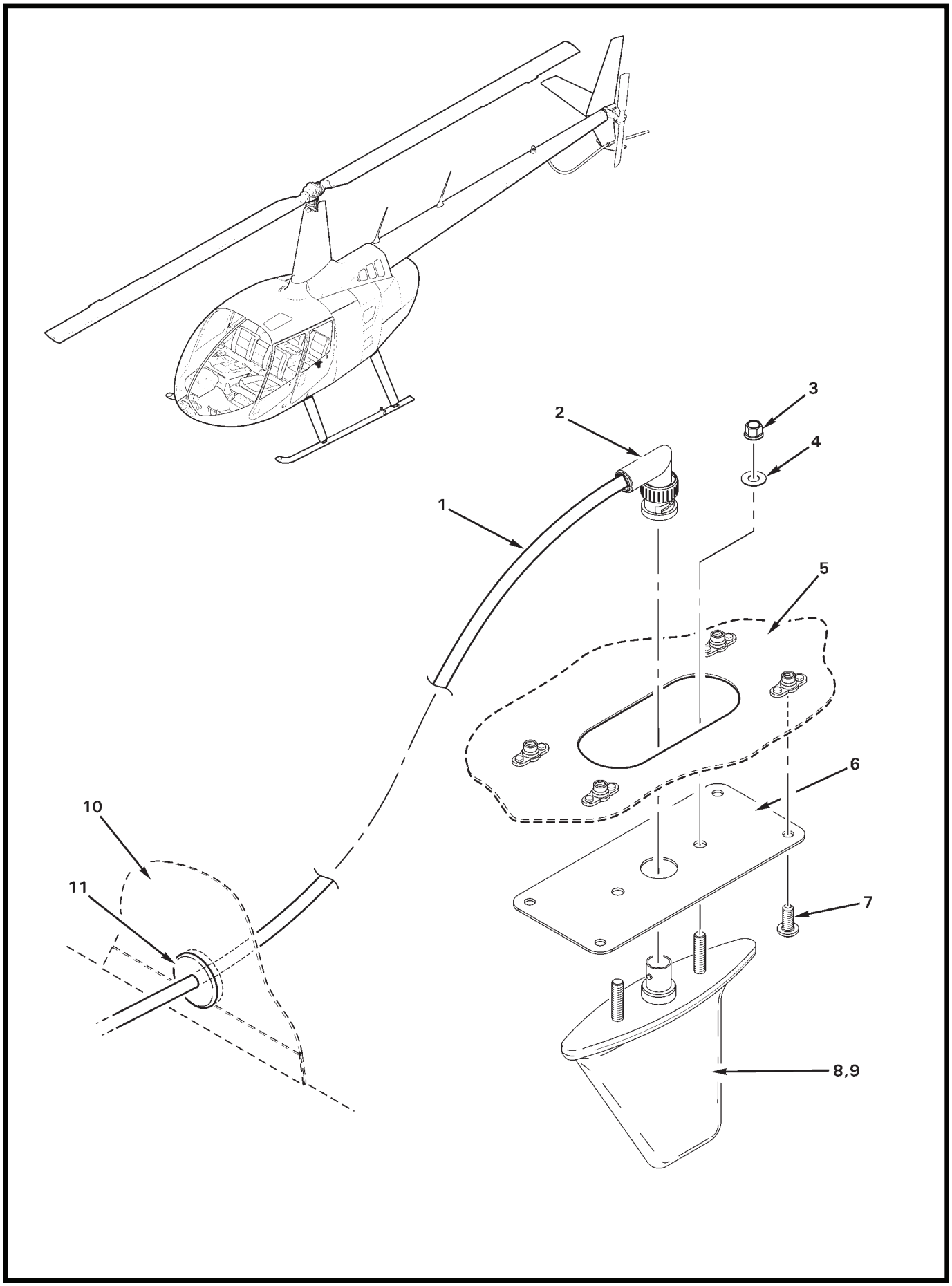

FIGURE 6-19 TRANSPONDER ANTENNA INSTALLATION

FIGURE AND INDEX NUMBER	PART NUMBER	DESCRIPTION	PARTS AVAIL	QTY PER ASSY
		TRANSPONDER ANTENNA INSTALLATION		
6-19-1	F850-264	Cable (Ref)		
2	5225973-4	Plug	X	1
3	MS21042L08	Nut	X	2
4	NAS1149FN816P	Washer	X	2
5	—	Belly Panel (Ref)		
6	B322-11	Plate	X	1
7	MS27039C0806	Screw	X	4
8	CI-105-16*	Antenna – Transponder (alternate part no. KA0060**, install using item 9)	X	1
9	B270-1	Sealant	X	A/R
10	G259	Panel (bulkhead; Ref)		
11	MS35489-5	Grommet	X	1

NOTES * Comant Industries part no.
** Honeywell Bendix/King part no.

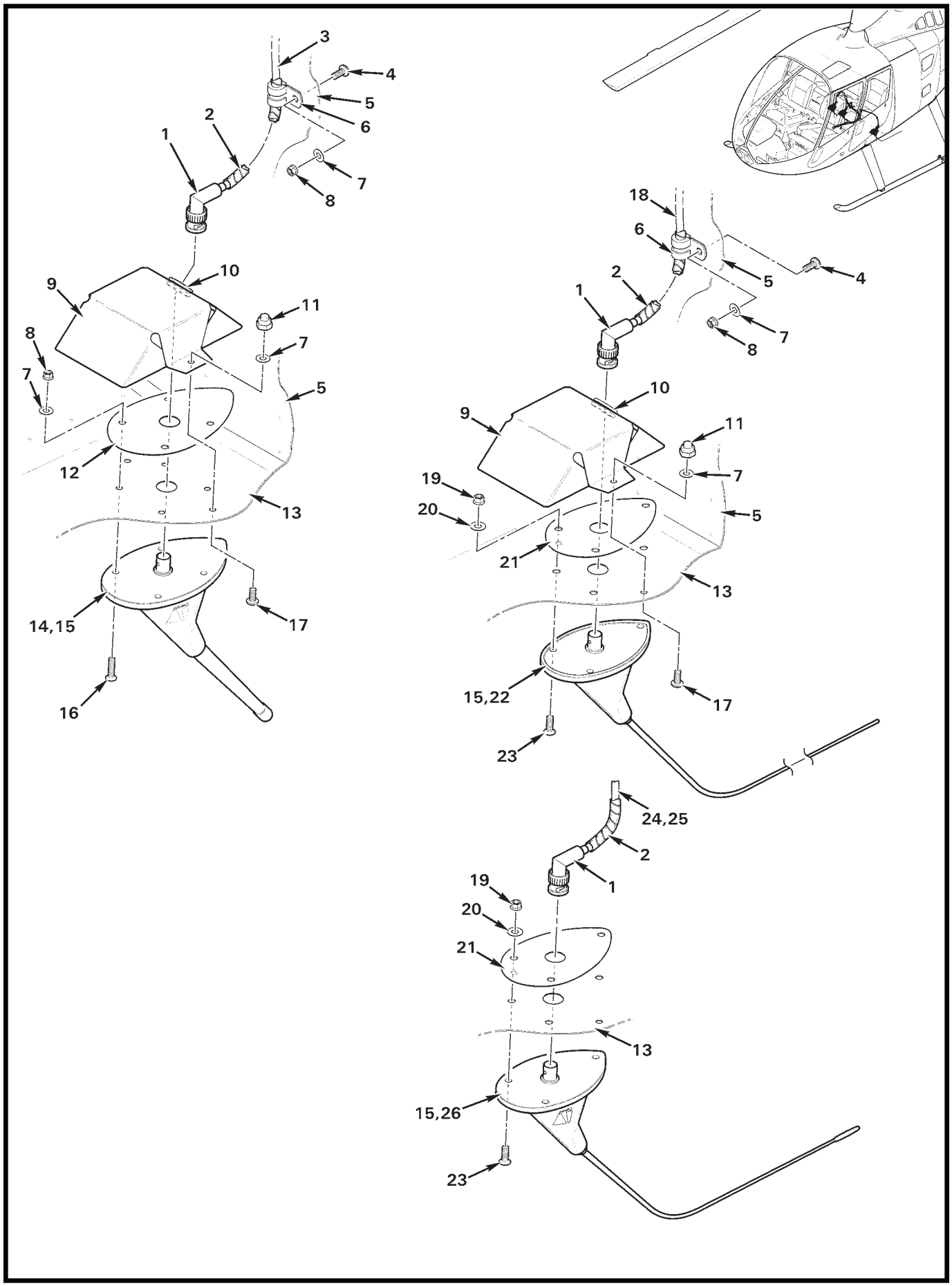
3
4
5
6
2
1
7
8
10
9
11
8
7
7
5
12
13
14,15
17
16
18
6
5
4
2
1
7
8
10
9
11
7
19
20
5
21
13
15,22
17
23
24,25
2
1
19
20
21
13
15,26
23

FIGURE AND INDEX NUMBER	PART NUMBER	DESCRIPTION	PARTS AVAIL	QTY PER ASSY
		AFT BELLY ANTENNAS		
6-21-1	5225973-4	Plug	X	1
2	B161-4	Spirap	X	A/R
3	F850-942	Cable (Ref, RH antenna installation)		
4	MS27039C0806	Screw	X	2
5	G259-1	Panel (Bulkhead; Ref)		
6	MS21919WDG4	Clamp	X	2
7	NAS1149FN816P	Washer	X	9
8	MS21042L08	Nut	X	9
9	D384-2	Cover	X	2
10	NAS557-8A	Grommet	X	2
11	B340-4	Nut	X	2
12	B322-4	Cover	X	1
13	F387-1	Panel (Ref)		
14	CI-177-20	Antenna – FM (450-700 MHz, install using item 15)	X	1
15	B270-1	Sealant	X	A/R
16	MS24694-C7	Screw	X	4
17	MS27039C0805	Screw	X	2
18	F850-1415	Cable (Ref, LH antenna installation)		
19	D210-3	Nut	X	3
20	NAS1149F0332P	Washer	X	3
21	B322-6	Cover	X	1
22	D721-1	Antenna – FM (220-225 MHz, install using item 15)	X	1
23	MS24694-C51	Screw	X	3
24	F850-941	Cable (Ref, LH antenna installation)		
25	F850-942	Cable (Ref, RH antenna installation)		
26	CI-292-3	Antenna – FM (138-174 MHz, install using item 15)	X	1

NOTES

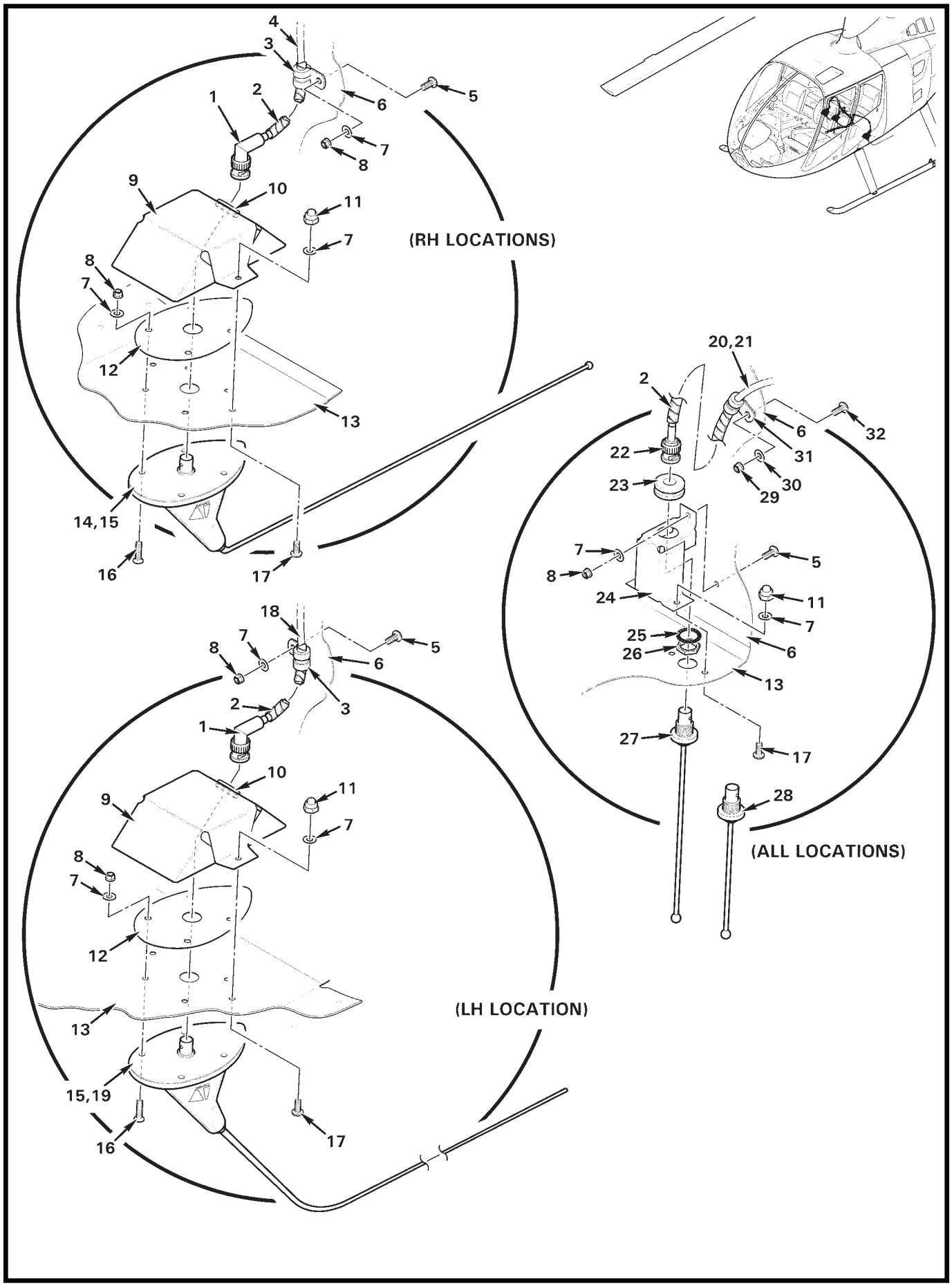
(RH LOCATIONS)
(ALL LOCATIONS)
(LH LOCATION)

FIGURE AND INDEX NUMBER	PART NUMBER	DESCRIPTION	PARTS AVAIL	QTY PER ASSY
		AFT BELLY ANTENNAS		
6-23-1	5225973-4	Plug	X	2
2	B161-4	Spirap	X	A/R
3	MS21919WDG4	Clamp	X	2
4	F850-1219	Cable (Ref, RH antenna installation)		
5	MS27039C0806	Screw	X	3
6	G259-1	Panel (Bulkhead; Ref)		
7	NAS1149FN816P	Washer	X	17
8	MS21042L08	Nut	X	11
9	D384-2	Cover	X	2
10	NAS557-8A	Grommet	X	2
11	B340-4	Nut	X	6
12	B322-4	Cover	X	2
13	F387-1	Panel (Ref)		
14	CI-222	Antenna – AM / FM (LH mount; 88-108 MHz, 550-1600 KHz, install using item 15)	X	1
15	B270-1	Sealant	X	A/R
16	MS24694-C7	Screw	X	8
17	MS27039C0805	Screw	X	6
18	F850-1214	Cable (Ref, LH antenna installation)		
19	CI-122	Antenna – Com (118-37 MHz, install using item 15)	X	1
20	F850-1012	Cable (Ref, LH antenna installation)		
21	F850-942	Cable (Ref, RH antenna installation)		
22	5225395-6	Plug	X	1
23	MS35489-5	Grommet	X	1
24	D563-1	Cover	X	1
25	—	Lockwasher	O	1
26	—	Nut	O	1
27	CI-273	Antenna – FM (403-512 MHz, includes items 25 and 26)	X	1
28	CI-271	Antenna – FM (403-512 MHz, includes items 25 and 26)	X	1
29	MS21042L08*	Nut	X	1
30	NAS1149FN816P*	Washer	X	1
31	MS21919WDG4	Clamp	X	1
32	MS27039C0806*	Screw	X	1

NOTES * On inboard RH location, replace existing screw, use existing nut and washer.

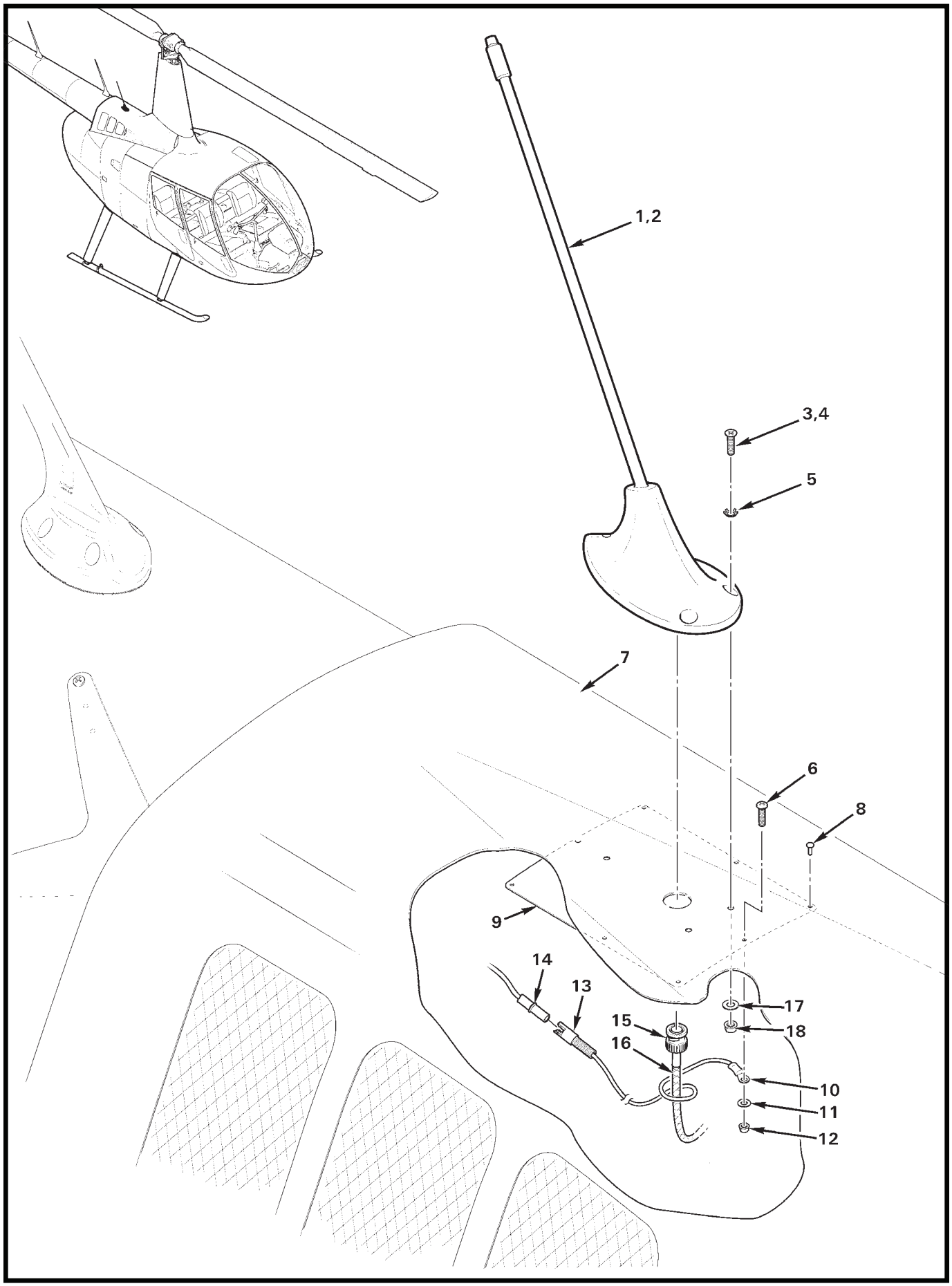

FIGURE 6-25 KANNAD ELT ANTENNA INSTALLATION

FIGURE AND INDEX NUMBER	PART NUMBER	DESCRIPTION	PARTS AVAIL	QTY PER ASSY
		KANNAD ELT ANTENNA INSTALLATION		
6-25-1	AV-300	Antenna (install using item 2 around base)	X	1
2	B270-1	Sealant	X	A/R
3	24-84-5*	Screw (install using item 4)	O	3
4	B270-4	Sealant	X	A/R
5	11-33-2*	Lockwasher (countersunk, included with item 1)	O	3
6	MS27039C0806**	Screw	X	1
7	F706-1	Cowling Assembly (Ref)		
8	MS20470AD3	Rivet	X	7
9	F837-4	Doubler	X	1
10	B260-3**	Terminal	X	1
11	NAS1149FN816P**	Washer	X	1
12	MS21042L08**	Nut	X	1
13	C049-15**	Wire Harness Assembly	X	1
	B263-10	Housing	X	1
	B263-1	Socket	X	1
14	F059-2227**	Wire (Ref)		
	B263-11	Housing	X	1
	B263-2	Pin	X	1
15	5225395-6*	Plug	X	1
16	B274-518	Cable – Coaxial	X	A/R
17	NAS1149F0316P	Washer	X	3
18	D210-3	Nut	X	3

NOTES * Kannad part no.
** Earlier Ships.

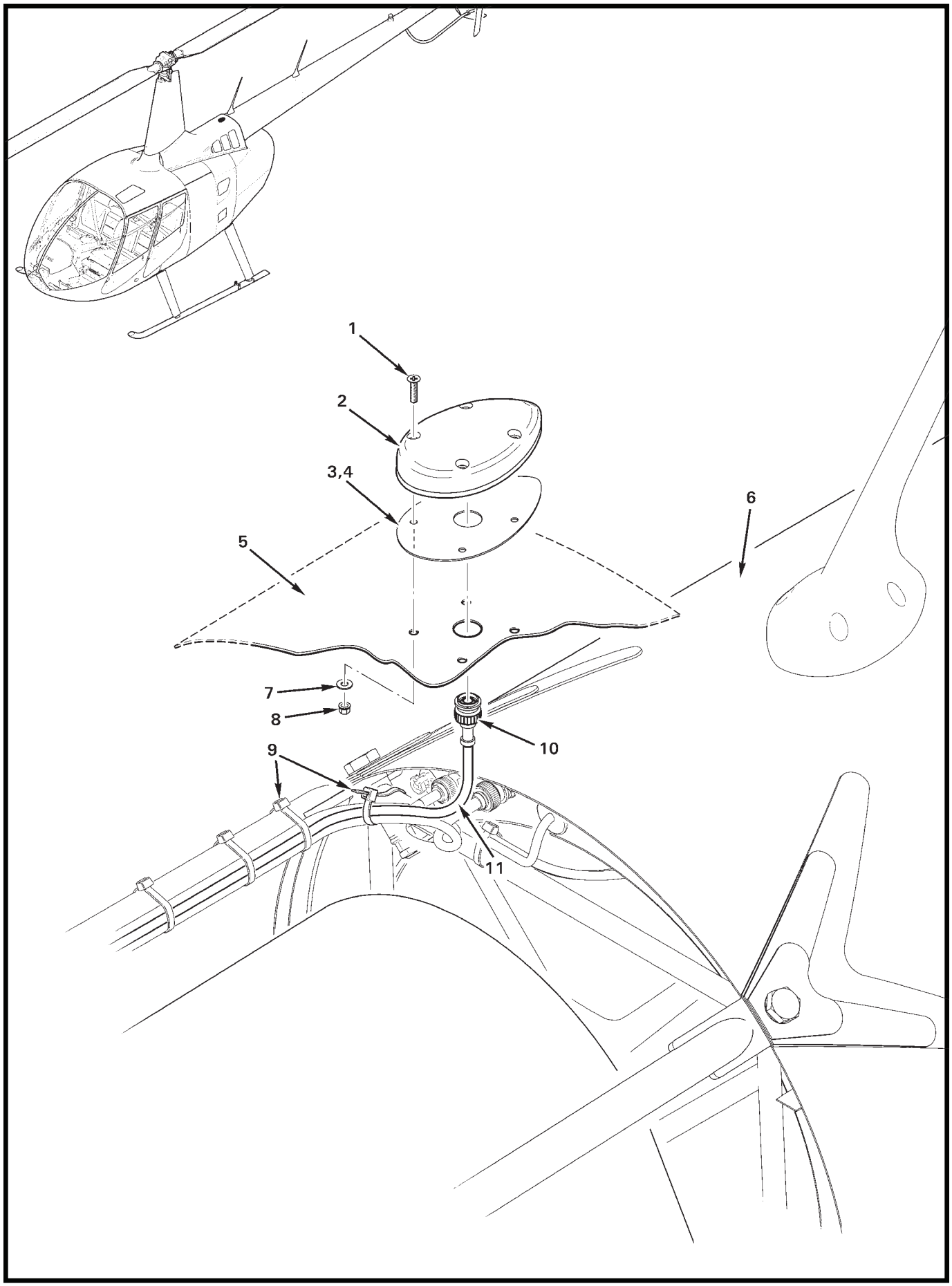

FIGURE 6-27 GPS ANTENNA INSTALLATION (COWL MOUNT)

FIGURE AND INDEX NUMBER	PART NUMBER	DESCRIPTION	PARTS AVAIL	QTY PER ASSY
		GPS ANTENNA INSTALLATION (COWL MOUNT)		
6-27-1	MS24694-C7	Screw	X	4
2	013-00235-00	Antenna – GPS (GA 35)	O	1
3	—	Gasket (rubber; install using item 4)	O	1
4	B270-1	Sealant	X	A/R
5	F706-1	Cowling – Tailcone (Ref)		
6	C023	Tailcone Assembly (Ref)		
7	NAS1149FN832P	Washer	X	4
8	MS21042L08	Nut	X	4
9	MS3367-4-9	Ty-Rap (or MS3367-5-9)	X	A/R
10	5225555-6	Plug	X	1
11	F850-468	Cable (Ref)		

NOTES

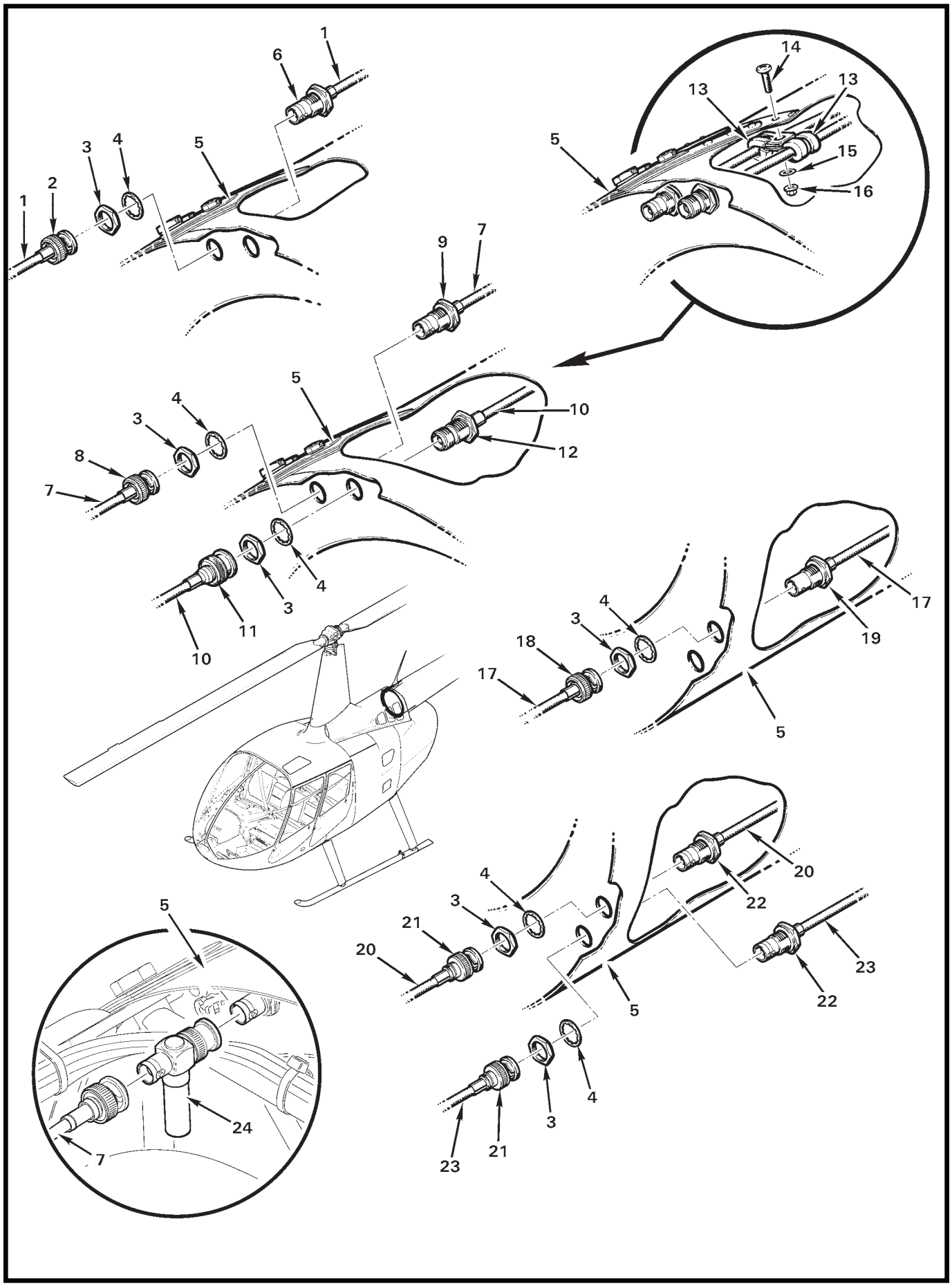
1
6
14
13
13
5
15
16
3
4
5
2
1
9
7
5
4
3
10
8
12
7
4
3
11
10
4
3
18
17
17
19
5
20
22
4
3
21
20
23
5
22
5
4
3
24
7
21
23

FIGURE AND INDEX NUMBER	PART NUMBER	DESCRIPTION	PARTS AVAIL	QTY PER ASSY
		TAILCONE ANTENNA CONNECTORS		
6-29-1	F850-1317	Cable – Coaxial (FM)	X	A/R
2	5225395-6	Plug (FM or Com)	X	1
3	—	Nut	O	1
4	—	Washer	O	1
5	C023	Tailcone (Ref)		
6	5225398-6*	Bulkhead Jack (FM or Com)	X	1
7	F850-212	Cable – Coaxial (Com or GPS/Com)	X	A/R
8	5225395-6	Plug (Com)	X	1
9	5225398-6*	Bulkhead Jack (Com)	X	1
10	F850-468	Cable – Coaxial (GPS)	X	A/R
11	5225555-6	Plug (GPS)	X	1
12	5225557-6*	Bulkhead Jack (GPS)	X	1
13	MS21919WDG3	Clamp (for use when aft-mount antennas are installed)	X	A/R
14	MS27039C0808	Screw	X	1
15	NAS1149FN816P	Washer	X	1
16	MS21042L08	Nut	X	1
17	C023-1013	Cable – Coaxial (VHF)	X	A/R
18	5221185-2	Plug (VHF)	X	1
19	5221221-2*	Bulkhead Jack (VHF)	X	1
20	C023-822	Cable – Coaxial (FM, lower aft tailcone installation)	X	A/R
21	5225395-6	Plug (FM)	X	A/R
22	5225398-6*	Bulkhead Jack (FM)	X	A/R
23	C023-821	Cable – Coaxial (FM, lower forward tailcone installation)	X	A/R
24	330-00067-00	Filter (for use when Garmin 400 or 500 series GPS is installed; see Figure 6-31 for alternate installation location)	X	A/R

NOTES * Includes items 3 and 4 as shown.

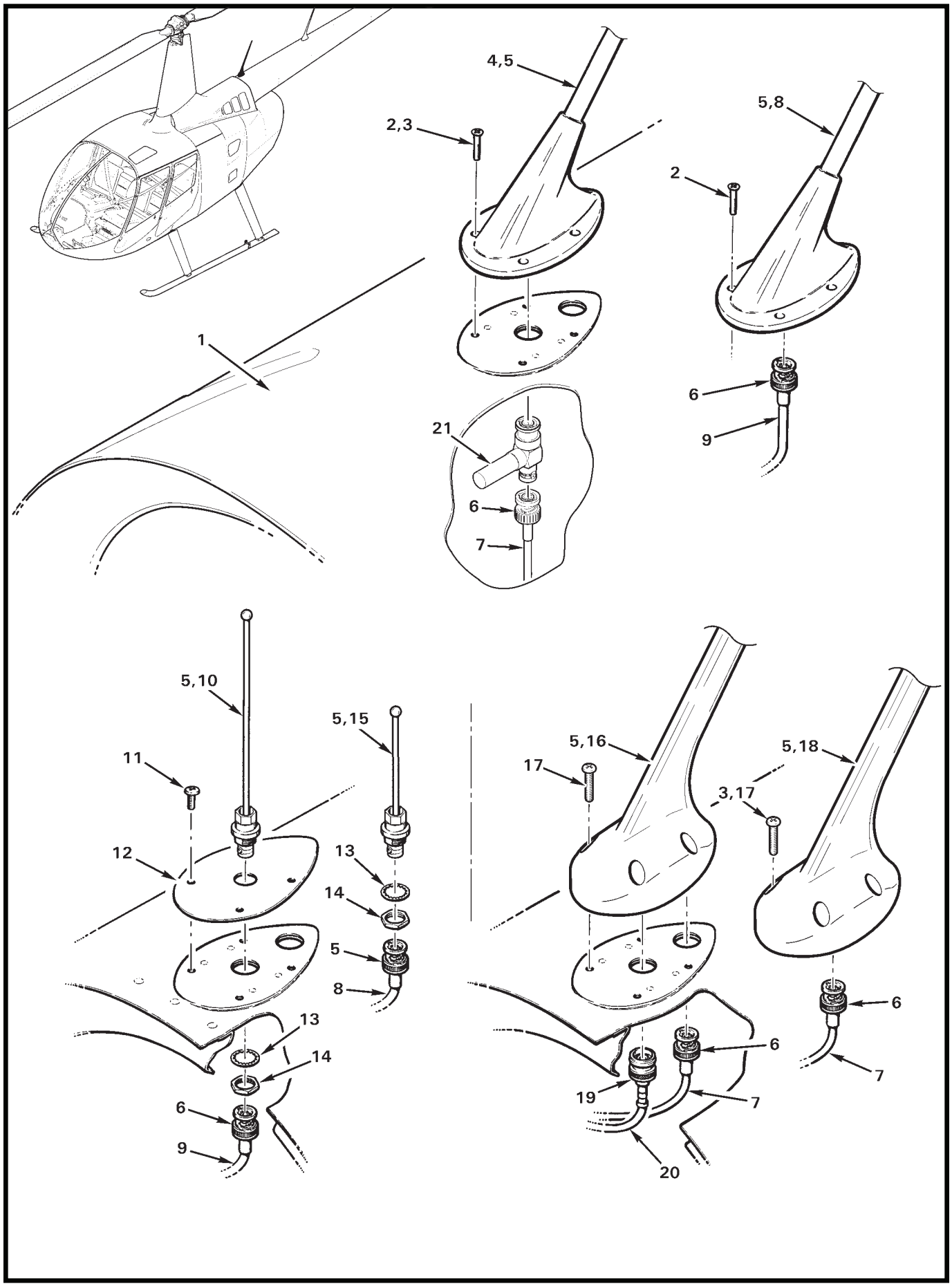

FIGURE 6-31 FORWARD UPPER TAILCONE ANTENNAS

FIGURE AND INDEX NUMBER	PART NUMBER	DESCRIPTION	PARTS AVAIL	QTY PER ASSY
		FORWARD UPPER TAILCONE ANTENNAS		
6-31-1	C023	Tailcone Assembly (Ref)		
2	MS24694-C7	Screw	X	4
3	B270-13	Sealant	X	A/R
4	CI-121*	Antenna – Com**(118-156 MHz)	X	1
5	B270-1	Sealant	X	A/R
6	5225395-6	Plug	X	1
7	F850-212	Cable (Ref)		
8	CI-177*	Antenna – FM (148-174 MHz)	X	1
	CI-177-1*	Antenna – FM (138-174 MHz)	X	1
	CI-177-20*	Antenna – FM (450-470 MHz)	X	1
9	F850-1213	Cable (Ref)		
10	CI-271*	Antenna – FM (400-430 MHz; includes items 13 and 14)	X	1
	CI-272-1*	Antenna – FM (336-390 MHz; includes items 13 and 14)	X	1
	CI-273*	Antenna – FM (403-512 MHz; includes items 13 and 14)	X	1
11	MS27039C0807	Screw	X	4
12	B322-4	Cover	X	1
13	—	Washer	O	1
14	—	Nut	O	1
15	CI-306*	Antenna – FM (800-870 MHz; includes items 13 and 14)	X	1
16	CI-2580-200*	Antenna – Com/GPS (Com 118-137 MHz, GPS 1575.42 ± 3 MHz. Do not use silicone based sealants with GPS antennas.)	X	1
17	MS27039C0815	Screw (for antennas with counter-bored holes)	X	4
	MS24694-C11	Screw (for antennas with counter-sunk holes)	X	4
18	CI-248-5*	Antenna – VHF** (118-137 MHz)	X	1
19	5225555-6	Plug	X	1
20	F850-468	Cable (Ref)		
21	330-00067-00	Filter (for use when Garmin 400 or 500 series GPS is installed; see Figure 6-29 for alternate installation location)	X	A/R

NOTES * Comant Industries part no. Seal antenna to tailcone using item 5.

** Seal around screw heads and fill fastener holes using item 3.

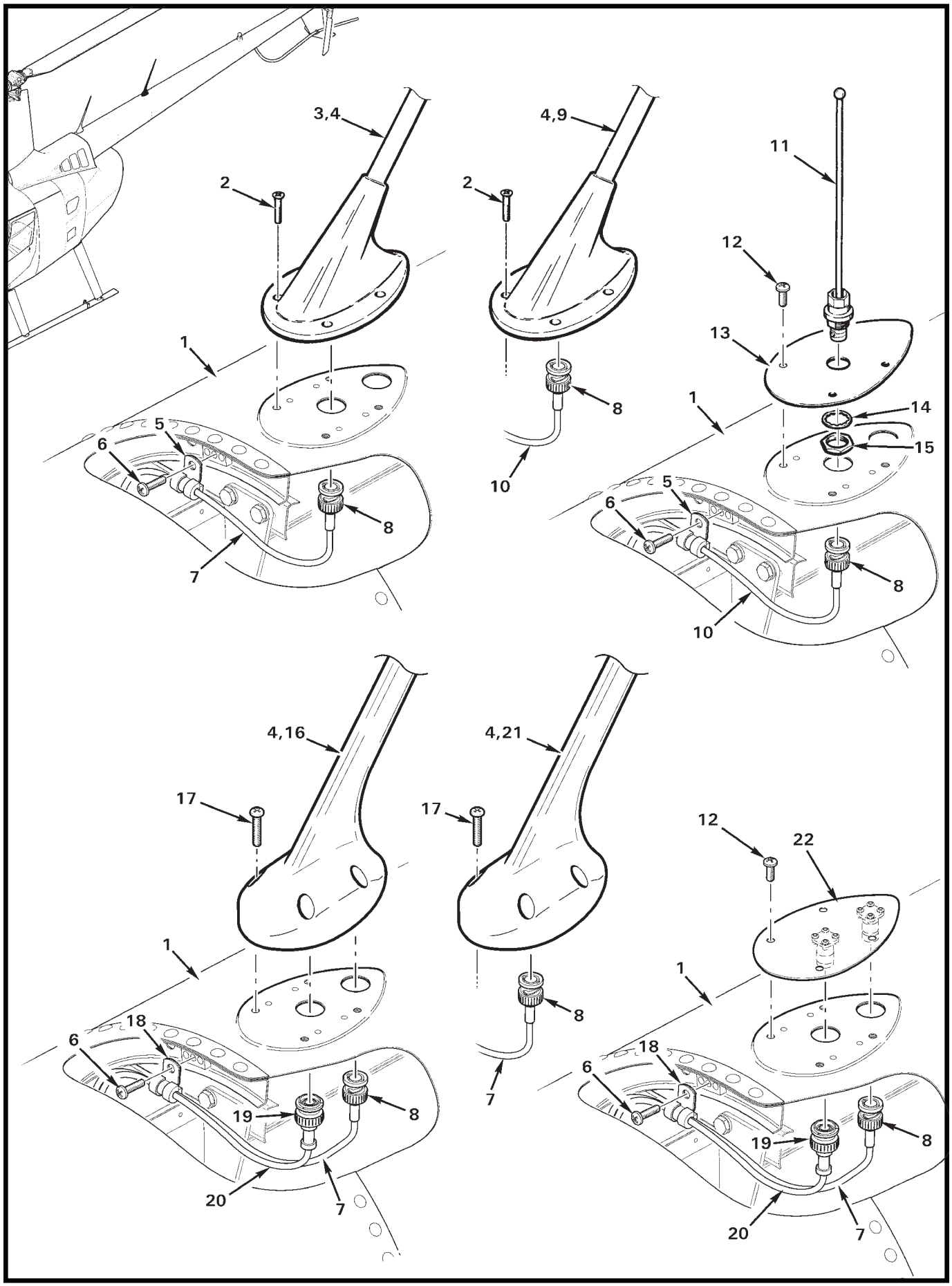

FIGURE 6-33 AFT UPPER TAILCONE ANTENNAS

FIGURE AND INDEX NUMBER	PART NUMBER	DESCRIPTION	PARTS AVAIL	QTY PER ASSY
		AFT UPPER TAILCONE ANTENNAS		
6-33-1	C023	Tailcone Assembly (Ref)		
2	MS24694-C7	Screw	X	4
3	CI-121*	Antenna – VHF (118-136 MHz)	X	1
4	B270-1	Sealant	X	A/R
5	MS21919WDG3	Clamp	X	1
6	MS27039C0810	Screw	X	1
7	F850-212	Cable (Ref)		
8	5225395-6	Plug (BNC)	X	1
9	CI-177*	Antenna – FM (148-174 MHz)	X	1
	CI-177-1*	Antenna – FM (138-174 MHz)	X	1
	CI-177-20*	Antenna – FM (450-470 MHz)	X	1
10	F850-1317	Cable (Ref)		
11	CI-271*	Antenna – FM (400-430 MHz; includes items 14 and 15)	X	1
	CI-272-1*	Antenna – FM (336-390 MHz; includes items 14 and 15)	X	1
	CI-273*	Antenna – FM (403-512 MHz; includes items 14 and 15)	X	1
12	MS27039C0807	Screw	X	4
13	B322-4	Cover Assembly	X	1
14	—	Washer	O	X
15	—	Nut	O	X
16	CI-2580-200*	Antenna – Com/GPS (Com 118-137 MHz, GPS 1575.42 ± 3 MHz. Do not use silicone based sealants with GPS antenna.)	X	1
17	MS27039C0815	Screw	X	1
18	MS21919WDG6	Clamp	X	1
19	5225555-6	Plug (TNC)	X	1
20	F850-468	Cable (Ref)		
21	CI-248-5*	Antenna – VHF (118-137 MHz; alternate to item 4)	X	1
22	B322-13	Cover Assembly (for COM/GPS antenna provisions)	X	1

NOTES * Comant Industries part no. Seal antenna to tailcone using item 4.

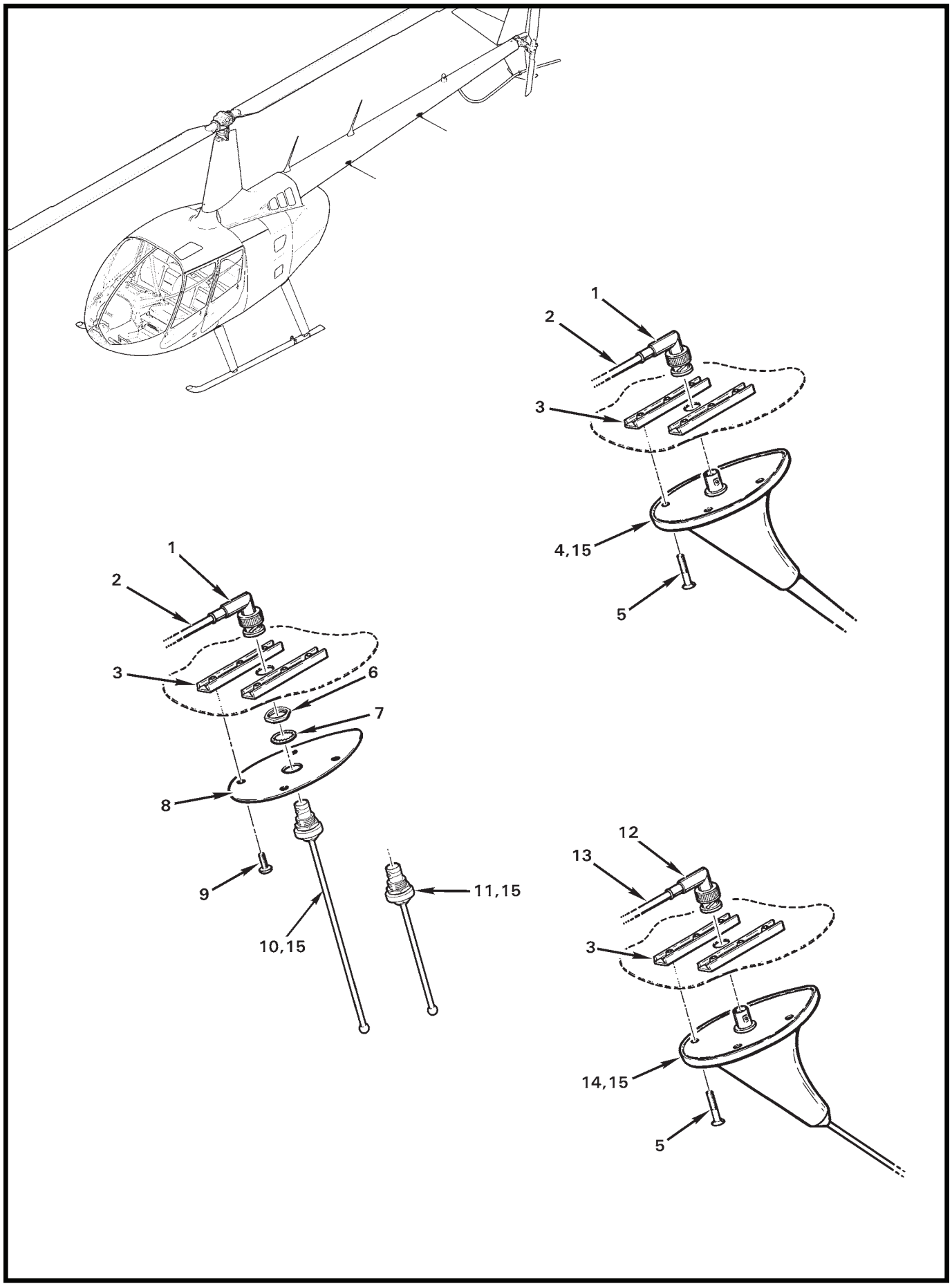

FIGURE 6-35 LOWER TAILCONE ANTENNAS

FIGURE AND INDEX NUMBER	PART NUMBER	DESCRIPTION	PARTS AVAIL	QTY PER ASSY
		LOWER TAILCONE ANTENNAS		
6-35-1	5225973-4	Plug (90° BNC)	X	1
2	C023-821	Cable (Ref, forward mount)		
	C023-822	Cable (Ref, aft mount)		
3	A738-21	Gang Channel (Ref)		
4	CI-177*	Antenna – FM (148-174 MHz)	X	1
	CI-177-1*	Antenna – FM (138-174 MHz)	X	1
	CI-177-20*	Antenna – FM (450-470 MHz)	X	1
5	MS24694-C7	Screw	X	4
6	—	Nut	O	1
7	—	Washer	O	1
8	B322-4	Cover	X	1
9	MS27039C0807	Screw	X	4
10	CI-271*	Antenna – FM (400-430 MHz, includes items 6 and 7)	X	1
	CI-272-1	Antenna – FM (336-390 MHz, includes items 6 and 7)	X	1
	CI-273*	Antenna – FM (430-470 MHz, includes items 6 and 7)	X	1
11	CI-306*	Antenna – FM (800-870 MHz, includes items 6 and 7)	X	1
12	5221402-2	Plug	X	1
13	C023-1013	Cable (Ref)		
14	CI-122*	Antenna – VHF (118-136 MHz; aft tailcone location only)	X	1
15	B270-1	Sealant	X	A/R

NOTES * Comant Industries part no. Seal antenna to tailcone using item 15.

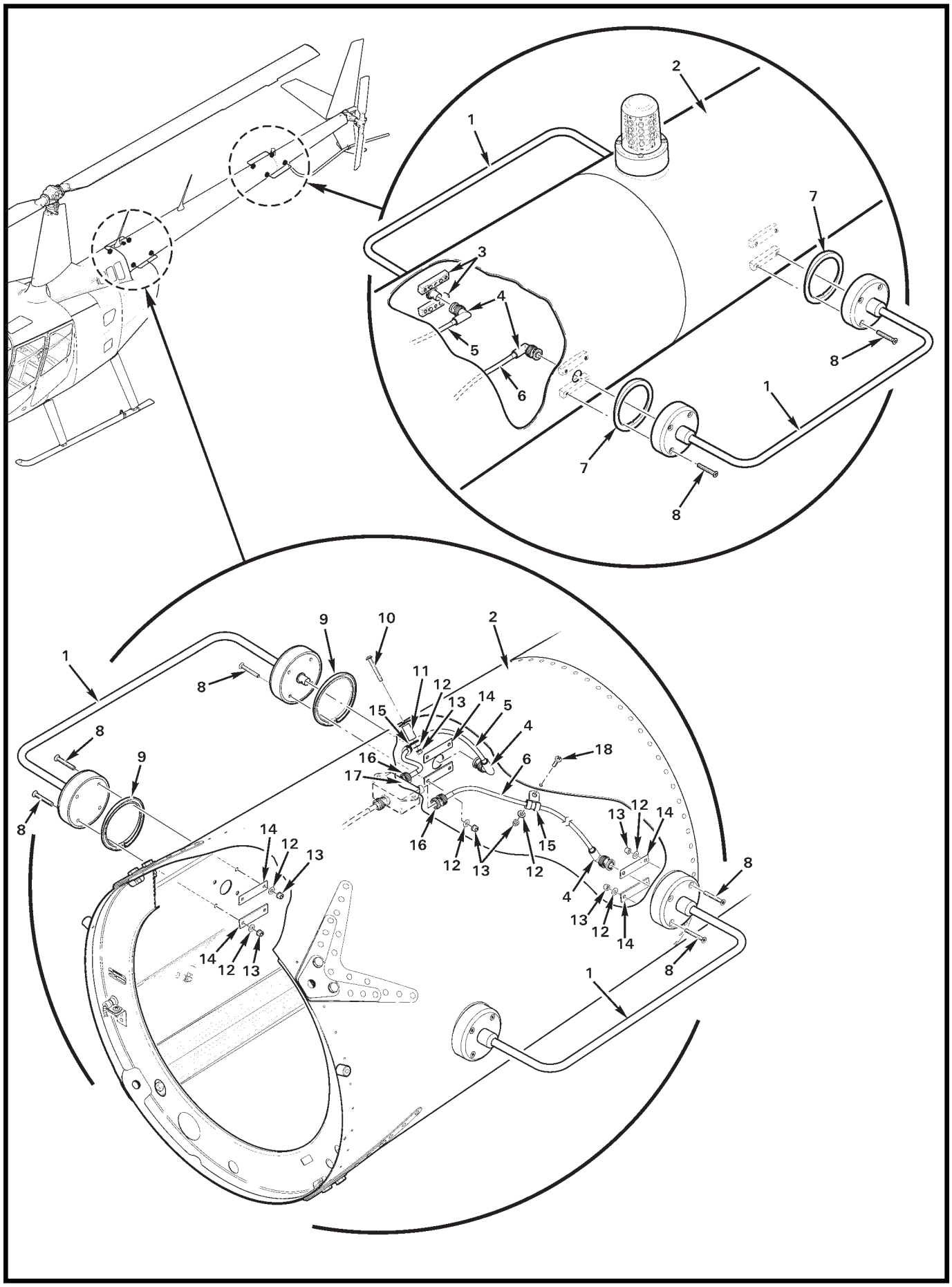

FIGURE 6-37 NAV ANTENNA INSTALLATION

FIGURE AND INDEX NUMBER	PART NUMBER	DESCRIPTION	PARTS AVAIL	QTY PER ASSY
		NAV ANTENNA INSTALLATION		
6-37-1	D20543	Antenna – Nav	X	2
2	C023-35	Tailcone Assembly (Ref)		
3	D322-1	Block Assembly (Ref)		
4	225973-4	Plug (90º BNC)	X	2
5	C023-1846	Cable (RH, Ref)		
6	C023-1845	Cable (LH, Ref)		
7	D322-3	Spacer (install with slots down)	X	4
8	MS24694-S16	Screw	X	16
9	D322-7	Spacer (install with slots down)	X	4
10	MS27039C0819	Screw	X	1
11	C130-56	Spacer	X	1
12	NAS1149FN816P	Washer	X	18
13	MS21042L08	Nut	X	18
14	B322-10	Spacer	X	8
15	MS21919WDG3	Clamp	X	2
16	225395-6	Plug	X	2
17	C20556-1	Combiner (Ref, see Figure 6-39)		
18	MS27039C0806	Screw	X	1

NOTES

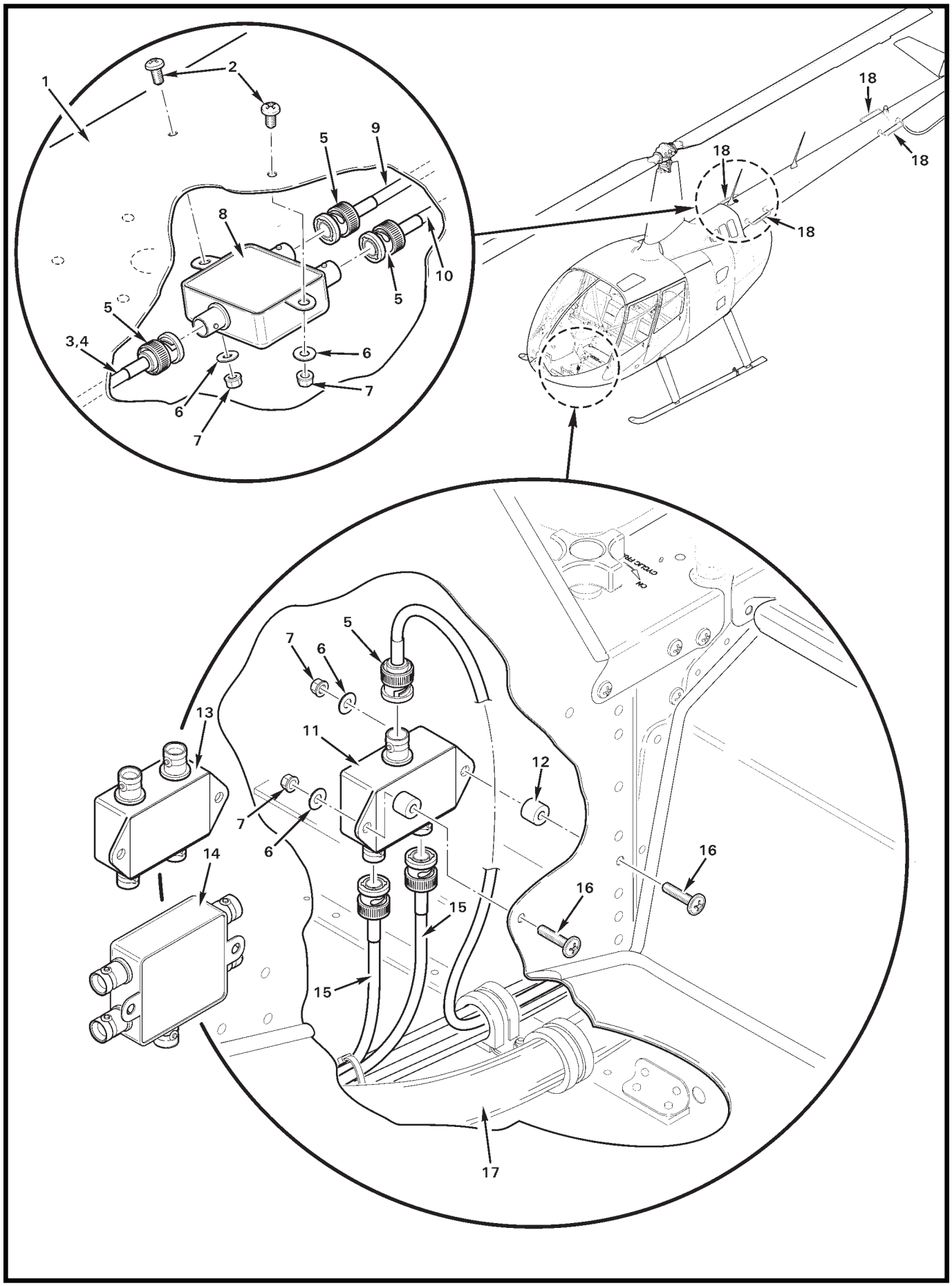

FIGURE 6-39 NAV ANTENNA COMBINER / DIPLEXER INSTALLATION

FIGURE AND INDEX NUMBER	PART NUMBER	DESCRIPTION	PARTS AVAIL	QTY PER ASSY
		NAV ANTENNA COMBINER / DIPLEXER INSTALLATION		
6-39-1	C023-23	Tailcone Assembly (or C023-34, or -35; Ref)		
2	MS27039C0805	Screw	X	2
3	C850-1844	Cable (Ref; VOR and Localizer installed)		
4	C850-1847	Cable (Ref; VOR and Localizer, with diplexer [item 11] installed)		
5	225395-6	Plug (BNC)	X	A/R
6	NAS1149FN816P	Washer	X	A/R
7	MS21042L08	Nut	X	A/R
8	C20556-1	Combiner	X	1
9	C023-1846	Cable (RH, Ref)		
10	C023-1845	Cable (LH, Ref)		
11	CI-507	Diplexer (single VOR/single Glideslope installed)	X	1
12	A130-33	Spacer	X	2
13	CI-505	Diplexer (dual VOR/single Glideslope installed)	X	1
14	CI-1125	Diplexer (dual VOR/dual Glideslope installed)	X	1
15	—	Cable (to avionics, Ref)		
16	AN525-832R12	Screw	X	2
17	F859	Harness Assembly – Cabin (Ref)		
18	D20543	NAV Antenna (Ref, see Figure 6-37)		

NOTES

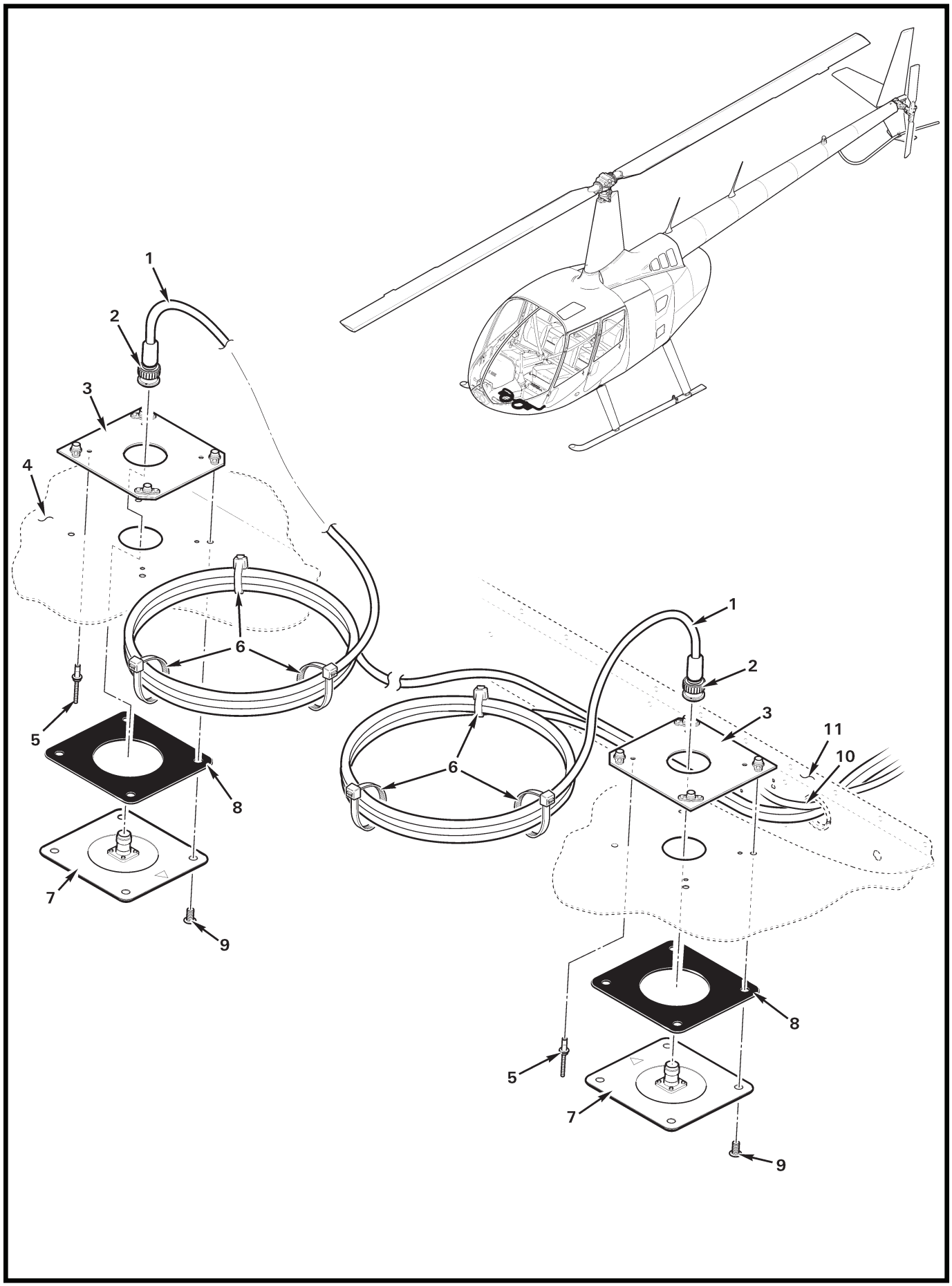

FIGURE 6-41 RADAR ALTIMETER ANTENNA INSTALLATION (FREEFLIGHT RA4000/4500)

FIGURE AND INDEX NUMBER	PART NUMBER	DESCRIPTION	PARTS AVAIL	QTY PER ASSY
		RADAR ALTIMETER ANTENNA INSTALLATION (FREEFLIGHT RA4000/4500)*		
6-41-1	—	Cable (to Radar Altimeter)	O	2
2	0129-0017-00	Connector (TNC)	O	2
3	B420-1	Plate Assembly	X	2
4	F272	Chin (ref)		
5	NAS9302B-4-02	Rivet (or NAS1921B04S02)	X	8
6	MS3367-5-9	Ty-Rap	X	A/R
7	9-1203-115-00**	Antenna (incl items 8 and 9)	O	2
8	—	Gasket	O	2
9	—	Screw	O	8
10	—	Cable (ref; wire -2432 to indicator if installed, -2720 to ARINC display if installed, -2727 to C/B, and -2728 to ground)		
11	G230	Bulkhead (ref)		

NOTES * See Figures 97-15, 97-17, and 97-19 for additional component installations.

** FreeFlight Systems part no.

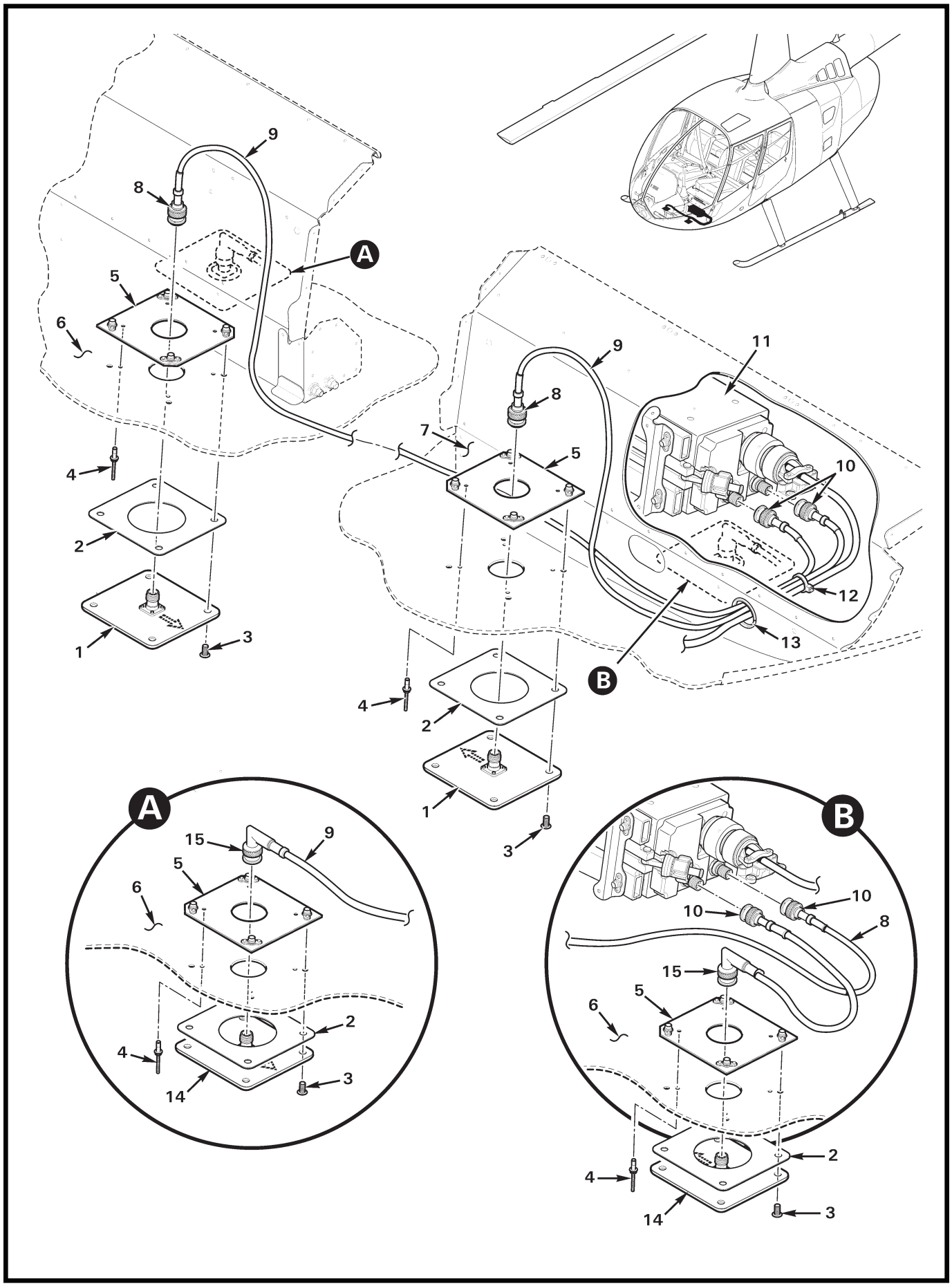

FIGURE 6-41B RADAR ALTIMETER ANTENNA INSTALLATION (GARMIN GRA 55)

FIGURE AND INDEX NUMBER	PART NUMBER	DESCRIPTION	PARTS AVAIL	QTY PER ASSY
		RADAR ALTIMETER ANTENNA INSTALLATION (GARMIN GRA 55)		
6-41B-1	S67-2002*	Antenna (standard location; left & right, incl items 2 and 3) . .	X	2
2	S67-200222*	Conductive Gasket	O	2
3	MS24694-S51	Screw	X	8
4	NAS9302B-4-02	Rivet	X	8
5	B420-1	Plate Assembly	X	2
6	F272	Chin (ref)		
7	G230	Bulkhead (ref)		
8	D261-121	Plug (standard antenna location only)	X	2
9	B274-518	Cable (Antenna Coax)	X	A/R
10	D261-121	Plug	X	2
11	GRA 55**	(010-00946-05**; ref, see Figure 97-19B)		
12	MS3367-4-9	Ty-Rap	X	A/R
13	NAS557-16A	Grommet	X	1
14	S67-2002*	Antenna (alternate location; left & right, incl items 2 and 3)	X	2
15	D261-122	Plug (alternate antenna location only)	X	2

NOTES * Sensor Systems part no.
** Garmin part no.

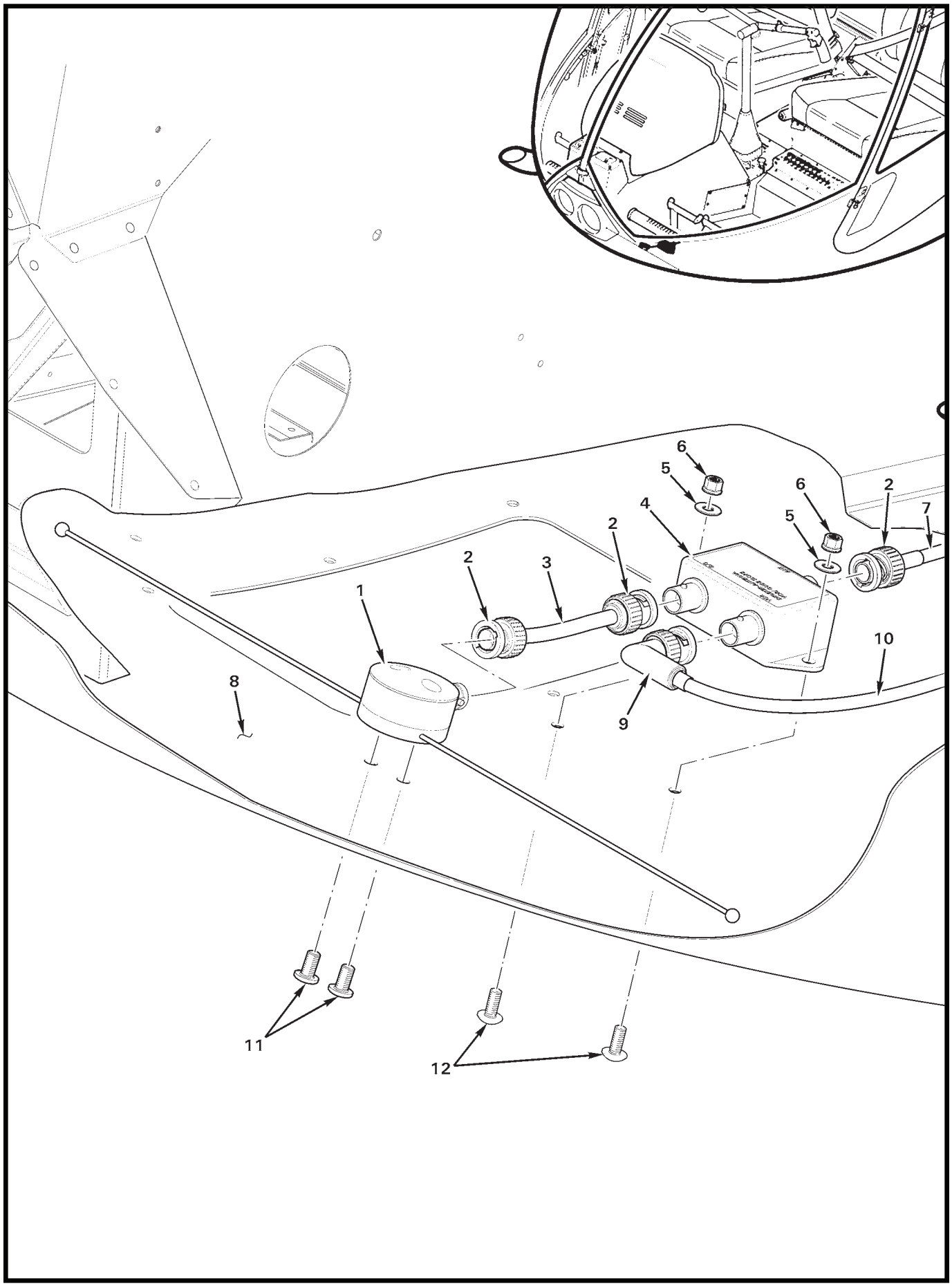

FIGURE 6-43 GLIDESLOPE ANTENNA INSTALLATION

FIGURE AND INDEX NUMBER	PART NUMBER	DESCRIPTION	PARTS AVAIL	QTY PER ASSY
		GLIDESLOPE ANTENNA INSTALLATION		
6-43-1	CI 193	Antenna (glideslope)	X	1
2	5225395-6	Plug (BNC)	X	3
3	F850-2730	Cable (Ref)		
4	CI 507	Diplexer	X	1
5	NAS1149FN816P	Washer	X	2
6	MS21042L08	Nut	X	2
7	F850-2731	Cable (Ref)		
8	F272-1	Chin (Ref)		
9	5225973-4	Plug (90° BNC)	X	1
10	F850-1847	Cable (Ref)		
11	A142-4	Screw	X	2
12	B526-6	Screw	X	2

NOTES

Intentionally Blank

CHAPTER 8

WEIGHT AND BALANCE

Figure	*Title*	*Page*
8-1	Ballast Installation	8.0

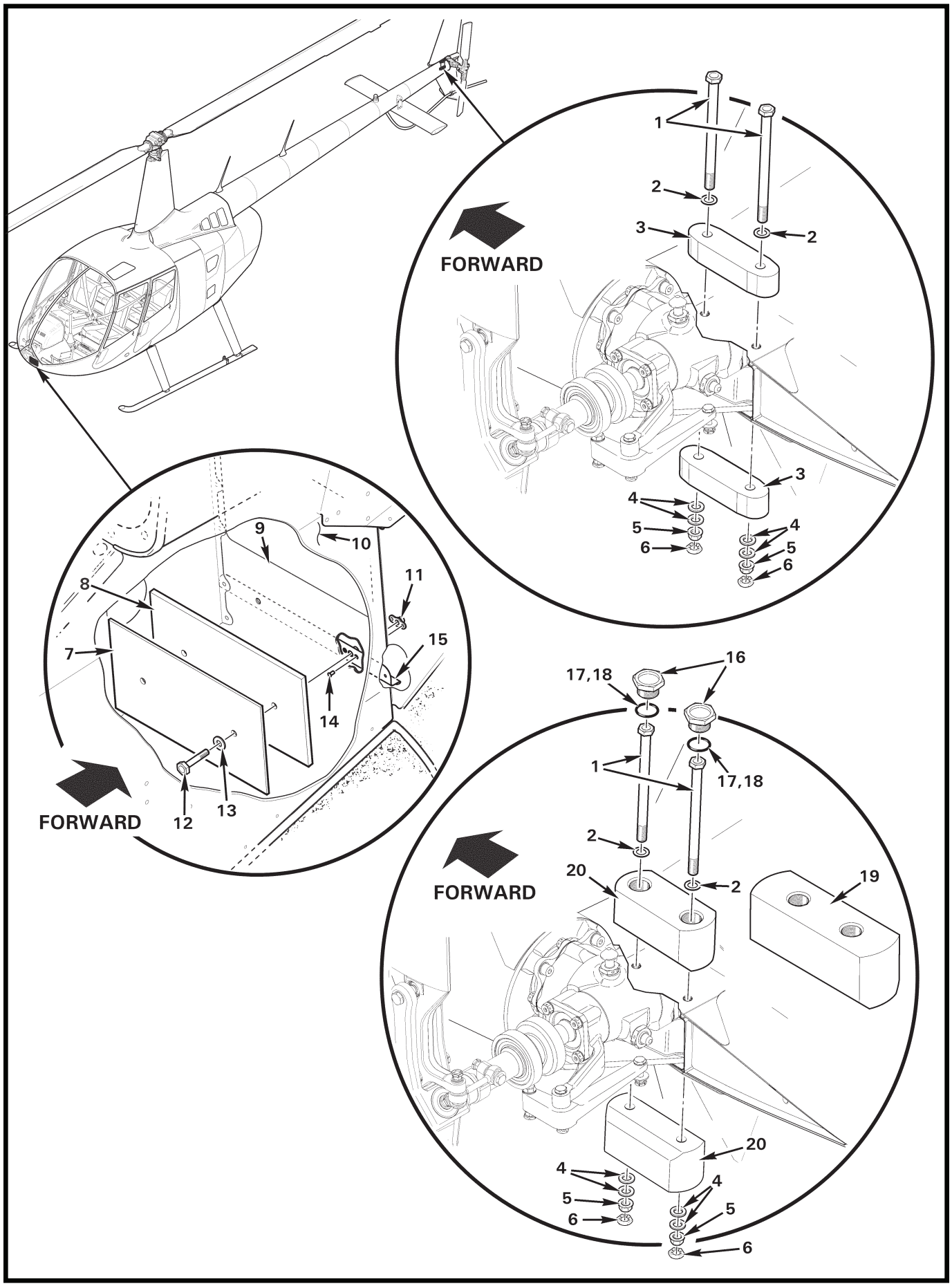
1
2
3
2
FORWARD
3
4
5
6
4
5
6
9
10
11
8
15
7
14
12
13
FORWARD
16
17,18
1
17,18
2
20
2
19
FORWARD
20
4
5
6
4
5
6

FIGURE AND INDEX NUMBER	PART NUMBER	DESCRIPTION	PARTS AVAIL	QTY PER ASSY
		BALLAST INSTALLATION		
8-1-1	NAS6606-78	Bolt (replaces NAS6606-47 Bolt)	X	2
2	NAS1149F0632P	Washer	X	2
3	D301-2*	Weight (1.5 lb; 4.65-in. x 1-in.)	X	A/R
4	NAS1149F0663P	Washer ([1] or [2] under nut as required for 1 to 4 threads exposed)	X	A/R
5	D210-6	Nut	X	2
6	B330-19	Palnut	X	2
7	A941-5**	Ballast Plate (0.25 lb)	X	A/R
8	A941-6**	Ballast Plate (1.25 lb)	X	A/R
9	F361-1	Console Panel (Ref)		
10	F033	Lower Console Assembly (Ref)		
11	MS21069L3	Nutplate (Ref)		
12	NAS6603	Bolt (Select bolt length to meet torque requirements per R66 MM § 20-30 Part E. NAS428-3A14 or shorter with excess threads exposed optional.)	X	2
13	NAS1149F0332P	Washer	X	2
14	NAS1097AD3	Rivet (Ref)		
15	C360-4	Stiffener Assembly (Ref)		
16	AN814-10D	Plug	X	2
17	A215-018	O-ring (install using item 18)	X	2
18	A257-18	Lube – O-ring	X	A/R
19	D301-8*	Weight (10.5 lb; 6.8-in. x 2.75-in.)	X	A/R
20	D301-4*	Weight (4.5 lb; 4.75-in. x 2-in.)	X	A/R
		* * *		
21	KI-174	Empennage 3.0 lb Ballast Installation Kit (Includes items 1 thru 6. See https://robinsonheli.com for kit contents and instructions.)	X	A/R

NOTES
* Maximum allowable empennage ballast is 9.0 lb (except Police & ENG versions). One upper and one lower weight are required. Available combinations provide total weight of 3, 6, 9, 12, 15, & 21 lb. Refer to R66 MM Chapter 8 to determine fixed ballast requirements.
** Maximum allowable nose ballast is 15 lb. Refer to R66 MM Chapter 8 to determine fixed ballast requirements.

Intentionally Blank

CHAPTER 9

GROUND HANDLING

Figure	*Title*	*Page*
9-1	Ground Handling Wheel (Cup and Cone Bearings Rev. M and prior) . .	9.0
9-3B	Ground Handling Wheel (Sealed Bearings Rev. N and Subsequent) . .	9.3A
9-5	Ground Handling Wheel – Pop-Out Floats (Cup and Cone Bearings Rev. F and prior)	9.4
9-7B	Ground Handling Wheel – Pop-Out Floats (Sealed Bearings Rev. G and subsequent)	9.7A
9-9	Ground Handling Ball Installation	9.8

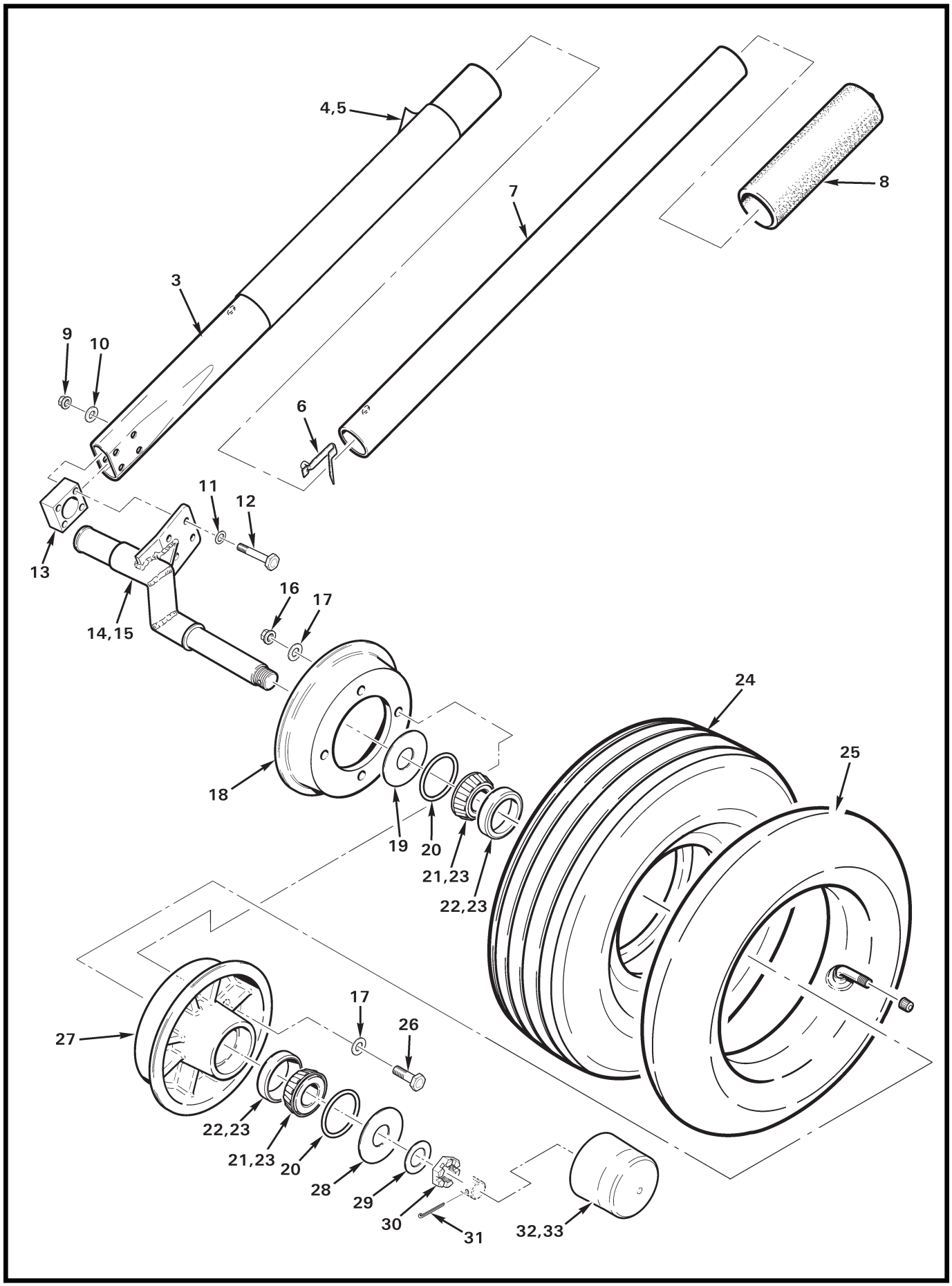

FIGURE 9-1 GROUND HANDLING WHEEL
(CUP AND CONE BEARINGS REV. M AND PRIOR)

FIGURE AND INDEX NUMBER	PART NUMBER	DESCRIPTION	PARTS AVAIL	QTY PER ASSY
		GROUND HANDLING WHEEL (CUP AND CONE BEARINGS REV. M AND PRIOR)		
9-1-1	C063-6	Ground Handling Wheel Assembly – RH (Incl items 3, 4, 8, 9 thru 14, and 16 thru 33)	X	1
2	C063-5	Ground Handling Wheel Assembly – LH (Incl items 3, 4, 6, 8, 9 thru 13, and 15 thru 33; not shown)	X	1
3	C718-4	Lever	X	1
4	MT935-16	Decal – "RIGHT, INSTALL FROM INBOARD SIDE / WARNING: GRIP..." (install on C063-6 [RH] ground handling wheel assembly only)	X	1
5	MT935-15	Decal – "LEFT, INSTALL FROM INBOARD SIDE / WARNING: GRIP..." (install on C063-5 [LH] ground handling wheel assembly only)	X	1
6	A795-4	Pin	X	1
7	C718-1	Tube Assembly (Incl items 6 and 8)	X	1
8	A601-5	Grip	X	1
9	MS21042L3	Nut	X	4
10	NAS1149F0363P	Washer	X	4
11	NAS620-10L	Washer	X	4
12	NAS6603-12	Bolt	X	4
13	C915-1	Spacer	X	1
14	C717-14	Shaft Assembly (RH)	X	1
15	C717-13	Shaft Assembly (LH, not shown)	X	1
16	MS21042L4	Nut	X	4
17	NAS1149F0432P	Washer	X	8
18	MT947-2	Rim	X	1
19	MT141-3	Washer	X	1
20	A215-123	O-Ring	X	2
21	C646-9*	Cone (contact RHC Customer Service for replacement)	X	2
22	C646-10*	Cup (contact RHC Customer Service for replacement)	O	2
23	A257-5	Grease	X	A/R
24	MT936-5	Tire	X	1
25	MT936-6	Tube – Inner	X	1
26	NAS6604-6	Bolt	X	4
27	MT947-1	Rim	X	1
28	A214-12	Washer	X	1
29	NAS1149F0832P	Washer (for shimming)	X	A/R
30	AN320-8	Nut	X	1

NOTES * Install using item 23.

Continues

FIGURE AND INDEX NUMBER	PART NUMBER	DESCRIPTION	PARTS AVAIL	QTY PER ASSY
		GROUND HANDLING WHEEL (CUP AND CONE BEARINGS REV. M AND PRIOR) (Cont'd)		
9-1-31	MS24665-285	Cotter Pin	X	1
32	A959-11	Cap (install using item 33)	X	1
33	B270-15	Adhesive	X	A/R

NOTES

Intentionally Blank

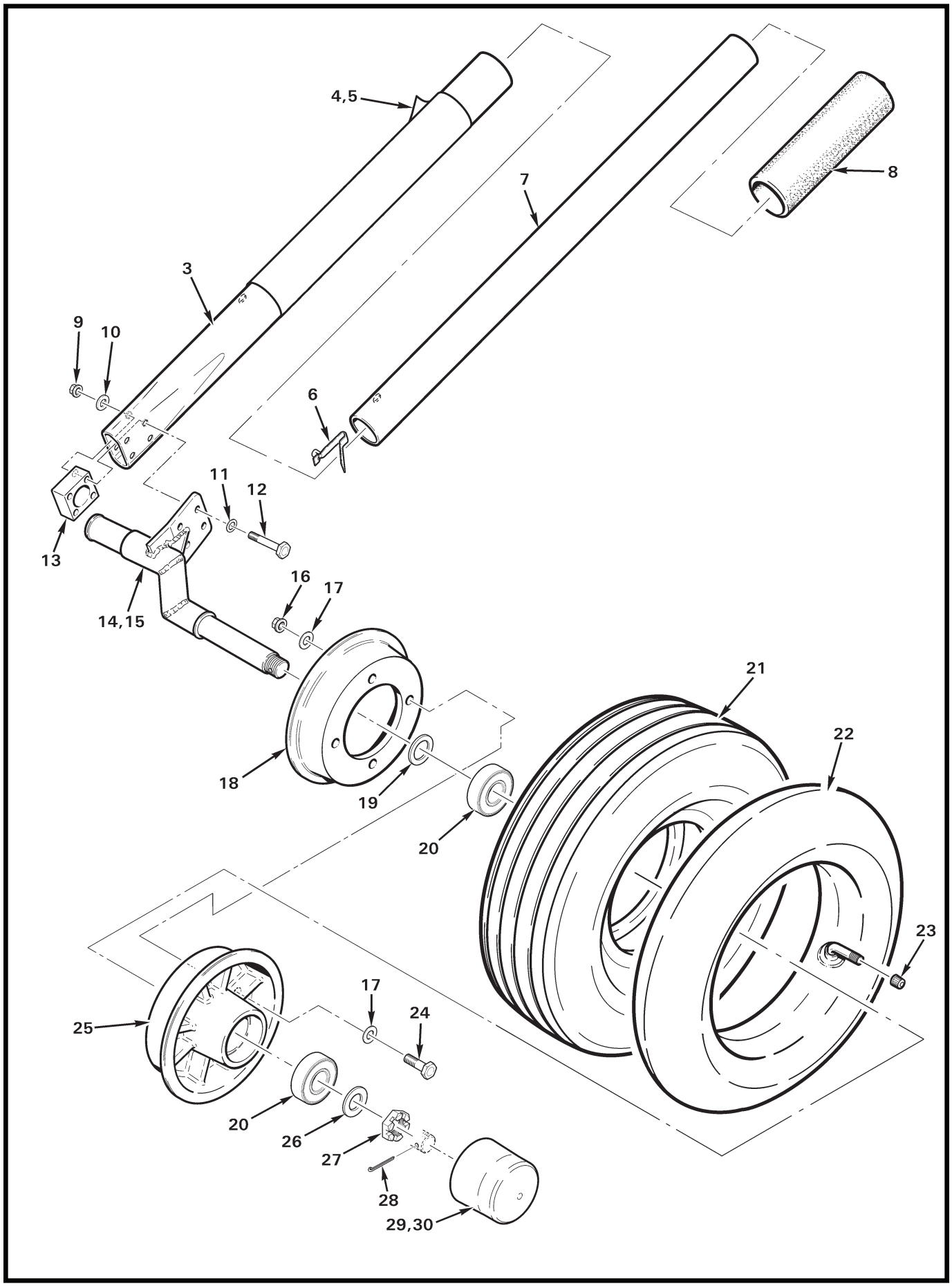

FIGURE 9-3B GROUND HANDLING WHEEL
(SEALED BEARINGS REV. N AND SUBSEQUENT)

FIGURE AND INDEX NUMBER	PART NUMBER	DESCRIPTION	PARTS AVAIL	QTY PER ASSY
		GROUND HANDLING WHEEL (SEALED BEARINGS REV. N AND SUBSEQUENT)		
9-3B-1	C063-6	Ground Handling Wheel Assembly – RH (Incl items 3, 4, 7, 9 thru 14, 16 thru 22, and 24 thru 30)	X	1
2	C063-5	Ground Handling Wheel Assembly – LH (Incl items 3, 5, 7, 9 thru 13, 15 thru 22, and 24 thru 30; not shown)	X	1
3	C718-4	Lever	X	1
4	MT935-16	Decal – "RIGHT, INSTALL FROM INBOARD SIDE / WARNING: GRIP..." (install on C063-6 [RH] ground handling wheel assembly only)	X	1
5	MT935-15	Decal – "LEFT, INSTALL FROM INBOARD SIDE / WARNING: GRIP..." (install on C063-5 [LH] ground handling wheel assembly only)	X	1
6	A795-4	Pin	X	1
7	C718-1	Tube Assembly (Incl items 6 and 8)	X	1
8	A601-5	Grip	X	1
9	D210-3	Nut	X	4
10	NAS1149F0363P	Washer	X	4
11	NAS620-10L	Washer	X	4
12	NAS6603-12	Bolt	X	4
13	C915-1	Spacer	X	1
14	C717-14	Shaft Assembly (RH)	X	1
15	C717-13	Shaft Assembly (LH, not shown)	X	1
16	D210-4	Nut	X	4
17	NAS1149F0432P	Washer	X	8
18	MT947-2	Rim	X	1
19	MT141-4	Washer (place chamfer against shaft shoulder)	X	1
20	6202-2RS	Bearing	X	2
21	MT936-5	Tire	X	1
22	MT936-6	Tube – Inner	X	1
23	—	Cap – Valve	O	1
24	NAS6604-6	Bolt	X	4
25	MT947-1	Rim	X	1
26	NAS1149F0863P	Washer (for shimming)	X	A/R
27	AN320-8	Nut	X	1
28	MS24665-285	Cotter Pin	X	1
29	A959-11	Cap (install using item 30)	X	1
30	B270-15	Adhesive	X	A/R

NOTES

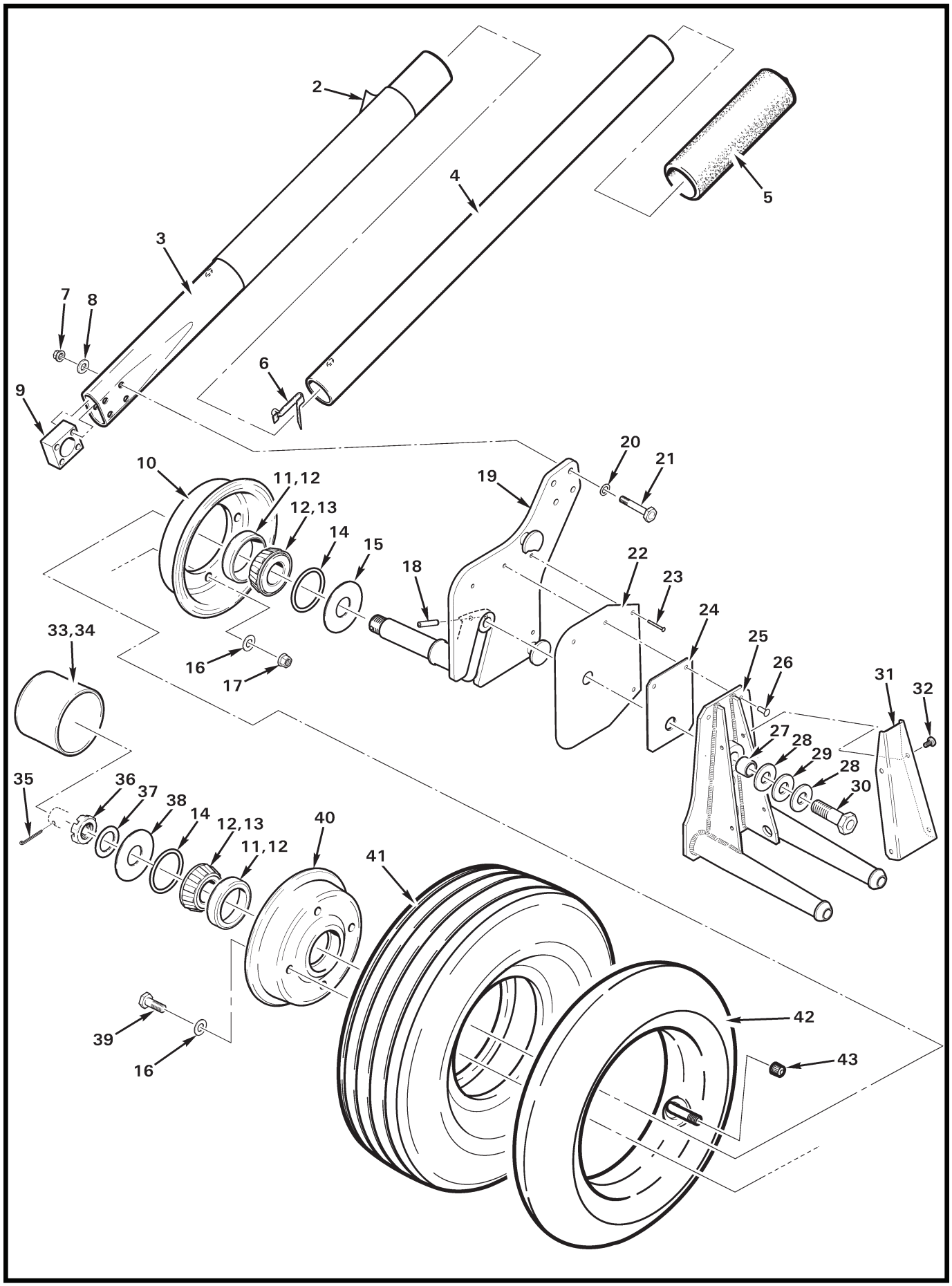

FIGURE 9-5 GROUND HANDLING WHEEL – POP-OUT FLOATS
(CUP AND CONE BEARINGS REV. F AND PRIOR)

FIGURE AND INDEX NUMBER	PART NUMBER	DESCRIPTION	PARTS AVAIL	QTY PER ASSY
		GROUND HANDLING WHEEL – POP-OUT FLOATS (CUP AND CONE BEARINGS REV. F AND PRIOR)		
9-5-1	MT980-1	Ground Handling Wheel Assembly – LH (Incl items 2 thru 4, and 7 thru 42)	X	1
	MT980-2	Ground Handling Wheel Assembly – RH (Incl items 2 thru 4, and 7 thru 42)	X	1
2	MT935-15	Decal (wheel installation instructions, LH)	X	1
	MT935-16	Decal (wheel installation instructions, RH; not shown)	X	1
3	C718-4	Lever	X	1
4	C718-1	Tube Assembly (Incl items 5 and 6)	X	1
5	A601-5	Grip	X	1
6	A795-4	Pin	X	1
7	MS21042L3	Nut	X	4
8	NAS1149F0363P	Washer	X	4
9	C915-1	Spacer	X	1
10	MT947-2	Rim	X	1
11	C646-10*	Cup (contact Customer Service for replacement)	O	2
12	A257-5	Grease	X	A/R
13	C646-9*	Cone (contact Customer Service for replacement)	X	2
14	A215-123	O-Ring	X	2
15	MT141-3	Washer	X	1
16	NAS1149F0432P	Washer	X	8
17	MS21042L4	Nut	X	4
18	MS16562-35	Spring Pin	X	1
19	MT982-13	Shaft Weldment (LH, shown)	X	1
	MT982-14	Shaft Weldment (RH, not shown)	X	1
20	NAS1149F0332P	Washer	X	4
21	NAS6603-13	Bolt	X	4
22	MT982-7	Pad	X	1
23	MS20615-4M	Rivet	X	2
24	MT981-6	Pad	X	1
25	MT981-1	Support Weldment	X	1
26	MS20426AD4	Rivet	X	2
27	06DU06	Bearing	X	1
28	MT141-1	Washer	X	2
29	MT141-2	Washer (teflon-coated, one side)	X	1
30	NAS6606-10	Bolt	X	1

NOTES * Install using item 12.

Continues

FIGURE AND INDEX NUMBER	PART NUMBER	DESCRIPTION	PARTS AVAIL	QTY PER ASSY
		GROUND HANDLING WHEEL – POP-OUT FLOATS (CUP AND CONE BEARINGS REV. F AND PRIOR) (Cont'd)		
9-5-31	MT981-7	Cover	X	1
32	MS35206-226	Screw	X	4
33	A959-11	Cap (install using item 34)	X	1
34	B270-15	Adhesive	X	A/R
35	MS24665-285	Cotter Pin	X	1
36	AN320-8	Nut	X	1
37	NAS1149F0832P	Washer (for shimming)	X	A/R
38	A214-12	Washer	X	1
39	NAS6604-6	Bolt	X	4
40	MT947-1	Rim	X	1
41	MT936-5	Tire	X	1
42	MT936-6	Tube – Inner (Incl item 43)	X	1
43	–	Cap – Valve	O	1

NOTES

Intentionally Blank

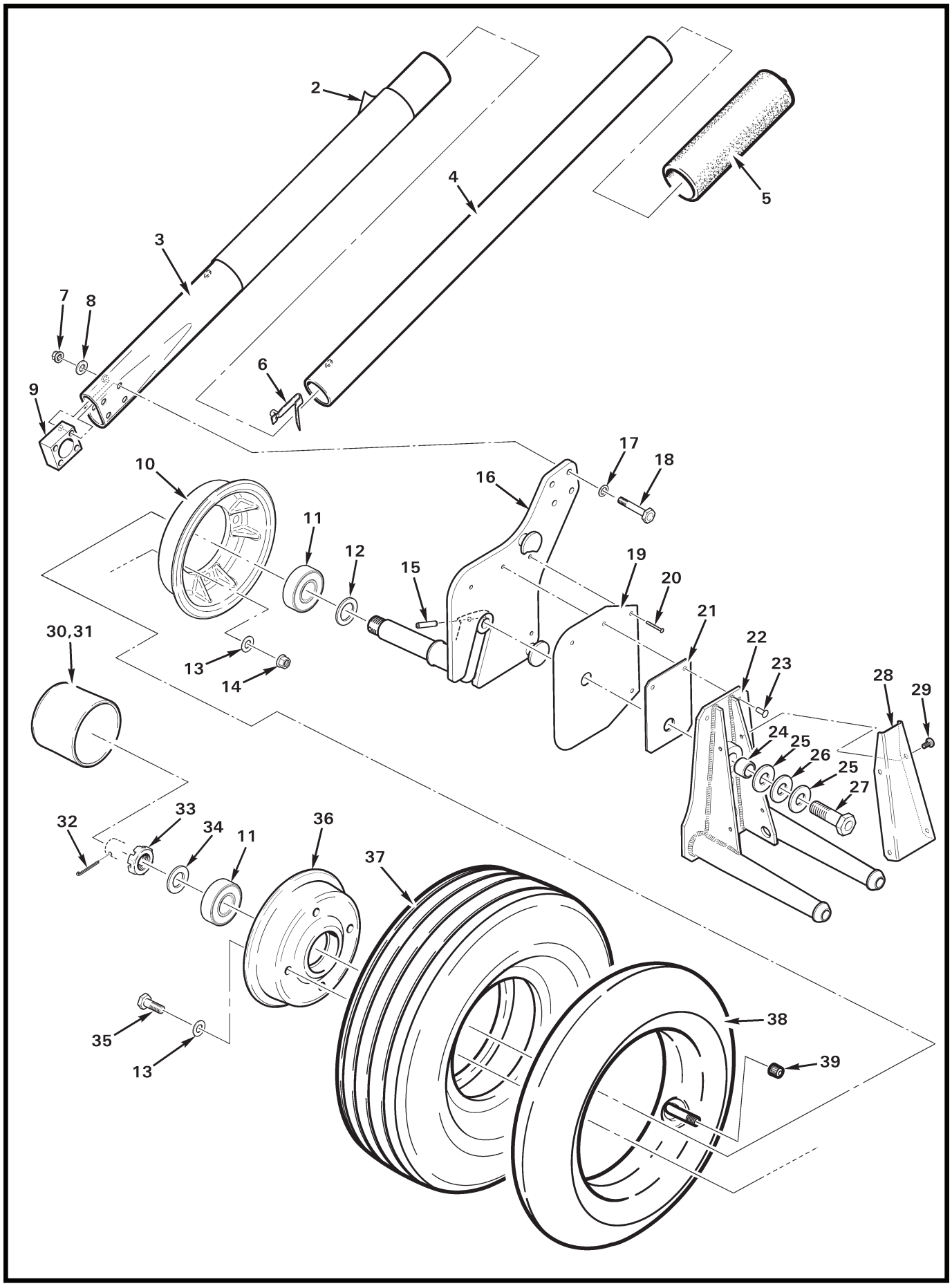

FIGURE 9-7B GROUND HANDLING WHEEL – POP-OUT FLOATS
(SEALED BEARINGS REV. G AND SUBSEQUENT)

FIGURE AND INDEX NUMBER	PART NUMBER	DESCRIPTION	PARTS AVAIL	QTY PER ASSY
		GROUND HANDLING WHEEL – POP-OUT FLOATS (SEALED BEARINGS REV. G AND SUBSEQUENT)		
9-7B-1	MT980-1	Ground Handling Wheel Assembly – LH (Incl items 2 thru 4, and 7 thru 38)	X	1
	MT980-2	Ground Handling Wheel Assembly – RH (Incl items 2 thru 4, and 7 thru 38)	X	1
2	MT935-15	Decal (wheel installation instructions, LH)	X	1
	MT935-16	Decal (wheel installation instructions, RH; not shown)	X	1
3	C718-4	Lever	X	1
4	C718-1	Tube Assembly (Incl items 5 and 6)	X	1
5	A601-5	Grip	X	1
6	A795-4	Pin	X	1
7	D210-3	Nut	X	4
8	NAS1149F0363P	Washer	X	4
9	C915-1	Spacer	X	1
10	MT947-2	Rim	X	1
11	6202-2RS	Bearing	X	2
12	MT141-4	Washer	X	1
13	NAS1149F0432P	Washer	X	8
14	D210-4	Nut (or MS21042L4)	X	4
15	MS16562-35	Spring Pin	X	1
16	MT982-13	Shaft Weldment (LH, shown)	X	1
	MT982-14	Shaft Weldment (RH, not shown)	X	1
17	NAS1149F0332P	Washer	X	4
18	NAS6603-13	Bolt	X	4
19	MT982-7	Pad	X	1
20	MS20615-4M	Rivet	X	2
21	MT981-6	Pad	X	1
22	MT981-1	Support Weldment	X	1
23	MS20426AD4	Rivet	X	2
24	06DU06	Bearing	X	1
25	MT141-1	Washer	X	2
26	MT141-2	Washer (teflon-coated, one side)	X	1
27	NAS6606-10	Bolt	X	1
28	MT981-7	Cover	X	1
29	MS35206-226	Screw	X	4
30	A959-11	Cap (install using item 31)	X	1

NOTES

Continues

FIGURE AND INDEX NUMBER	PART NUMBER	DESCRIPTION	PARTS AVAIL	QTY PER ASSY
		GROUND HANDLING WHEEL – POP-OUT FLOATS (SEALED BEARINGS REV. G AND SUBSEQUENT) (Cont'd)		
9-7B-31	B270-15	Adhesive	X	A/R
32	MS24665-285	Cotter Pin	X	1
33	AN320-8	Nut	X	1
34	NAS1149F0863P	Washer	X	1
35	NAS6604-6	Bolt	X	4
36	MT947-1	Rim	X	1
37	MT936-5	Tire	X	1
38	MT936-6	Tube – Inner (Incl item 39)	X	1
39	–	Cap – Valve	O	1

NOTES

Intentionally Blank

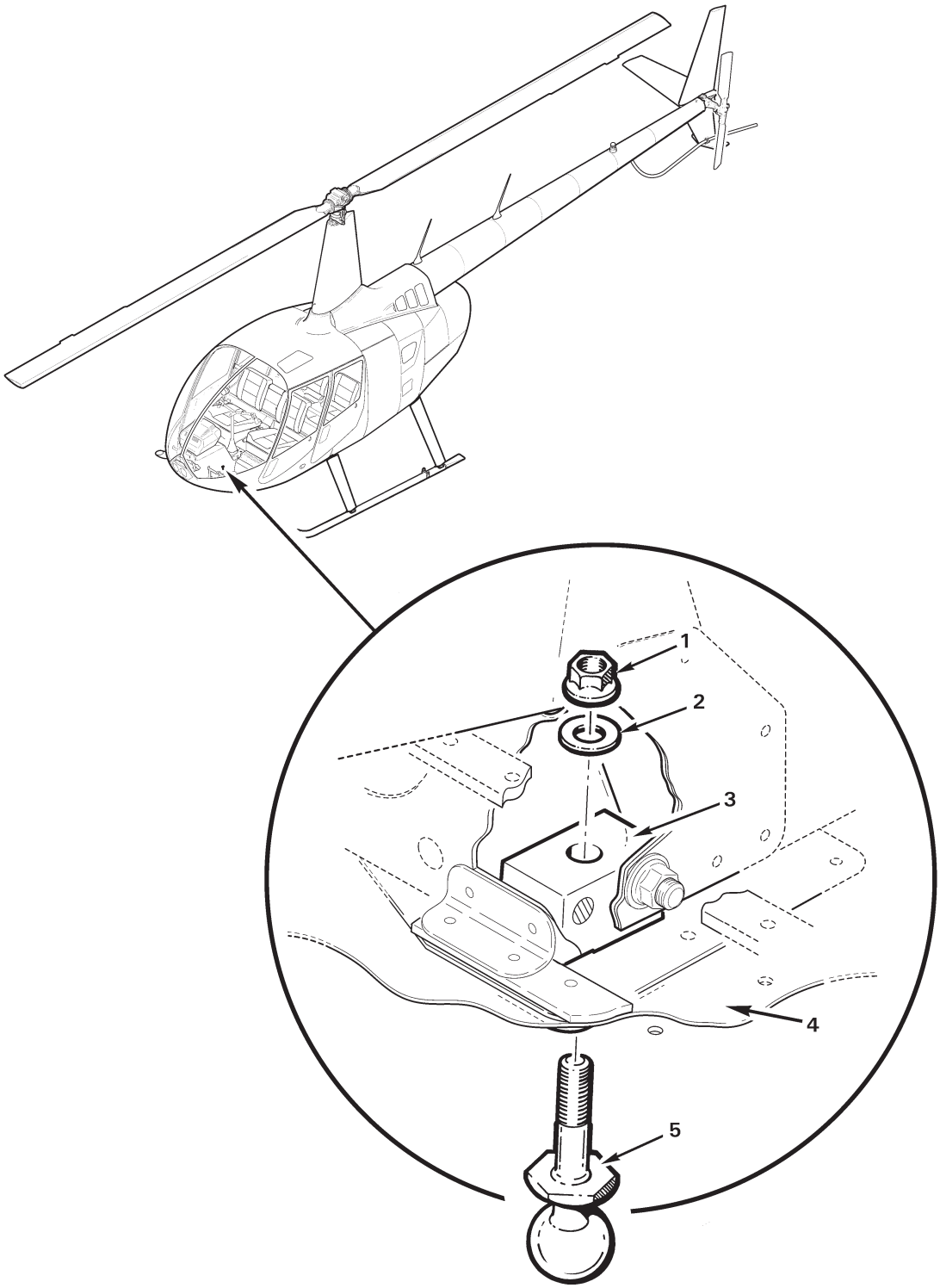

FIGURE 9-9 GROUND HANDLING BALL INSTALLATION

FIGURE AND INDEX NUMBER	PART NUMBER	DESCRIPTION	PARTS AVAIL	QTY PER ASSY
		GROUND HANDLING BALL INSTALLATION		
9-9-1	D210-5	Nut	X	1
2	NAS1149F0532P	Washer	X	1
3	C700-1	Block (Ref)		
4	F272	Panel – Belly (Ref)		
5	C700-7	Ball	X	1

NOTES

Intentionally Blank

CHAPTER 10

PARKING AND STORAGE

Figure	*Title*	*Page*
10-1	Main Rotor Blade Tie-Downs	10.0
10-3	Helicopter Cabin Covers	10.2
10-5	Hardpoint Hinge and Tie-Down Ring Installations	10.4
10-7	Main Rotor Blade Support Installation	10.6
10-9	Cover Assembly – Exhaust	10.8
10-11	Belly Tie-Down Installation	10.10

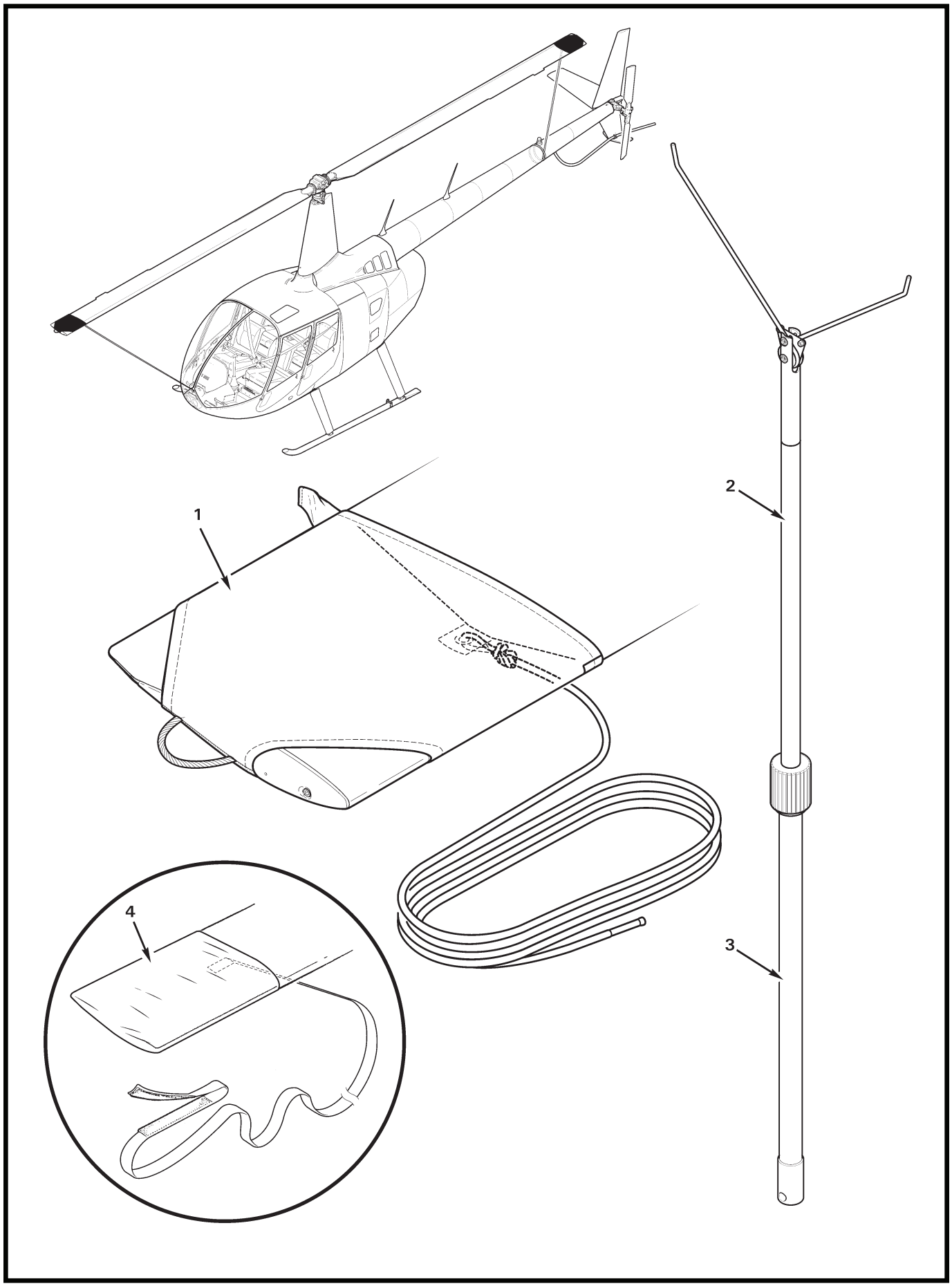
1
2
3
4

FIGURE AND INDEX NUMBER	PART NUMBER	DESCRIPTION	PARTS AVAIL	QTY PER ASSY
		MAIN ROTOR BLADE TIE-DOWNS		
10-1-1	MT290-3	Main Rotor Blade Tie-Down (Revision "J" and subsequent, nylon rope. Set of two.)	X	1
2	MT570-1	Main Rotor Blade Tie-Down Installation Tool (Incl item 3)	X	1
3	7743T61	Extension (telescopic)	X	1
4	MT290-3	Main Rotor Blade Tie-Down (Revision "I" and prior, nylon webbing with hook and loop tape; no longer available.)	O	1

NOTES

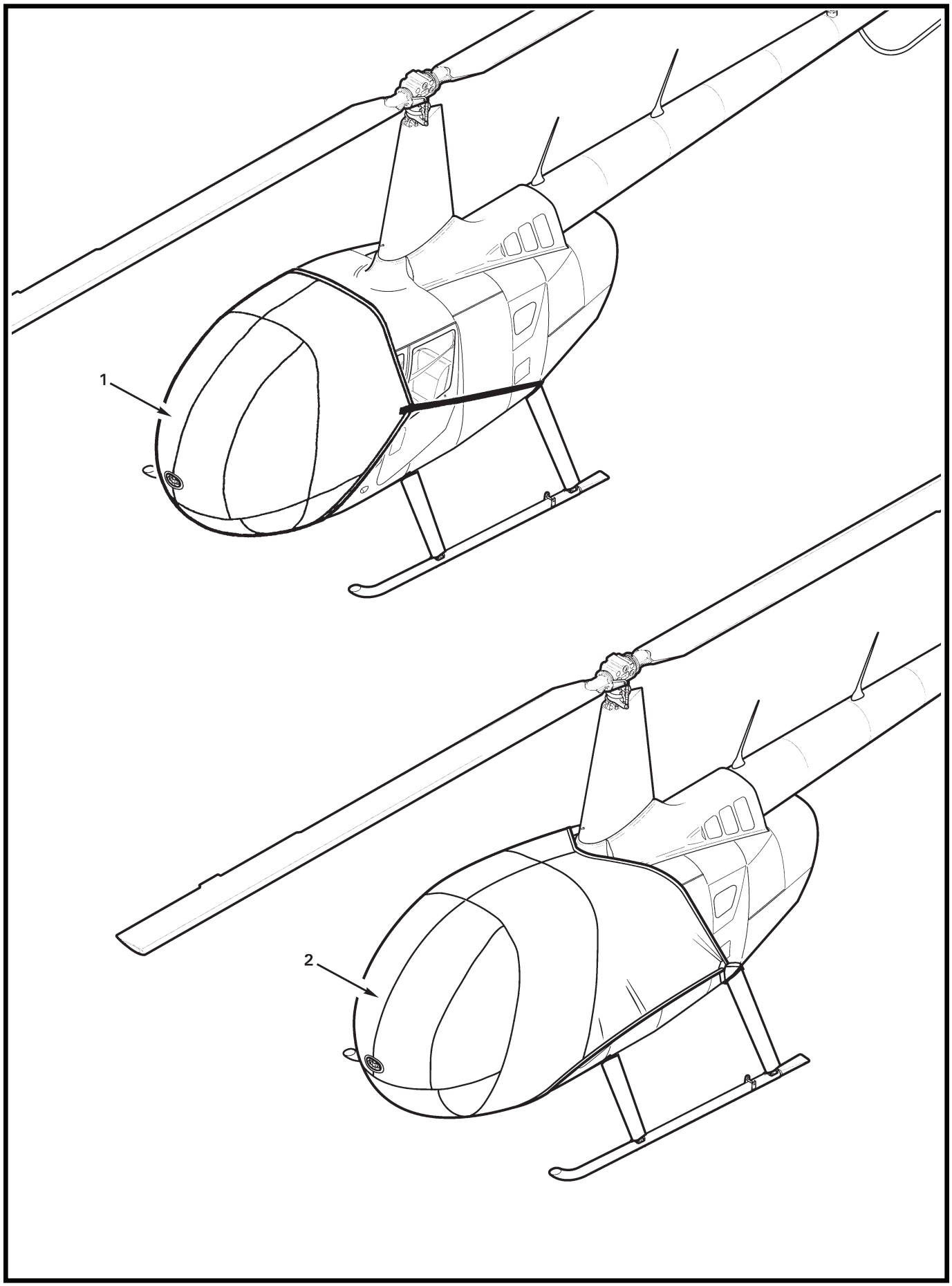
1
2

FIGURE AND INDEX NUMBER	PART NUMBER	DESCRIPTION	PARTS AVAIL	QTY PER ASSY
		HELICOPTER CABIN COVERS		
10-3-1	R66-001	Bubble Cover	X	1
2	R66-000	Full Cover (optional)	X	1

NOTES

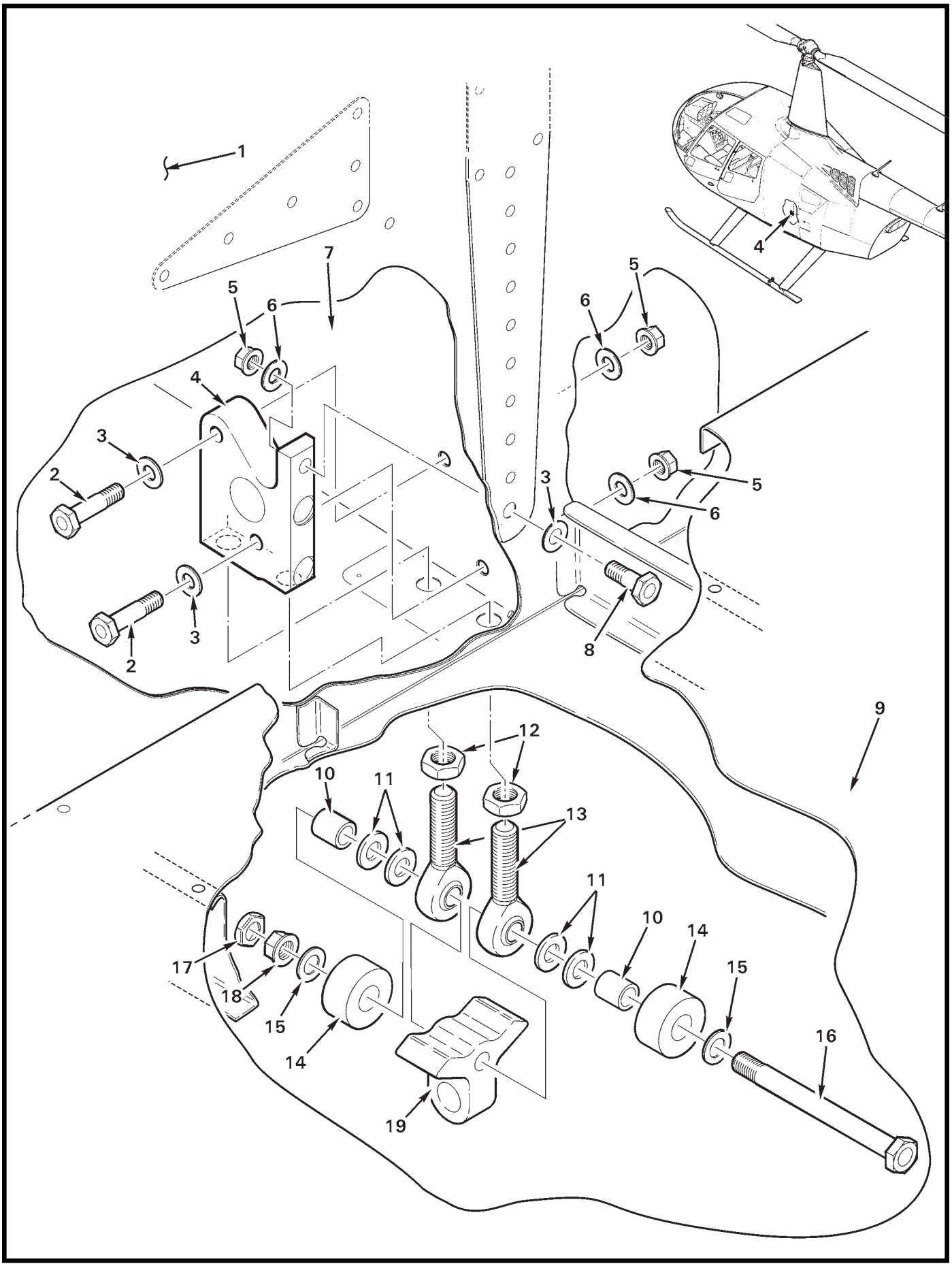
1
2
3
4
5
6
7
8
9
10
11
12
13
14
15
16
17
18
19

FIGURE AND INDEX NUMBER	PART NUMBER	DESCRIPTION	PARTS AVAIL	QTY PER ASSY
		HARDPOINT HINGE AND TIE-DOWN RING INSTALLATIONS		
10-5-1	G259-1	Panel (Bulkhead; Ref)		
2	NAS6604-12	Bolt	X	2
3	NAS1149F0432P	Washer	X	3
4	G134-1	Block	X	1
5	MS21042L4	Nut	X	3
6	NAS1149F0463P	Washer	X	3
7	F292-1	Keel Panel (LH, Ref)		
8	NAS6604-6	Bolt	X	1
9	G241-1	Floor (Ref, baggage compartment)		
10	C130-49	Spacer	X	2
11	MS20002-5	Washer	X	4
12	AN316-6R	Nut	X	2
13	D173-2	Rod End	X	2
14	D136-3	Bumper	X	2
15	NAS1149F0532P	Washer	X	2
16	NAS6605-48	Bolt	X	1
17	B330-16	Palnut	X	1
18	MS21042L5	Nut	X	1
19	D136-2	Support	X	1

NOTES

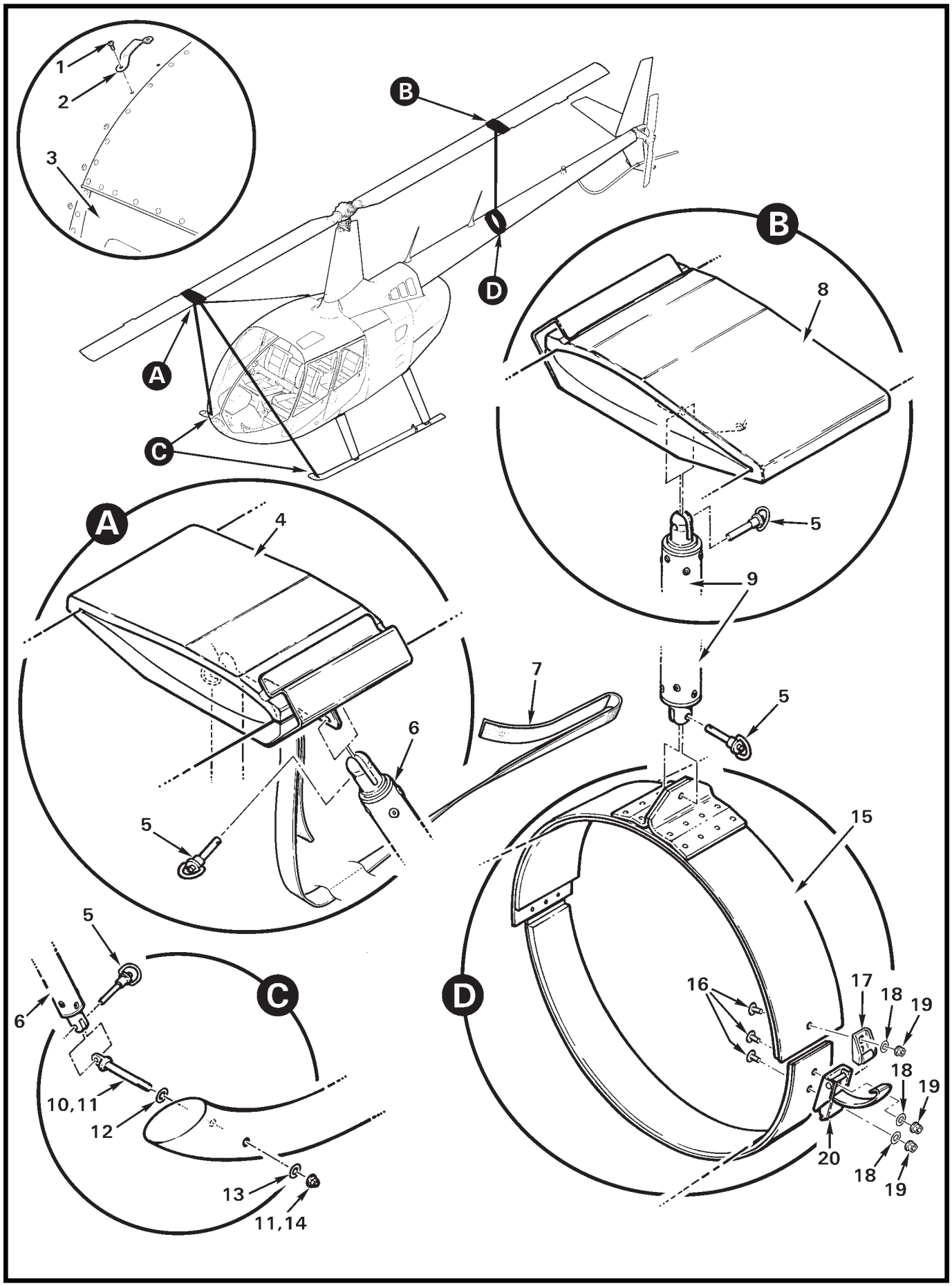

FIGURE 10-7 MAIN ROTOR BLADE SUPPORT INSTALLATION

FIGURE AND INDEX NUMBER	PART NUMBER	DESCRIPTION	PARTS AVAIL	QTY PER ASSY
		MAIN ROTOR BLADE SUPPORT INSTALLATION		
10-7-1	MS27039C0807	Screw	X	2
2	D127-3	Cleat	X	1
3	C026	Door (aft RH, Ref)		
4	MT564-1	Cradle Assembly (forward)	X	1
5	92384A034	Pin	X	6
6	MT347-8	Strut Assembly (forward)	X	2
7	MT568-3	Strap Assembly	X	1
8	MT564-2	Cradle Assembly (aft)	X	1
9	MT347-7	Strut Assembly (aft)	X	1
10	B218-2	Eye Bolt (install using item 11)	X	2
11	B270-1	Sealant	X	A/R
12	NAS1149F0532P	Washer (under head)	X	2
13	NAS1149F0563P	Washer (under nut)	X	2
14	B340-13	Nut (install using item 11)	X	2
15	MT348-7	Clamp Assembly (Incl items 16 thru 20)	X	1
16	AN525-832R6	Screw	X	3
17	—	Lug	O	1
18	NAS1149FN816P	Washer	X	3
19	MS21042L08	Nut	X	3
20	97-50-215-12	Latch (Incl item 17)	X	1

NOTES

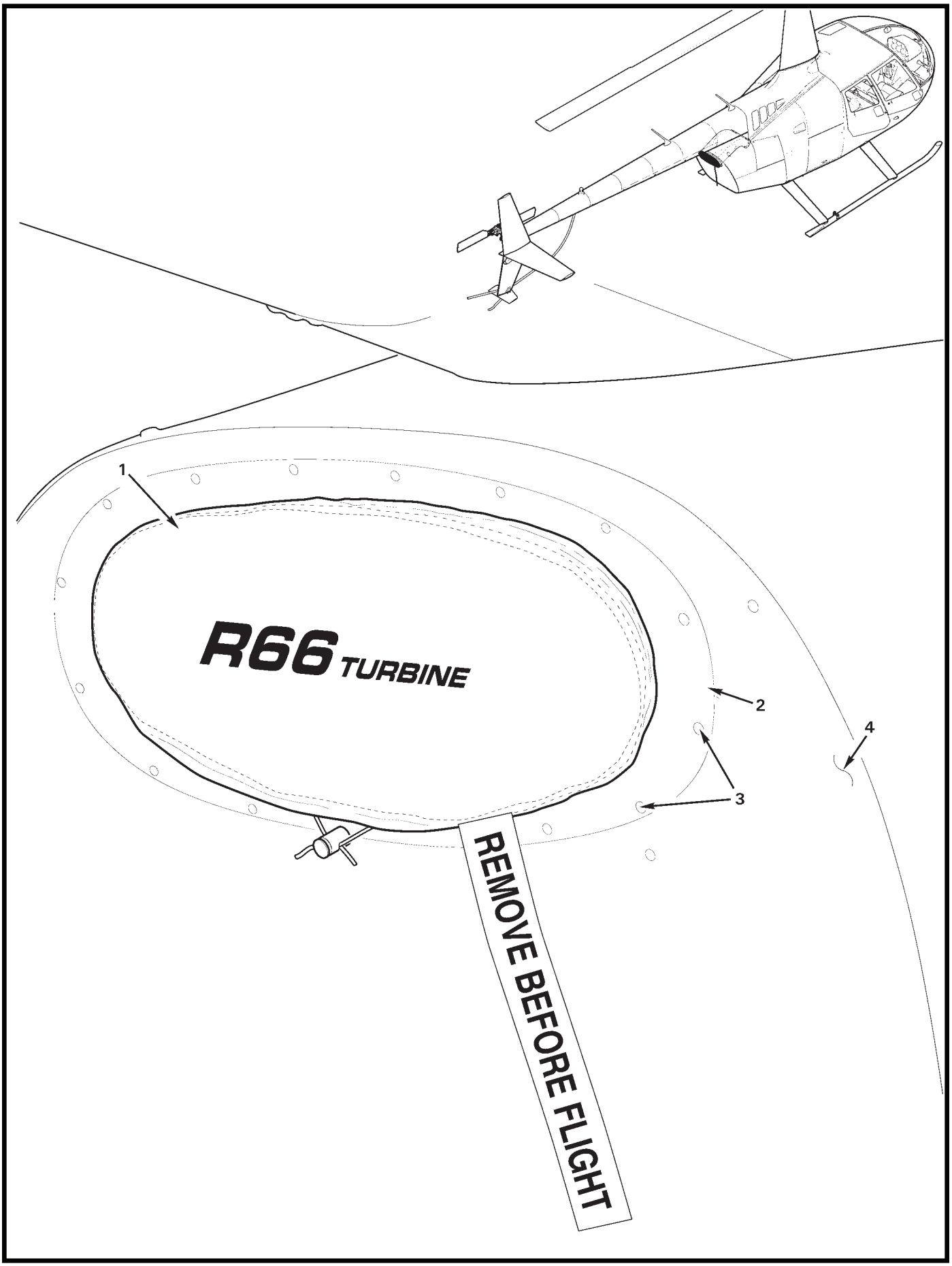
1
R66 TURBINE
2
3
4
REMOVE BEFORE FLIGHT

FIGURE AND INDEX NUMBER	PART NUMBER	DESCRIPTION	PARTS AVAIL	QTY PER ASSY
		COVER ASSEMBLY – EXHAUST		
10-9-1	MT293-1	Cover Assembly	X	1
2	G039-1	Ring (Ref)		
3	MS20470AD3	Rivet (Ref)		
4	G040	Aft Engine Cowling (Ref)		

NOTES

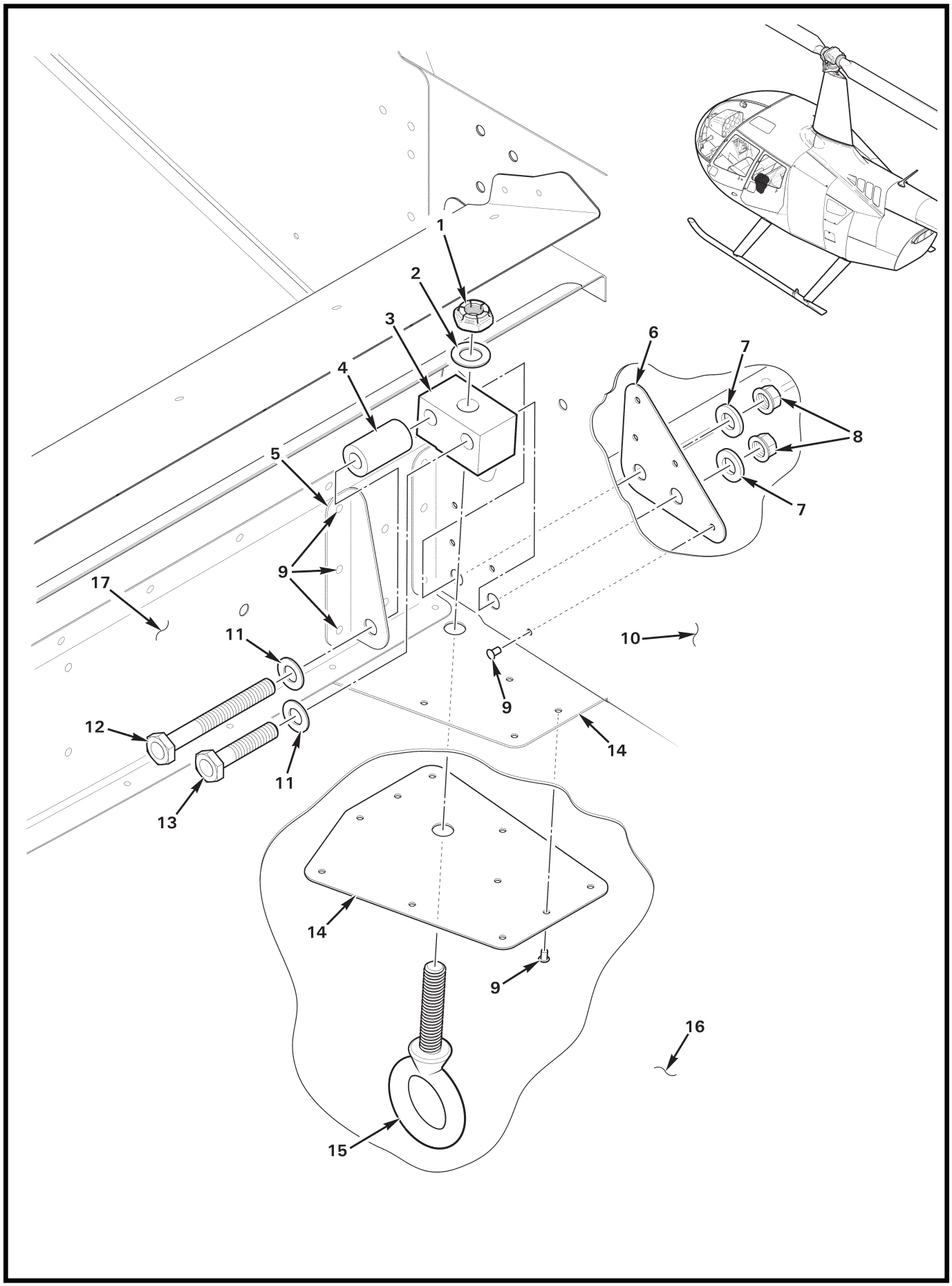
1
2
3
4
5
6
7
8
7
9
17
11
10
9
12
14
11
13
14
9
16
15

FIGURE AND INDEX NUMBER	PART NUMBER	DESCRIPTION	PARTS AVAIL	QTY PER ASSY
		BELLY TIE-DOWN INSTALLATION		
10-11-1	21FKF-518	Nut	X	1
2	NAS1149F0532P	Washer	X	1
3	C700-1	Block	X	1
4	A130-43	Spacer	X	1
5	G124-2	Angle	X	1
6	G124-3	Doubler (Ref)		
7	NAS1149F0463P	Washer	X	2
8	D210-4	Nut	X	2
9	MS20470AD4	Rivet	X	17
10	F293-1	Keel Panel (Ref)		
11	NAS1149F0432P	Washer	X	2
12	NAS6604-28	Bolt	X	1
13	NAS6604-13	Bolt	X	1
14	F700-4	Doubler (sandwich chin; seal all around both doublers using B270-1 sealant after installation)	X	2
15	33045T28	Eyebolt	X	1
16	F272-1	Chin (Ref)		
17	G230-1	Bulkhead (Ref)		

NOTES

Intentionally Blank

CHAPTER 11

PLACARDS AND MARKINGS

Figure	*Title*	*Page*
11-1	Placards and Markings	11.0
11-5	Placards and Markings	11.4
11-7	Placards and Markings (Brazilian)	11.6
11-11	Placards and Markings (Brazilian)	11.10
11-13	Placards and Markings (Chinese)	11.12
11-15	Placards and Markings (Hebrew)	11.14
11-17	Placards and Markings (Hebrew)	11.16
11-19	Placards and Markings (Japanese)	11.18
11-21	Placards and Markings (Russian)	11.20
11-23	Placards and Markings (Russian)	11.22

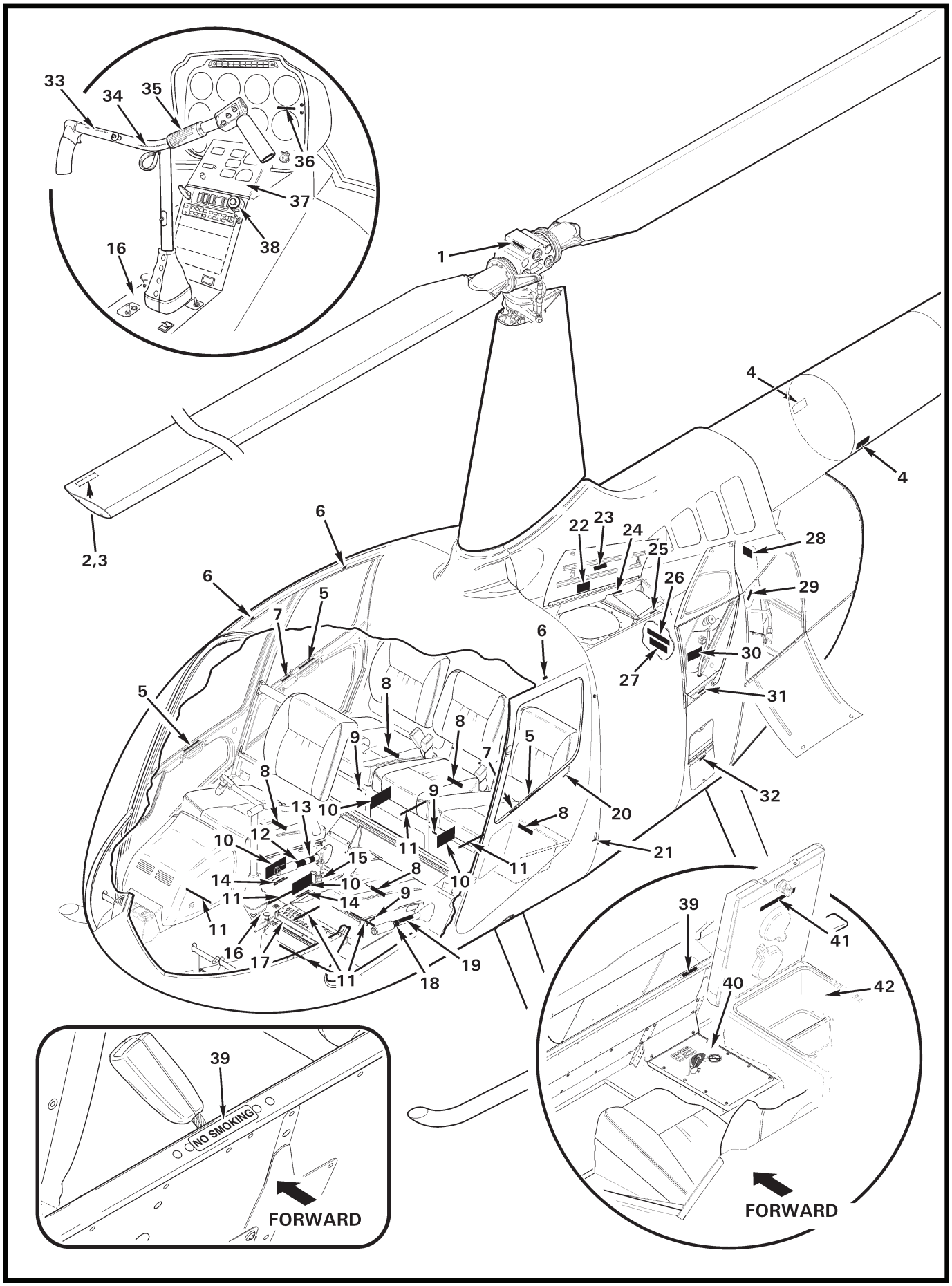
33
34
35
36
37
38
16
1
4
4
2,3
6
6
5
7
5
22
23
24
25
26
28
29
30
27
31
6
8
8
9
7
5
8
9
13
10
20
32
8
12
10
11
21
15
14
10
8
11
14
9
11
16
17
11
18
19
10
11
39
41
40
42
39
NO SMOKING
FORWARD
FORWARD

FIGURE AND INDEX NUMBER	PART NUMBER	DESCRIPTION	PARTS AVAIL	QTY PER ASSY
		PLACARDS AND MARKINGS*		
11-1-1	A654-18	Decal – "LEVEL HERE"	X	1
2	A654-25	Decal – "NEVER PULL DOWN / PUSH UP OPPOSITE BLADE" (seal edges using item 3)	X	2
3	B270-25	Clear Coat (1/2 oz. bottle)	X	A/R
4	A654-94	Decal – "DANGER HOT EXHAUST"	X	2
5	F654-21	Decal – "TO CLOSE: SLIDE HANDLE AFT AND DOWN..."	X	4
6	F654-22	Decal – "EXIT"	X	4
7	F654-20	Decal – "PUSH TO LOCK / DO NOT LOCK IN FLIGHT"	X	2
8	F654-19	Decal – "ENERGY-ABSORBING SEAT / DO NOT MODIFY"	X	5
9	C654-17	Decal – "INTERCOM"	X	3
10	F654-10	Decal – "CAUTION"	X	4
11	F654-17	Decal – "MAX FILL LINE"	X	7
12	F654-1	Decal – "THROTTLE OPEN"	X	1
13	A654-7	Decal – "FRICTION INCREASE"	X	1
14	F445-1	Marking – "NO STOWAGE KEEP AREA CLEAR" (Ref)		
	F445-3	Marking – "NO STOWAGE KEEP AREA CLEAR" (float ships; not shown, Ref)		
15	A654-45	Decal – "FUEL CONTROL ..."	X	1
16	F444-1	Marking – "NO SMOKING"	X	1
17	F490-3	Panel Assembly – Circuit Breaker	X	1
	F490-1	Panel Assembly – Circuit Breaker (earlier R66s)	X	1
18	A654-6	Decal – "THROTTLE OPEN"	X	1
19	A654-21	Decal – "NO STOWAGE / KEEP AREA CLEAR"	X	1
20	A654-12	Decal – "OPEN" (black lettering)	X	2
	A654-10	Decal – "OPEN" (white lettering)	X	2
21	C654-7	Decal – "STATIC PORT" (black lettering)	X	2
	C654-8	Decal – "STATIC PORT" (white lettering)	X	2
22	F654-5	Decal – "FUEL GRADE"	X	1
23	G682-20	Decal – "STOW MT106-2 FUEL DIPSTICK HERE..."	X	1
24	G682-32	Decal – "GROUND HERE BEFORE..."	X	1
25	F654-15	Decal – "STEP HERE/HAND HOLD"	X	1
26	G654-1	Decal – "ENGINE COMPRESSOR RINSE CONNECTION"	X	1
27	F654-12	Decal – "HYDRAULIC FLUID AND GEARBOX OIL"	X	1
28	23052363**	Decal – "WARNING: FAILURE TO PROPERLY INSTALL..."	X	1
29	A654-38	Decal – "PUSH TO OPEN"	X	1

NOTES * Decal and Marking text in quotes. Markings are silk screened on component.

** Rolls Royce part number.

Continues

FIGURE AND INDEX NUMBER	PART NUMBER	DESCRIPTION	PARTS AVAIL	QTY PER ASSY
		PLACARDS AND MARKINGS* (Cont'd)		
11-1-30	F654-3	Decal – "ENGINE OIL"	X	1
31	F654-11	Decal – "STEP HERE"	X	1
32	F654-16	Decal – "STEP HERE LEFT FOOT"	X	1
33	A321-21	Marking – "SOLO FROM RIGHT SEAT ONLY" (Ref; Weldment, Pistol Grip; see Figure 67-11)		
	A321-19	Marking – "SOLO FROM RIGHT SEAT ONLY" (Ref; Weldment, Pistol Grip; earlier R66s)		
34	A756-25	Marking – "LOW-G PUSHOVERS PROHIBITED" (Ref; Weldment, Pistol Grip; see Figure 67-11)		
	A756-24	Marking – "LOW-G PUSHOVERS PROHIBITED" (Ref; Weldment, Pistol Grip; earlier R66s, see Figure 67-11)		
35	F654-4	Decal – "NEVER EXCEED SPEED"	X	1
	F654-28	Decal – "NEVER EXCEED SPEED" (float ships / police version; not shown)	X	1
36	G654-5	Decal – "TRANSIENT OPERATION ONLY 75-88% N2..."	X	A/R
37	B051-20	Face Assembly – "R66 TURBINE" (Phaostron)	X	1
38	A654-45	Decal – "FUEL CONTROL GUARD INSTALL BEFORE TAKEOFF"	X	1
39	A654-17	Decal – "NO SMOKING"	X	1
40	F463-1	Marking – "DANGER TAIL ROTOR AND HOT EXHAUST"	X	1
41	F654-27	Decal – "MAXIMUM COMPARTMENT CAPACITY: 10 LB (4.5 KG)"	X	1
42	G749-2	Console Assembly (Ref; includes item 41)		

NOTES * Decal and Marking text in quotes. Markings are silk screened on component.

Intentionally Blank

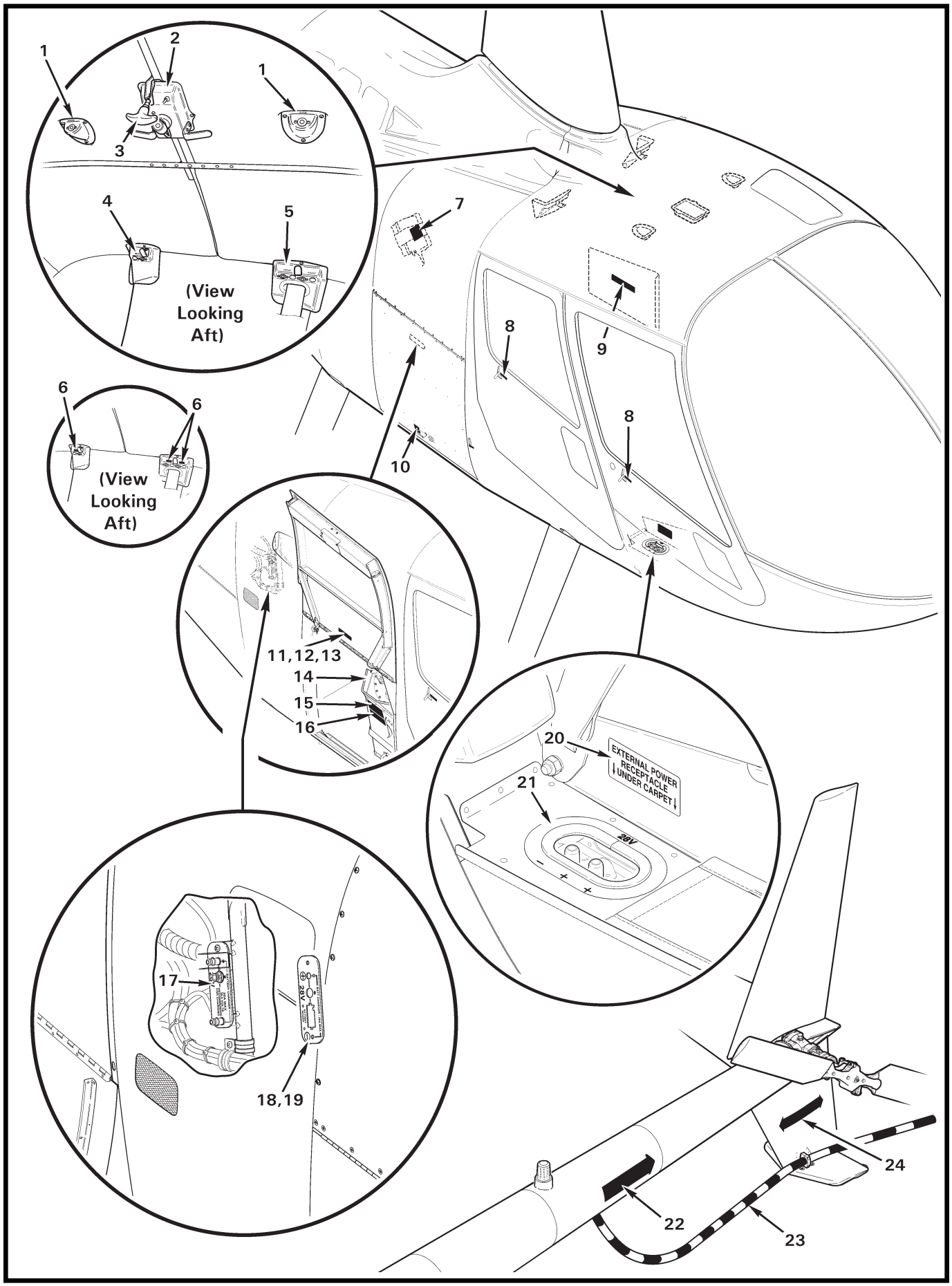
1
2
1
3
4
5
(View Looking Aft)
7
8
9
8
10
6
6
(View Looking Aft)
11,12,13
14
15
16
20
EXTERNAL POWER RECEPTACLE UNDER CARPET
21
28V
17
28V
18,19
24
22
23

FIGURE AND INDEX NUMBER	PART NUMBER	DESCRIPTION	PARTS AVAIL	QTY PER ASSY
		PLACARDS AND MARKINGS*		
11-5-1	C710-1	Marking – “HEADSET" (Cover; Ref)		
2	C712-2	Marking – “MAP LIGHT HIGH/LOW/OFF, CABIN LIGHT ON/OFF” (Ref)		
3	D119-1	Marking – “BRAKE” (knob)	X	1
4	F436-6	Marking – “HEADSET” (RH, cover assembly)	X	1
5	F436-5	Marking – “HEADSET” (LH, cover assembly)	X	1
6	A654-16	Decal – “HEADSET” (earlier R66s)	X	3
7	F654-25	Decal (dongle and elt programming)	X	1
8	A654-11	Decal – “OPEN” (black lettering)	X	2
	A654-9	Decal – “OPEN” (white lettering)	X	2
9	F654-24	Decal – “BATTERY LOCATED BEHIND THIS PANEL”	X	1
10	F654-8	Decal – “LATCH” (black lettering)	X	1
	F654-9	Decal – “LATCH” (white lettering)	X	1
11	F654-7	Decal – “CAUTION...”	X	1
12	G682-40	Decal – “CAUTION...” (load maximums)	X	1
	G682-30	Decal – "CAUTION..." (aux fuel tank installed; earlier R66s)	X	1
13	F654-26	Decal – “CAUTION...” (police version)	X	1
14	G010-2	AUX Tank Assembly (Ref)		
15	F654-5	Decal – “JET FUEL ONLY...”	X	1
16	G682-37	Decal – “43.5 US GAL (165L) CAUTION...” (weight limitations)	X	1
	G682-41	Decal – "23.2 US GAL (88L) CAUTION..." (weight limitations)	X	1
17	G598-7	Marking – "28V / BATT CHARGER – 20A MAX" (faceplate)	X	1
18	G598-5	Marking – “28V / BATT CHARGER – 20A MAX” (faceplate, for spares)	X	1
	G598-3	Marking – “28V / BATT CHARGER – 10A MAX” (faceplate, for spares)	X	1
19	G598-2	Marking – “28V / BATT CHARGE” (faceplate; supersedes G598-1)	X	A/R
	G598-1	Marking – “28V / BATT CHARGE” (faceplate, earlier R66s)	O	1
20	G682-2	Decal – "EXTERNAL POWER RECEPTACLE UNDER CARPET" (white lettering)	X	1
21	G682-1	Decal – +"28V" (red lettering)	X	1
22	A654-3	Decal – “DANGER”	X	2
23	D079-1	Tail Rotor Guard (Ref, see Figure 53-25)		
24	C654-2	Decal – “DANGER”	X	2

NOTES * Decal and Marking text in quotes. Markings are silk screened on component. See also Figure 11-1.

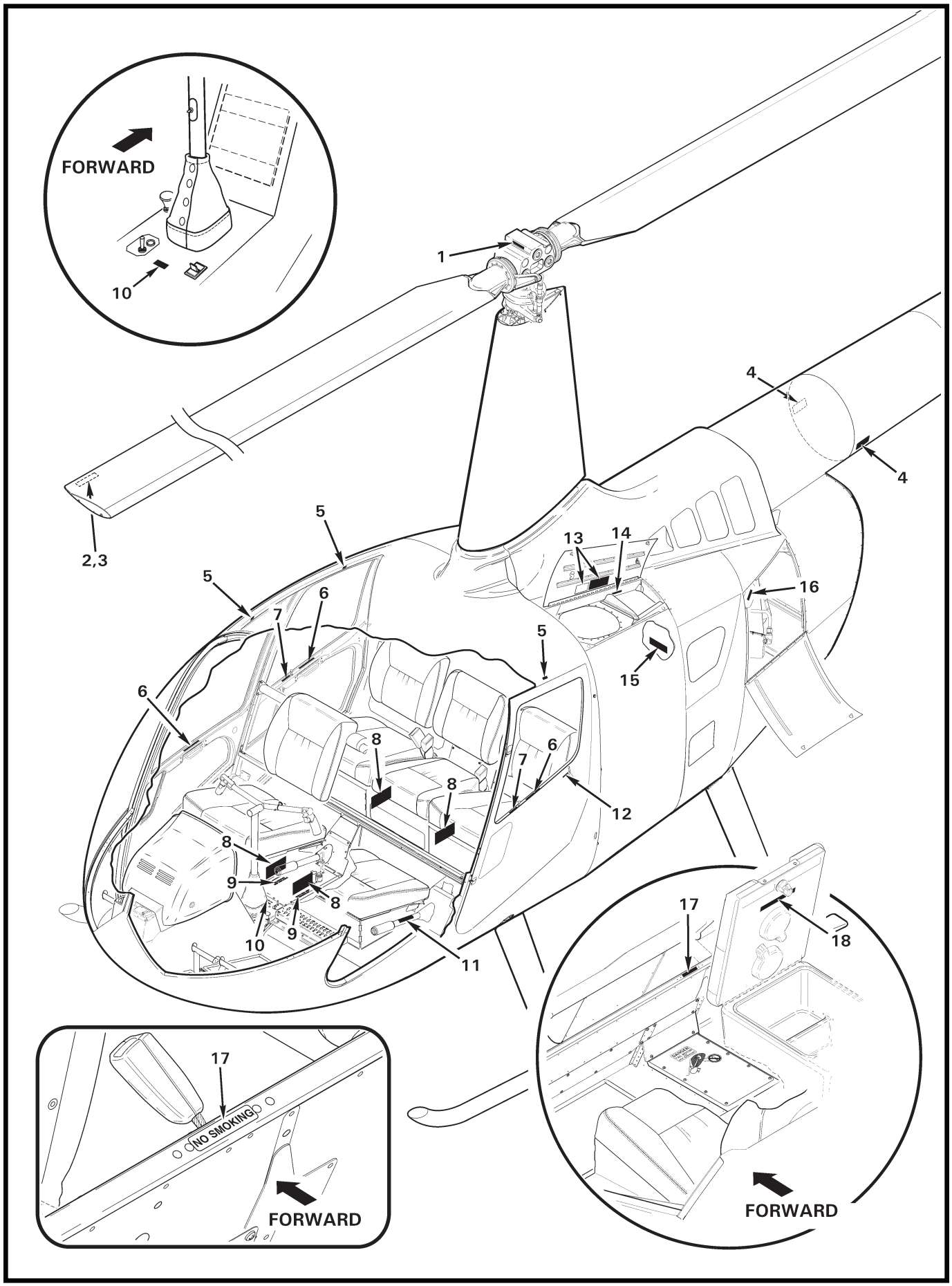
FORWARD
10
1
4
4
2,3
5
5
6
7
6
5
13
14
16
15
8
8
6
7
12
8
9
8
9
10
11
17
18
17
NO SMOKING
FORWARD
FORWARD

FIGURE AND INDEX NUMBER	PART NUMBER	DESCRIPTION	PARTS AVAIL	QTY PER ASSY
		PLACARDS AND MARKINGS* (BRAZILIAN)		
11-7-1	A654-18	Decal – "LEVEL HERE" (Ref)		
	B841-19	Brazilian Decal (A654-18 equivalent)	X	1
2	A654-25	Decal – "NEVER PULL DOWN / PUSH UP OPPOSITE BLADE" (Ref)		
	B841-23	Brazilian Decal (A654-25 equivalent; seal edges using item 3)	X	2
3	B270-25	Clear Coat (1/2 oz. bottle)	X	A/R
4	A654-94	Decal – "DANGER HOT EXHAUST" (Ref)		
	B841-30	Brazilian Decal (A654-94 equivalent)	X	2
5	F654-22	Decal – "EXIT" (Ref)		
6	F654-21	Decal – "TO CLOSE: SLIDE HANDLE AFT AND DOWN..." (Ref)		
	B841-62	Brazilian Decal (F654-21 equivalent)	X	4
	B841-63	Brazilian Decal (F654-22 equivalent)	X	4
7	F654-20	Decal – "PUSH TO LOCK / DO NOT LOCK IN FLIGHT" (Ref)		
	B841-61	Brazilian Decal (F654-20 equivalent)	X	2
8	F654-10	Decal – "CAUTION" (Ref)		
	B841-56	Brazilian Decal (F654-10 equivalent)	X	4
9	F445-1	Marking – "NO STOWAGE KEEP AREA CLEAR" (Ref)		
	F445-3	Marking – "NO STOWAGE KEEP AREA CLEAR" (float ships; Ref)		
	B841-33	Brazilian Decal (covers marking; F445 equivalent)	X	2
10	F444-1	Marking – "NO SMOKING" (Ref)		
	B841-18	Brazilian Decal (covers marking; F444 equivalent)	X	4
11	A654-21	Decal – "NO STOWAGE / KEEP AREA CLEAR" (Ref)		
	B841-21	Brazilian Decal (A654-21 equivalent)	X	2
12	A654-12	Decal – "OPEN" (black lettering; Ref)		
	B841-17	Brazilian Decal (A654-12 equivalent)	X	A/R
	A654-10	Decal – "OPEN" (white lettering; Ref)		
	B841-15	Brazilian Decal (A654-10 equivalent)	X	A/R
13	F654-5	Decal – "FUEL GRADE" (Ref)		
	B841-51	Brazilian Decal (F654-5 equivalent)	X	1
14	G682-32	Decal – "GROUND HERE BEFORE..." (Ref)		
	B841-67	Brazilian Decal (G682-32 equivalent)	X	1
15	F654-12	Decal – "HYDRAULIC FLUID AND GEARBOX OIL" (Ref)		
	B841-57	Brazilian Decal (F654-12 equivalent)	X	1

NOTES * Decal and Marking text in quotes. Markings are silk screened on component. See also Figure 11-1.

Continues

FIGURE AND INDEX NUMBER	PART NUMBER	DESCRIPTION	PARTS AVAIL	QTY PER ASSY
		PLACARDS AND MARKINGS* (BRAZILIAN Cont'd)		
11-7-16	A654-38	Decal – "PUSH TO OPEN" (Ref)		
	B841-25	Brazilian Decal (A654-38 equivalent)	X	1
17	A654-17	Decal – “NO SMOKING” (Ref)		
	B841-18	Brazilian Decal (A654-17 equivalent)	X	1
18	F654-27	Decal – “MAXIMUM COMPARTMENT CAPACITY: 10 LB (4.5 KG)” (Ref)		
	B841-65	Brazilian Decal (F654-27 equivalent)	X	A/R

NOTES * Decal and Marking text in quotes. Markings are silk screened on component. See also Figure 11-1.

Intentionally Blank

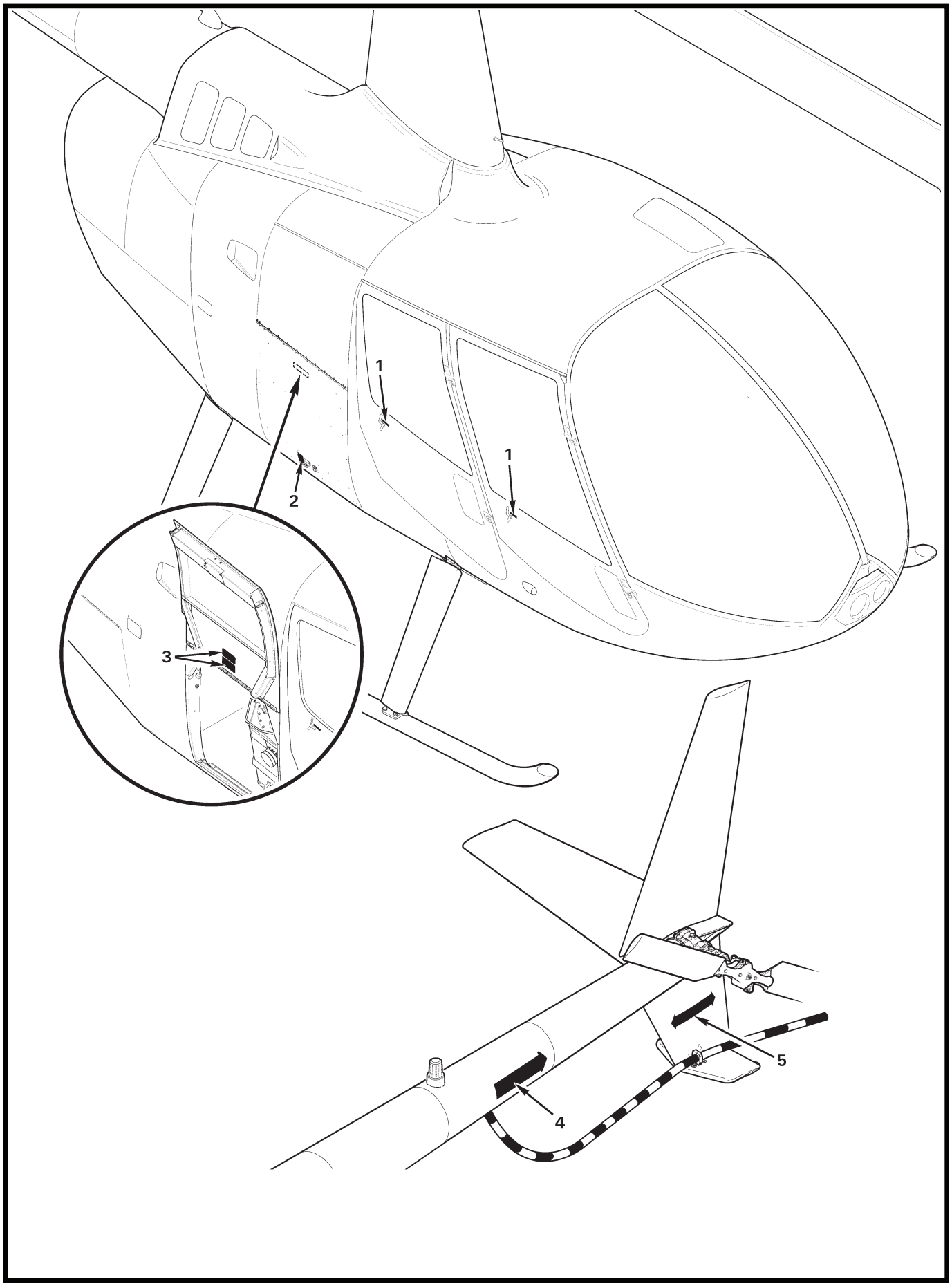
1
1
2
3
4
5

FIGURE AND INDEX NUMBER	PART NUMBER	DESCRIPTION	PARTS AVAIL	QTY PER ASSY
		PLACARDS AND MARKINGS* (BRAZILIAN)		
11-11-1	A654-11	Decal – "OPEN" (black lettering; Ref)		
	B841-16	Brazilian Decal (A654-11 equivalent)	X	A/R
	A654-9	Decal – "OPEN" (white lettering; Ref)		
	B841-14	Brazilian Decal (A654-9 equivalent)	X	A/R
2	F654-8	Decal – "LATCH" (black lettering; Ref)		
	B841-54	Brazilian Decal (F654-8 equivalent)	X	A/R
	F654-9	Decal – "LATCH" (white lettering; Ref)		
	B841-55	Brazilian Decal (F654-9 equivalent)	X	A/R
3	F654-7**	Decal – "CAUTION..." (load maximums; Ref)		
	B841-53	Brazilian Decal (F654-7 equivalent)	X	1
	G682-40	Decal – "CAUTION..." (load maximums; aux fuel tank installed, Ref)		
	B841-72	Brazilian Decal (G682-40 equivalent)	X	A/R
	G682-30	Decal – "CAUTION..." (load maximums; aux fuel tank installed, Ref)		
	B841-66	Brazilian Decal (G682-30 equivalent, earlier R66s)	X	A/R
	F654-26	Decal – "CAUTION..." (police version; Ref)		
	B841-64	Brazilian Decal (F654-26 equivalent)	X	A/R
4	A654-3	Decal – "DANGER" (Ref)		
	B841-12	Brazilian Decal (trim arrow head fwd end; A654-3 equivalent)	X	2
5	C654-2	Decal – "DANGER" (Ref)		
	B841-39	Brazilian Decal (C654-2 equivalent)	X	2

NOTES * Decal and Marking text in quotes. Markings are silk screened on component. See also Figure 11-1.

** See also Figure 11-5.

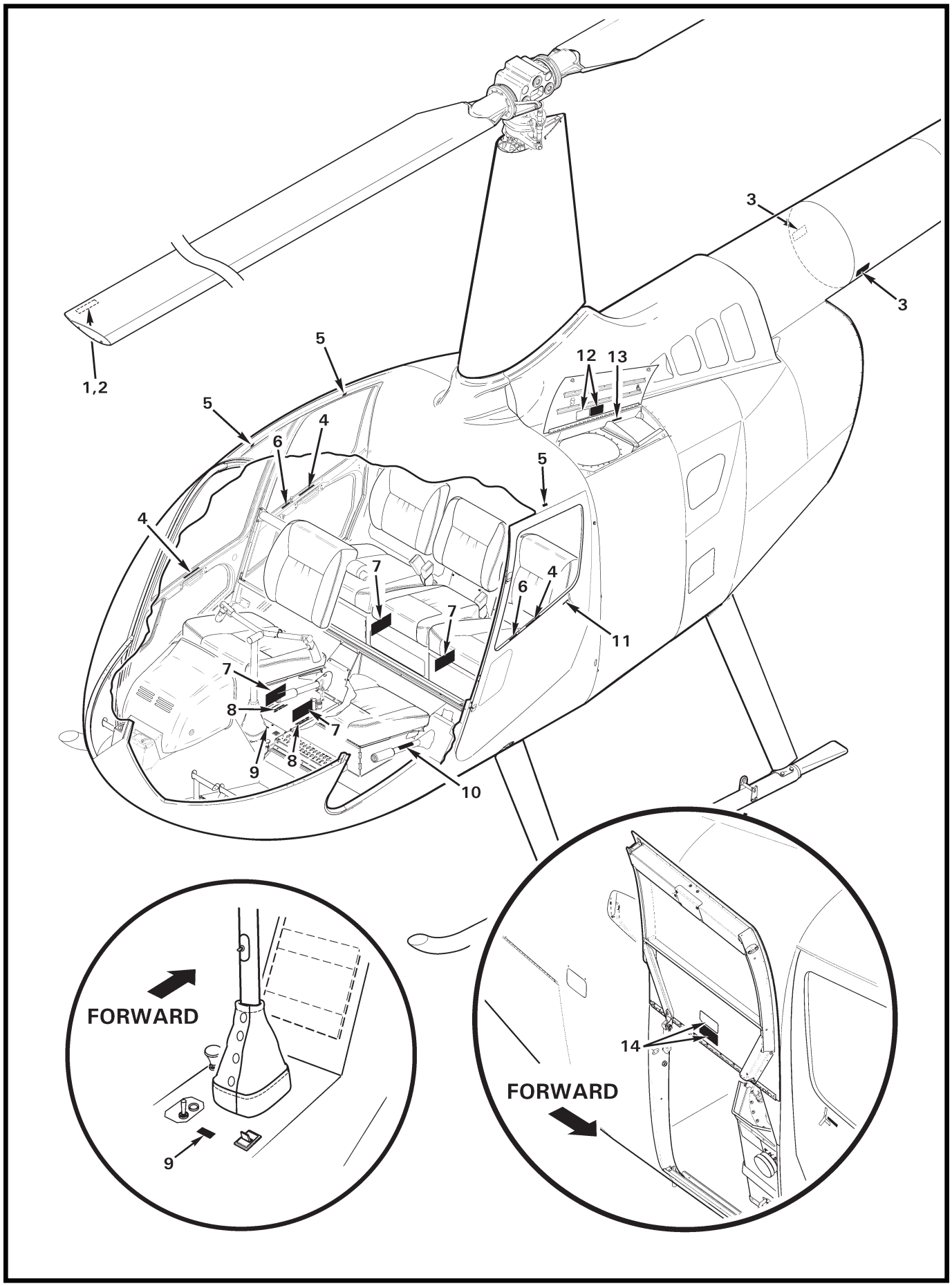
1,2
3
3
4
4
5
5
5
6
6
7
7
7
7
8
8
9
9
10
11
12
13
14
FORWARD
FORWARD

FIGURE AND INDEX NUMBER	PART NUMBER	DESCRIPTION	PARTS AVAIL	QTY PER ASSY
		PLACARDS AND MARKINGS* (CHINESE)		
11-13-1	A654-25	Decal – "NEVER PULL DOWN / PUSH UP OPPOSITE BLADE" (Ref)		
	B842-18	Chinese Decal (place below or adjacent to A654-25 equivalent; seal edges using item 2)	X	2
2	B270-25	Cleat Coat (1/2 oz. bottle)	X	A/R
3	A654-94	Decal – "DANGER HOT EXHAUST" (Ref)		
	B842-20	Chinese Decal (A654-94 equivalent)	X	2
4	F654-21	Decal – "TO CLOSE: SLIDE HANDLE AFT AND DOWN..." (Ref)		
	B842-32	Chinese Decal (F654-21 equivalent)	X	4
5	F654-22	Decal – "EXIT" (Ref)		
	B842-33	Chinese Decal (F654-22 equivalent)	X	4
6	F654-20	Decal – "PUSH TO LOCK / DO NOT LOCK IN FLIGHT" (Ref)		
	B842-31	Chinese Decal (F654-20 equivalent)	X	2
7	F654-10	Decal – "CAUTION" (Ref)		
	B842-30	Chinese Decal (F654-10 equivalent)	X	4
8	F445-1	Marking – "NO STOWAGE KEEP AREA CLEAR" (Ref)		
	F445-3	Marking – "NO STOWAGE KEEP AREA CLEAR" (float ships; Ref)		
	B842-23	Chinese Decal (covers marking; F445 equivalent)	X	2
9	F444-1	Marking – "NO SMOKING" (Ref)		
	B842-16	Chinese Decal (covers marking; F444 equivalent)	X	2
10	A654-21	Decal – "NO STOWAGE / KEEP AREA CLEAR" (Ref)		
	B842-17	Chinese Decal (A654-21 equivalent)	X	2
11	A654-12	Decal – "OPEN" (black lettering; Ref)		
	B842-15	Chinese Decal (A654-12 equivalent)	X	A/R
	A654-10	Decal – "OPEN" (white lettering; Ref)		
	B842-13	Chinese Decal (A654-10 equivalent)	X	2
12	F654-5**	Decal – "FUEL GRADE" (Ref)		
	B842-25	Chinese Decal (F654-5 equivalent)	X	1
13	G682-32	Decal – "GROUND HERE BEFORE..." (Ref)		
	B842-26	Chinese Decal (G682-32 equivalent)	X	1
14	F654-7**	Decal – "CAUTION..." (load maximums; Ref)		
	B842-27	Chinese Decal (below or adjacent to F654-7 equivalent)	X	1

NOTES * Decal and Marking text in quotes. Markings are silk screened on component. See also Figure 11-1.
** See also Figure 11-5.

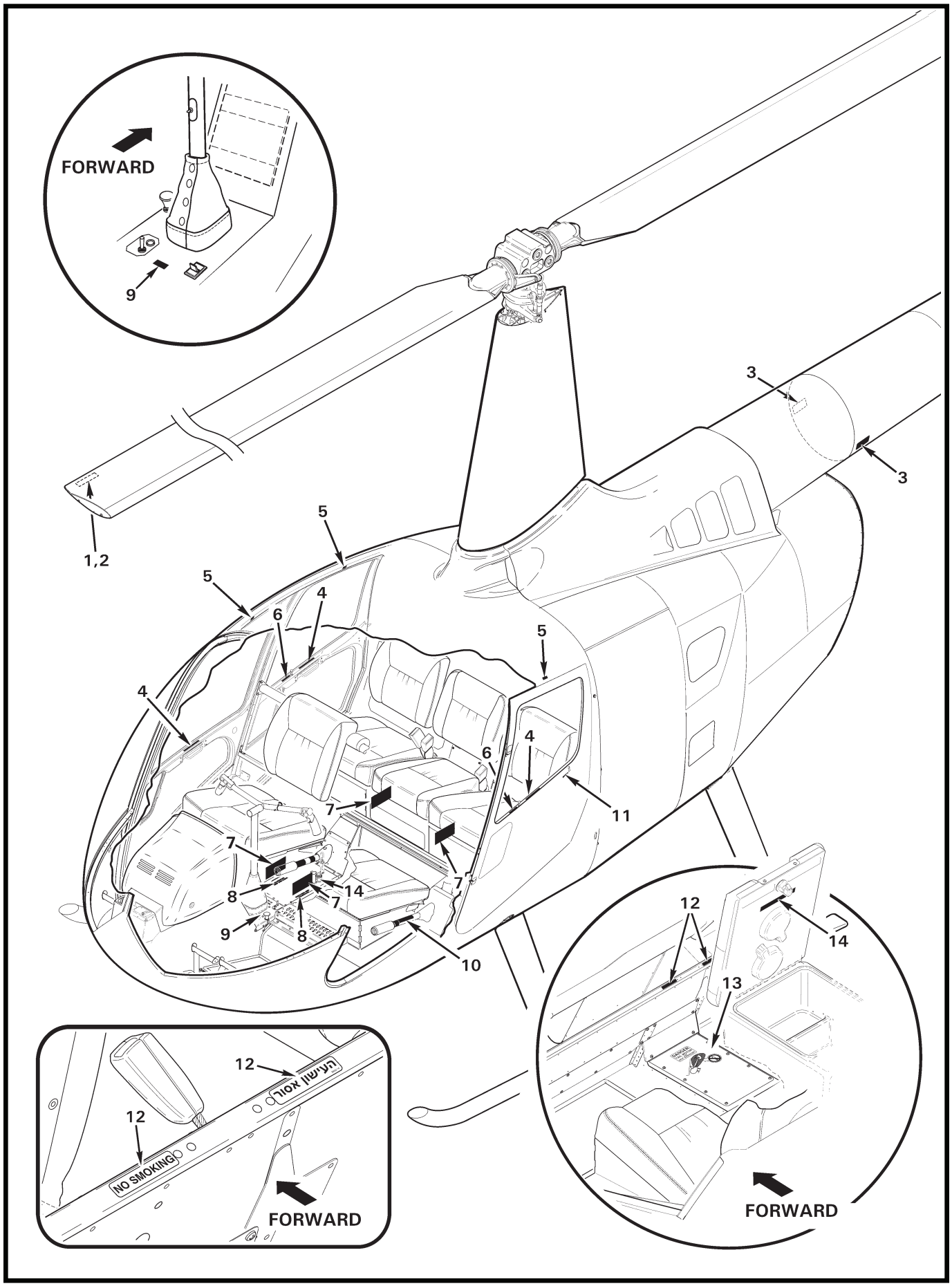
FORWARD
9
3
3
1,2
5
5
4
6
5
4
6
4
11
7
7
7
8
14
7
9
8
10
12
14
13
FORWARD
12
12
NO SMOKING
FORWARD

FIGURE AND INDEX NUMBER	PART NUMBER	DESCRIPTION	PARTS AVAIL	QTY PER ASSY
		PLACARDS AND MARKINGS* (HEBREW)		
11-15-1	A654-25	Decal – "NEVER PULL DOWN / PUSH UP OPPOSITE BLADE" (Ref)		
	B850-18	Hebrew Decal (below or adjacent to A654-25 equivalent; seal edges using item 2)	X	2
2	B270-25	Clear Coat (1/2 oz. bottle)	X	A/R
3	A654-94	Decal – "DANGER HOT EXHAUST" (Ref)		
	B850-20	Hebrew Decal (A654-94 equivalent)	X	2
4	F654-21	Decal – "TO CLOSE: SLIDE HANDLE AFT AND DOWN..." (Ref)		
	B850-32	Hebrew Decal (F654-21 equivalent)	X	4
5	F654-22	Decal – "EXIT" (Ref)		
	B850-33	Hebrew Decal (adjacent to F654-22 equivalent)	X	4
6	F654-20	Decal – "PUSH TO LOCK / DO NOT LOCK IN FLIGHT" (Ref)		
	B850-31	Hebrew Decal (F654-20 equivalent)	X	2
7	F654-10	Decal – "CAUTION" (Ref)		
	B850-29	Hebrew Decal (below or adjacent to F654-10 equivalent) . . .	X	4
8	F445-1	Marking – "NO STOWAGE KEEP AREA CLEAR" (Ref)		
	F445-3	Marking – "NO STOWAGE KEEP AREA CLEAR" (float ships; Ref)		
	B850-24	Hebrew Decal (adjacent to F445 equivalent)	X	3
9	F444-1	Marking – "NO SMOKING" (Ref)		
	B850-16	Hebrew Decal (below marking; F444-1 equivalent)	X	2
10	A654-21	Decal – "NO STOWAGE / KEEP AREA CLEAR" (Ref)		
	B850-17	Hebrew Decal (A654-21 equivalent)	X	A/R
11	A654-12	Decal – "OPEN" (black lettering; Ref)		
	B850-15	Hebrew Decal (A654-12 equivalent)	X	A/R
	A654-10	Decal – "OPEN" (white lettering; Ref)		
	B850-13	Hebrew Decal (A654-10 equivalent)	X	A/R
12	A654-17	Decal – "NO SMOKING" (relocate 0.5 inch left of rivets; Ref)		
	B850-16	Hebrew Decal – "NO SMOKING" (place 0.5 inch right of rivets; A654-17 equivalent)	X	2
13	F463-1	Marking – "DANGER TAIL ROTOR AND HOT EXHAUST" (Ref)		
	B850-19	Hebrew Decal (cover marking; F463-1 equivalent)	X	1
14	F654-27	Decal – "MAXIMUM COMPARTMENT CAPACITY; 10 LB (4.5 KG) (Ref)		
	B850-35	Hebrew Decals (below or adjacent to F654-27 equivalent) . . .	X	A/R

NOTES * Decal and Marking text in quotes. Markings are silk screened on component. See also Figure 11-1.

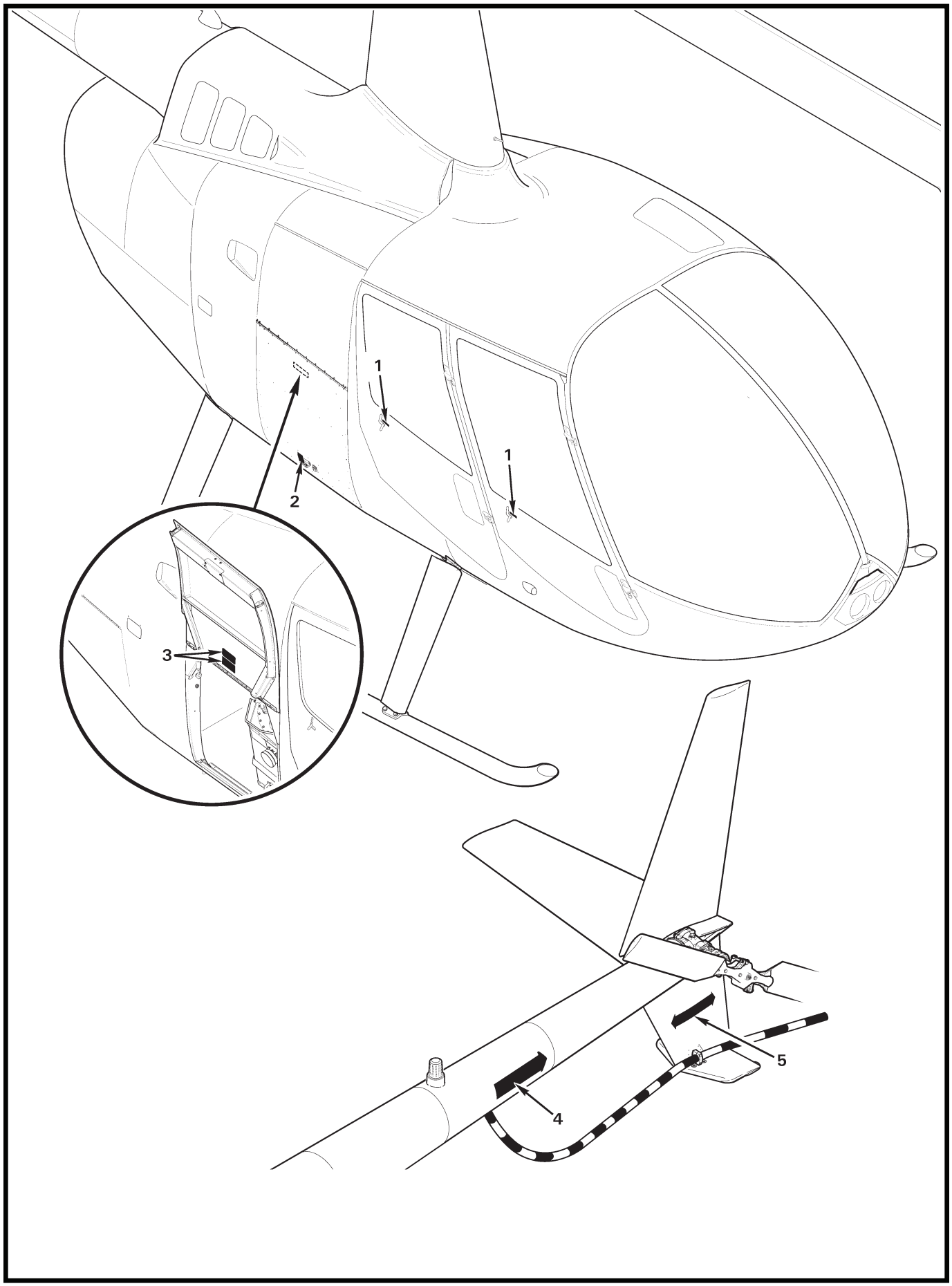
1
1
2
3
4
5

FIGURE AND INDEX NUMBER	PART NUMBER	DESCRIPTION	PARTS AVAIL	QTY PER ASSY
		PLACARDS AND MARKINGS* (HEBREW)		
11-17-1	A654-11	Decal – "OPEN" (black lettering; Ref)		
	B850-14	Hebrew Decal (A654-11 equivalent)	X	A/R
	A654-9	Decal – "OPEN" (white lettering; Ref)		
	B850-12	Hebrew Decal (A654-9 equivalent)	X	A/R
2	F654-8	Decal – "LATCH" (black lettering; Ref)		
	B850-27	Hebrew Decal (F654-8 equivalent)	X	A/R
	F654-9	Decal – "LATCH" (white lettering; Ref)		
	B850-28	Hebrew Decal (F654-9 equivalent)	X	A/R
3	F654-7	Decal – "CAUTION..." (see also, Figures 28-19 and 28-27; Ref)		
	B850-26	Hebrew Decal (below F654-7 equivalent)	X	1
	G682-30	Decal – "CAUTION..." (load maximums; aux fuel tank installed, Ref)		
	B850-36	Hebrew Decal (below G682-30 equivalent)	X	A/R
	F654-26	Decal – "CAUTION..." (police version; Ref)		
	B850-34	Hebrew Decal (below or adjacent to F654-26 equivalent)	X	A/R
4	A654-3	Decal – "DANGER" (Ref)		
	B850-11	Hebrew Decal (trim arrow head fwd end; A654-3 equivalent)	X	2
5	C654-2	Decal – "DANGER" (Ref)		
	B850-21	Hebrew Decal (C654-2 equivalent)	X	2

NOTES * Decal and Marking text in quotes. See also Figures 11-5, 28-19, and 28-27.

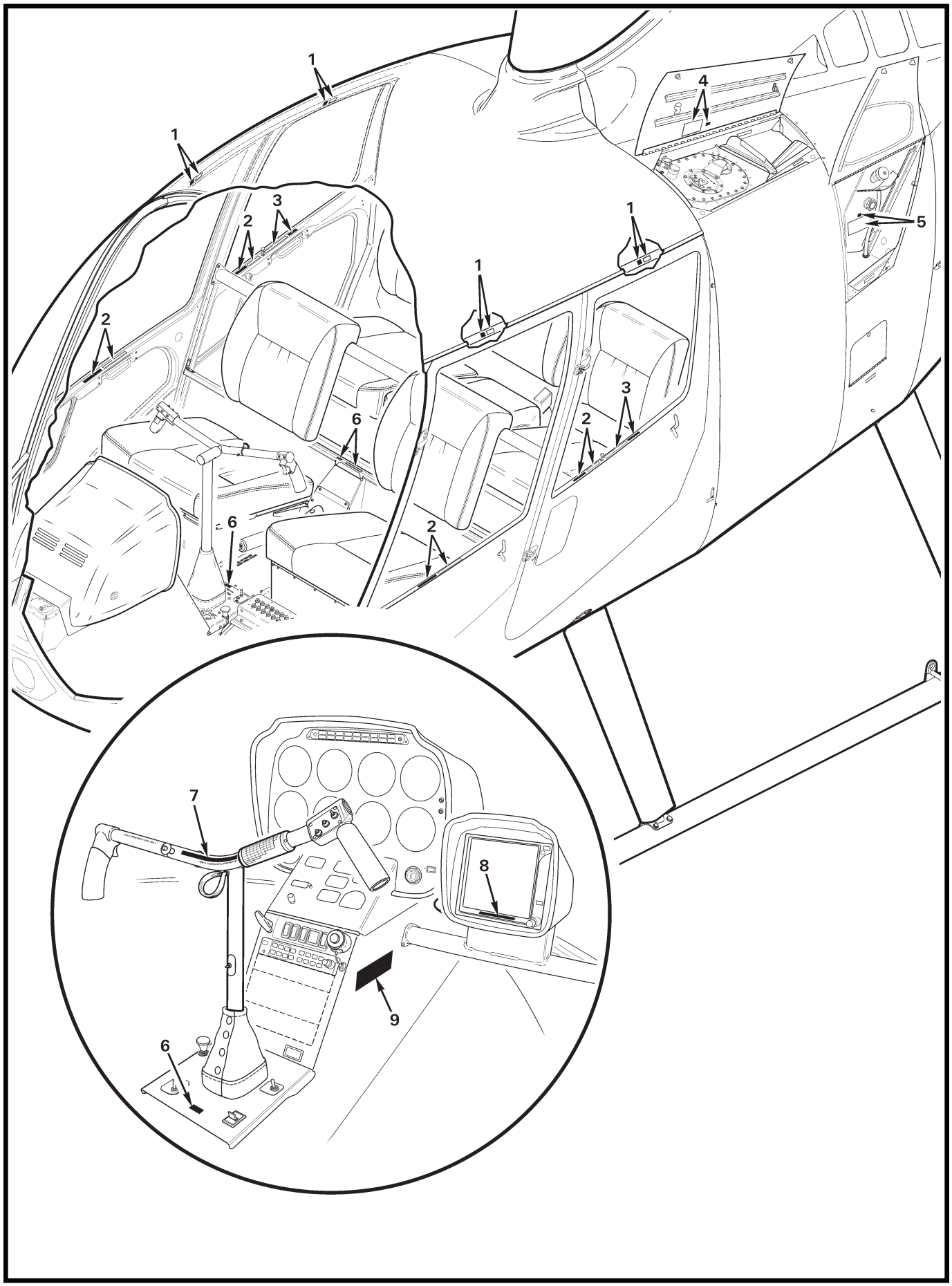
1
1
2
3
2
6
6
1
1
3
2
2
4
5
7
8
9
6

FIGURE AND INDEX NUMBER	PART NUMBER	DESCRIPTION	PARTS AVAIL	QTY PER ASSY
		PLACARDS AND MARKINGS* (JAPANESE)		
11-19-1	F654-22	Decal – "EXIT" (Ref)		
	B840-27	Japanese Decal (F654-22 equivalent)	X	4
2	F654-21	Decal – "TO CLOSE SLIDE HANDLE..." (Ref)		
	B840-25	Japanese Decal (F654-21 equivalent)	X	4
3	F654-20	Decal – "PUSH TO LOCK/DO NOT LOCK IN FLIGHT" (Ref)		
	B840-26	Japanese Decal (F654-20 equivalent)	X	2
4	F654-5	Decal – "FUEL GRADE" (Ref)		
	B840-24	Japanese Decal (F654-5 equivalent)	X	1
5	F654-3	Decal – "ENGINE OIL" (Ref)		
	B840-21	Japanese Decal (F654-3 equivalent)	X	1
6	A654-17	Decal – "NO SMOKING" (Ref)		
	B840-16	Japanese Decal (A654-17 equivalent)	X	2
7	B840-20	Japanese Decal (Low-G Pushovers Prohibited)	X	1
8	B840-23	Japanese Decal (This GPS is Approved for VFR Only)	X	1
9	B840-17	Japanese Decal (Limitations)	X	1

NOTES * Decal and Marking text in quotes. Markings are silk screened on component. See also Figure 11-1.

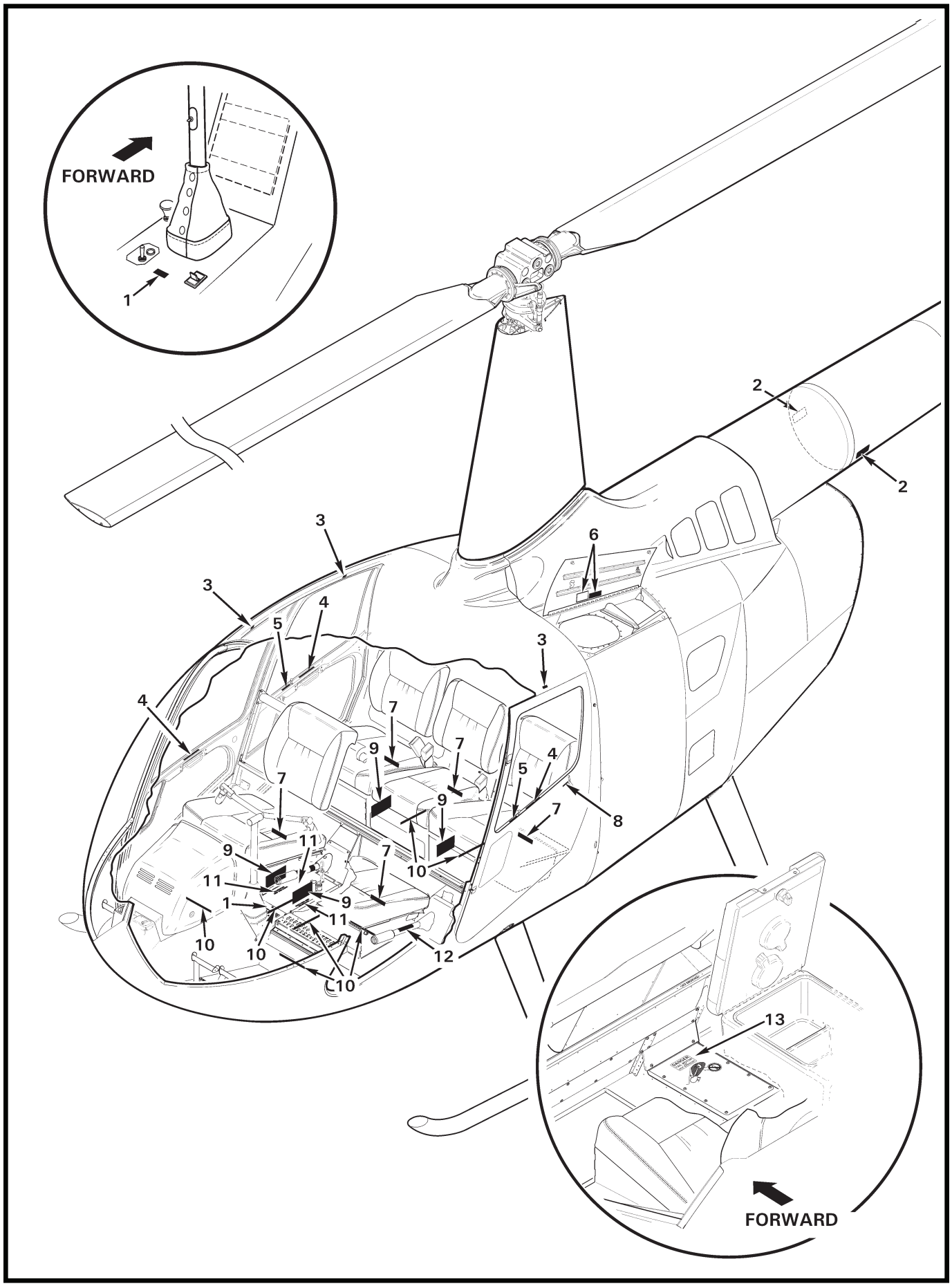
FORWARD
1
2
2
3
3
3
4
4
4
5
5
6
7
7
7
7
7
8
9
9
9
9
10
10
10
10
11
11
11
12
13
FORWARD

FIGURE AND INDEX NUMBER	PART NUMBER	DESCRIPTION	PARTS AVAIL	QTY PER ASSY
		PLACARDS AND MARKINGS* (RUSSIAN)		
11-21-1	F444-1	Marking – “NO SMOKING” (Ref)		
	B830-55	Russian Decal (covers marking; F444 equivalent)	X	2
2	A654-94	Decal – “DANGER HOT EXHAUST” (Ref)		
	B830-97	Russian Decal (A654-94 equivalent)	X	2
3	F654-22	Decal – “EXIT” (Ref)		
	B830-96	Russian Decal (F654-22 equivalent)	X	4
4	F654-21	Decal – “TO CLOSE: SLIDE HANDLE AFT AND DOWN...” (Ref)		
	B830-86	Russian Decal (F654-21 equivalent)	X	4
5	F654-20	Decal – “PUSH TO LOCK / DO NOT LOCK IN FLIGHT” (Ref)		
	B830-87	Russian Decal (F654-20 equivalent)	X	2
6	F654-5	Decal – “FUEL GRADE” (Ref)		
	B830-91	Russian Decal (below or adjacent to F654-5 equivalent)	X	1
7	F654-19	Decal – "ENERGY-ABSORBING SEAT / DO NOT MODIFY" (Ref)		
	B830-88	Russian Decal (F654-19 equivalent)	X	5
8	A654-12	Decal– "OPEN" (black lettering; Ref)		
	B830-25	Russian Decal (white lettering on red background; F654-12 equivalent)	X	2
	A654-10	Decal– "OPEN" (white lettering; (Ref)		
	B830-25	Russian Decal (white lettering on red background; F654-10 equivalent)	X	2
9	F654-10	Decal – “CAUTION” (Ref)		
	B830-89	Russian Decal (F654-10 equivalent)	X	4
10	F654-17	Decal – "MAX FILL LINE" (Ref)		
	B830-90	Russian Decal (F654-17 equivalent)	X	4
11	F445-1	Marking – “NO STOWAGE KEEP AREA CLEAR” (Ref)		
	F445-3	Marking – “NO STOWAGE KEEP AREA CLEAR” (float ships; Ref)		
	B830-50	Russian Decal (covers marking; F445 equivalent)	X	A/R
12	A654-21	Decal – “NO STOWAGE KEEP AREA CLEAR” (Ref)		
	B830-50	Russian Decal (A654-21 equivalent)	X	1
	B830-103	Russian Decal (replaces B830-50 on float ships)	X	1
13	F463-1	Marking – “DANGER TAIL ROTOR AND HOT EXHAUST” (Ref)		
	B830-92	Russian Decal (covers marking; F463-1 equivalent)	X	1

NOTES * Decal and Marking text in quotes. Markings are silk screened on component. See also Figure 11-1.

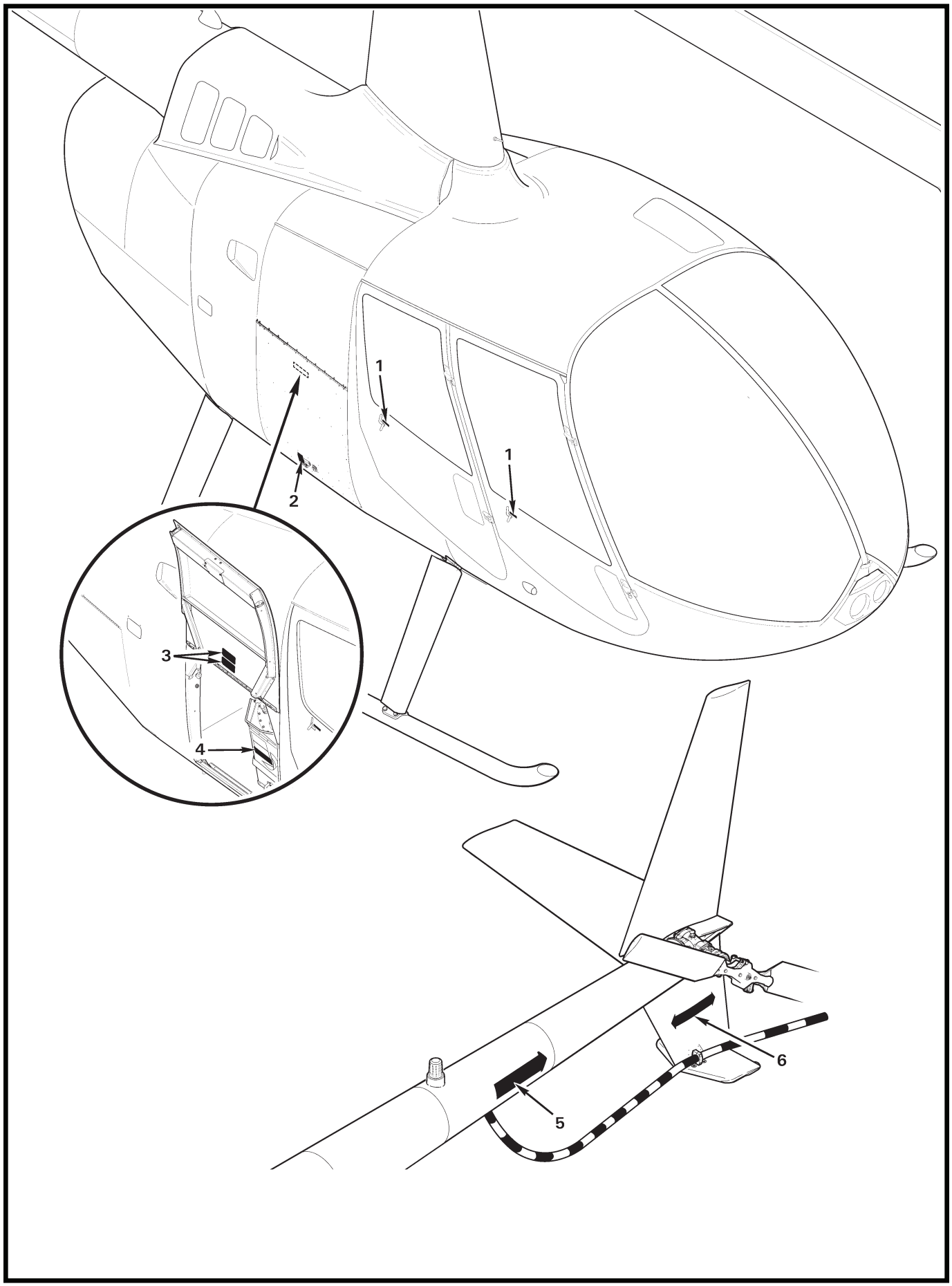
1
1
2
3
4
5
6

FIGURE AND INDEX NUMBER	PART NUMBER	DESCRIPTION	PARTS AVAIL	QTY PER ASSY
		PLACARDS AND MARKINGS* (RUSSIAN)		
11-23-1	A654-11	Decal – "OPEN" (black lettering; Ref)		
	B830-24	Russian Decal (white text on red background; A654-11 equivalent)	X	2
	A654-9	Decal – "OPEN" (white lettering; Ref)		
	B830-24	Russian Decal (white text on red background; A654-9 equivalent)	X	2
2	F654-8	Decal – "LATCH" (black lettering; Ref)		
	B830-93	Russian Decal (F654-8 equivalent)	X	2
	F654-9	Decal – "LATCH" (white lettering; Ref)		
	B830-94	Russian Decal (F654-9 equivalent)	X	2
3	F654-7**	Decal – "CAUTION..." (Ref)		
	B830-95	Russian Decal (F654-7 equivalent)	X	1
4	F654-5**	Decal – "FUEL GRADE" (Ref)		
	B830-91	Russian Decal (F654-5 equivalent)	X	1
5	A654-3	Decal – "DANGER" (Ref)		
	B830-99	Russian Decal (trim arrow head fwd end; A654-3 equivalent)	X	2
6	C654-2	Decal – "DANGER" (Ref)		
	B830-23	Russian Decal (C654-2 equivalent)	X	2

NOTES * Decal and Marking text in quotes. Markings are silk screened on component. See also Figure 11-1.

** See also Figure 11-5.

Intentionally Blank

CHAPTER 12

SERVICING

Figure	*Title*	*Page*
—	Lubricants	12.1
—	Adhesives	12.3

Intentionally Blank

FIGURE AND INDEX NUMBER	PART NUMBER	DESCRIPTION	PARTS AVAIL	QTY PER ASSY
		LUBRICANTS		
12-1-1	A257-1	Grease – Moly Grease 101	X	A/R
2	A257-2	Gear Oil – 201 (SAE 90; 1-gl container)	X	A/R
	A257-2LT	Gear Oil – 201 (SAE 90; 1-lt/qt container)	X	A/R
3	A257-3	Grease – Aeroshell 14 (MIL-G-25537; 14-oz container)	X	A/R
4	A257-4	Oil – Type "A" ATF (Dexron III)	X	A/R
5	A257-5	Grease – Sta-Lube 3120 (Water-Resistant)	X	A/R
		Grease – Lubrimatic 11402 (Water-Resistant)	X	A/R
6	A257-6	Grease – Fuelube (Fuel-Resistant)	X	A/R
		Grease – EZ Turn (Fuel-Resistant)	X	A/R
7	A257-7	Dry Film Lube – Lubri-Kote Type A 1040 CR	X	A/R
8	A257-8	Rubber Lube – International P-80	X	A/R
9	A257-9	Anti-Seize – Silver Grade	X	A/R
10	A257-10	Substitute Item 13		
11	A257-12	Grease – Mobilgrease 28 (MIL-G-81322; 12.5-oz container)	X	A/R
	A257-12.1oz	Grease – Mobilgrease 28 (MIL-G-81322; 1-oz container)	X	A/R
12	A257-15	Hydraulic Fluid (MIL-PRF-5606)	X	A/R
13	A257-16	Engine Oil – (SAE 20W-50, mineral oil for engine break-in)	X	A/R
14	A257-18	Lube – O-Ring (Dow Corning no. 55)	X	A/R
15	A257-19	Valve Lube and Sealant (Dow Corning no. 111)	X	A/R
16	A257-20	Oil – PAG (Apollo America Corp., Daphne Hermetic PR)	X	A/R
17	A257-21	Lube – Petrolatum (Panef Corp. no. P-16)	X	A/R
18	A257-22qt	Gear Oil – Synthetic (Mobil SHC 629)	X	A/R
19	A257-23	Turbine Oil – HTS (MIL-PRF-23699; 1 qt)	X	A/R

NOTES

Intentionally Blank

FIGURE AND INDEX NUMBER	PART NUMBER	DESCRIPTION	PARTS AVAIL	QTY PER ASSY
		ADHESIVES		
12-3-1	B270-1	Sealant – Manganese-Cured (fuel resistant, 2-part; 2 oz.) . . .	X	A/R
	B270-1CN	Sealant – Manganese-Cured (fuel resistant, 2-part; Pint can) . .	X	A/R
2	B270-2	Substitute B270-1		
3	B270-4	Substitute B270-13		
4	B270-5	Sealant – Synthetic Rubber Putty (1-part, 7.5 oz. tube)	X	A/R
5	B270-6	Sealant & Lubricant – Thread (1-part, 16 oz. can)	X	A/R
6	B270-7	Substitute B270-14		
7	B270-8	Adhesive – Rubber, Nitrile/Acetone (1-part, 5 gal pail)	X	A/R
	B270-8.2CC	Adhesive – Rubber, Nitrile/Acetone (1-part, 2cc bottle)	X	A/R
	B270-8.2OZ	Adhesive – Rubber, Nitrile/Acetone (1-part, 2 oz. container) . .	X	A/R
	B270-8QT	Adhesive – Rubber, Nitrile/Acetone (1-part, 1 qt)	X	A/R
8	B270-9	Adhesive – Epoxy, structural, flexible (2-part, 2 oz. kit)	X	A/R
	B270-9PT	Adhesive – Epoxy, structural, flexible (2-part, pint kit)	X	A/R
9	B270-10	Adhesive/Sealant – Threadlocker, anaerobic, tight fits (1-part; 1.69 oz.)	X	A/R
	B270-10.5ML	Adhesive/Sealant – Threadlocker, anaerobic, tight fits (1-part; 0.5 mL)	X	A/R
10	B270-11	Adhesive/Sealant – Threadlocker, anaerobic, loose fits (1-part; 1.69 oz.)	X	A/R
	B270-11.10ML	Adhesive/Sealant – Threadlocker, anaerobic, loose fits (1-part; 10 mL)	X	A/R
	B270-11.5OZ	Adhesive/Sealant – Threadlocker, anaerobic, loose fits (1-part; 0.5 oz.)	X	A/R
11	B270-12.6OZ	Sealant – Electrical Potting (2-part; 6 oz. tube.)	X	A/R
12	B270-13	Sealant – Silicone Rubber, electronic use (1-part; 3 oz. tube)	X	A/R
	B270-13.10OZ	Sealant – Silicone Rubber, electronic use (1-part; 10.3 oz. cartridge)	X	A/R
13	B270-14	Substitute B270-8		
14	B270-15	Adhesive – Plastic, for vinyl (1-part; 1 qt)	X	A/R
15	B270-16	Substitute B270-14	X	A/R
16	B270-17	Adhesive – Cyanoacrylate, instant (1-part; 3 grams)	X	A/R
17	B270-18	Adhesive – Weatherstrip, black (5 oz. tube)	X	A/R
18	B270-19	Adhesive – Epoxy, structural, rigid (2-part, 3M 1838 B/A; source locally)	O	A/R

NOTES

Continues

FIGURE AND INDEX NUMBER	PART NUMBER	DESCRIPTION	PARTS AVAIL	QTY PER ASSY
		ADHESIVES (Cont'd)		
12-3-19	B270-20	Adhesive/Sealant – Threadlocker, anaerobic, non-permanent (1-part; 50 mL)	X	A/R
20	B270-21	Protectant – Corrosion, nondrying (1-part; 11 oz. can)	X	A/R
	B270-21GAL	Protectant – Corrosion, nondrying (1-part; 1 gallon)	X	A/R
21	B270-22	Protectant – Corrosion, drying (1-part; 1 gallon)	X	A/R
22	B270-23	Sealant – Gasket (1-part)	X	A/R
23	B270-24	Activator/Primer – Anaerobic Adhesive (1-part)	X	A/R
24	B270-25	Clear Coat – Automotive Touch Up, brush in bottle (1-part; 1/2 oz. bottle)	X	A/R
25	B270-26	Sealant – Polysulfide, window glazing (2-part; AC Tech AC-251B-1, source locally)	O	A/R
26	B270-27	Adhesive – Epoxy, High Strength, Structural, Flexible (2-part; 2.5 oz. kit)	X	A/R
27	B270-28	Substitute B270-27		

NOTES

CHAPTER 18

TRACK AND BALANCE

Figure	*Title*	*Page*
18-1	TEC ACES Balancing System	18.0
18-3	TEC ACES Balancing System	18.2

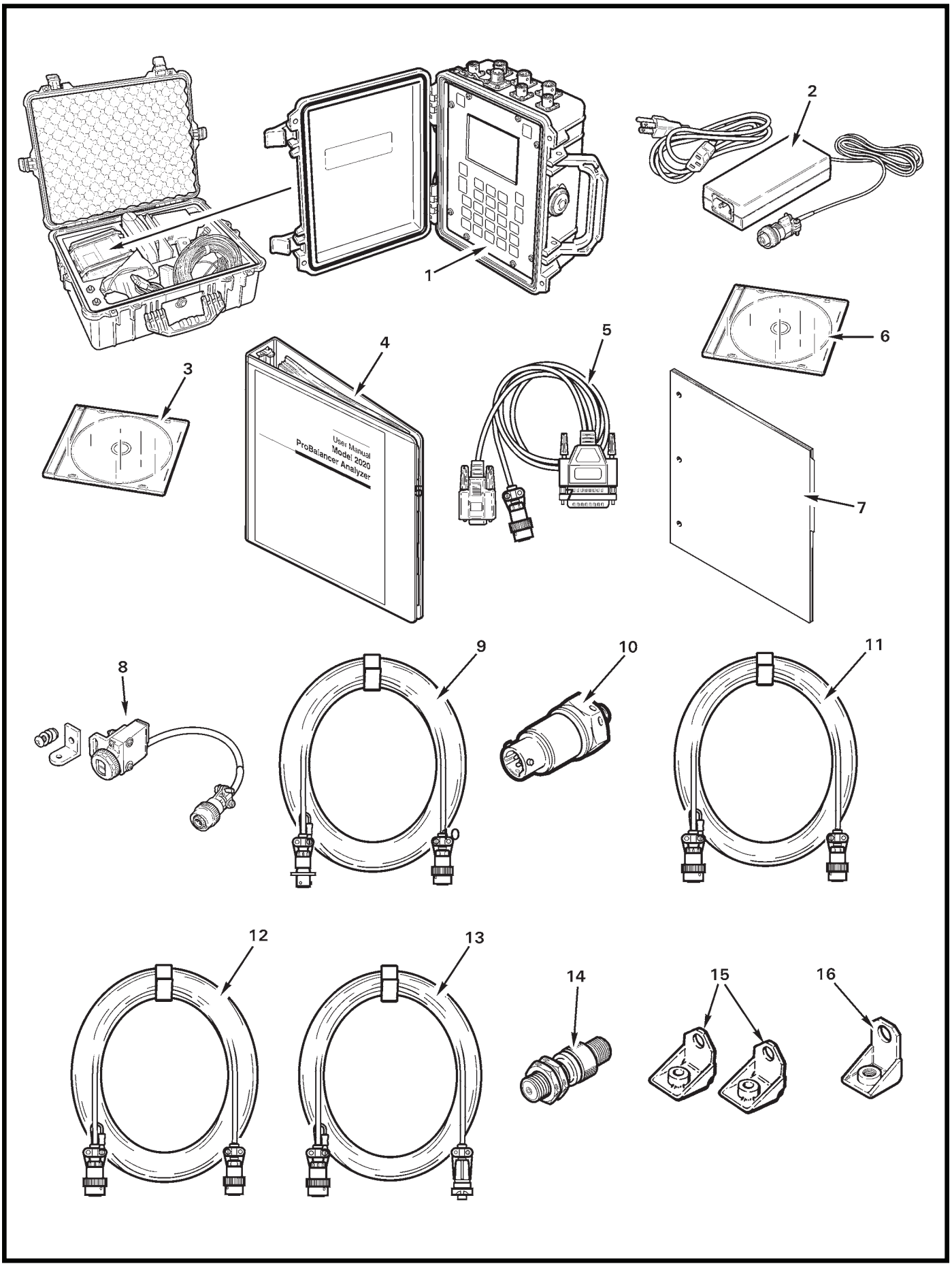

FIGURE 18-1 TEC ACES BALANCING SYSTEM

FIGURE AND INDEX NUMBER	PART NUMBER	DESCRIPTION	PARTS AVAIL	QTY PER ASSY
		TEC ACES BALANCING SYSTEM		
18-1-1	10-100-2020HR	Tec Aces Analyzer and Turbo Probalancing System (Incl items 1 thru 16)	X	1
	Z2020-LGCASE KIT	Carry Case – "Aces 2020"	X	1
2	Z10-320-4043-110V	Charger – NiMH Battery (110V)	X	1
3	75-900-0193D	DVD – "Aces 2020"	X	1
4	75-900-2020	Manual – "Aces 2020" User's Manual	X	1
5	10-320-0157	Cable – "Aces 2020" (6 ft)	X	1
6	10-700-0102	Software – "Avtrend Bronze"	X	1
7	75-900-2026	Manual – "Avtrend Bronze" User's Manual	X	1
8	10-100-1773	Tachometer – Optical Photocell	X	1
9	10-320-0126	Cable – Tachometer (50 ft)	X	1
10	69-100-0075	Sensor – Vibration Transducer	X	2
11	10-320-0162	Cable – Sensor (25 ft)	X	1
12	10-320-0163	Cable – Sensor (50 ft)	X	1
13	10-320-0052	Cable – Magnetic pickup (25 ft)	X	1
14	75-900-0187	Sensor – Magnetic pickup	X	1
15	22-420-0035	Mount – 1/4 in. hole	X	2
16	22-430-0036	Mount – 5/16 in. hole	X	1

NOTES

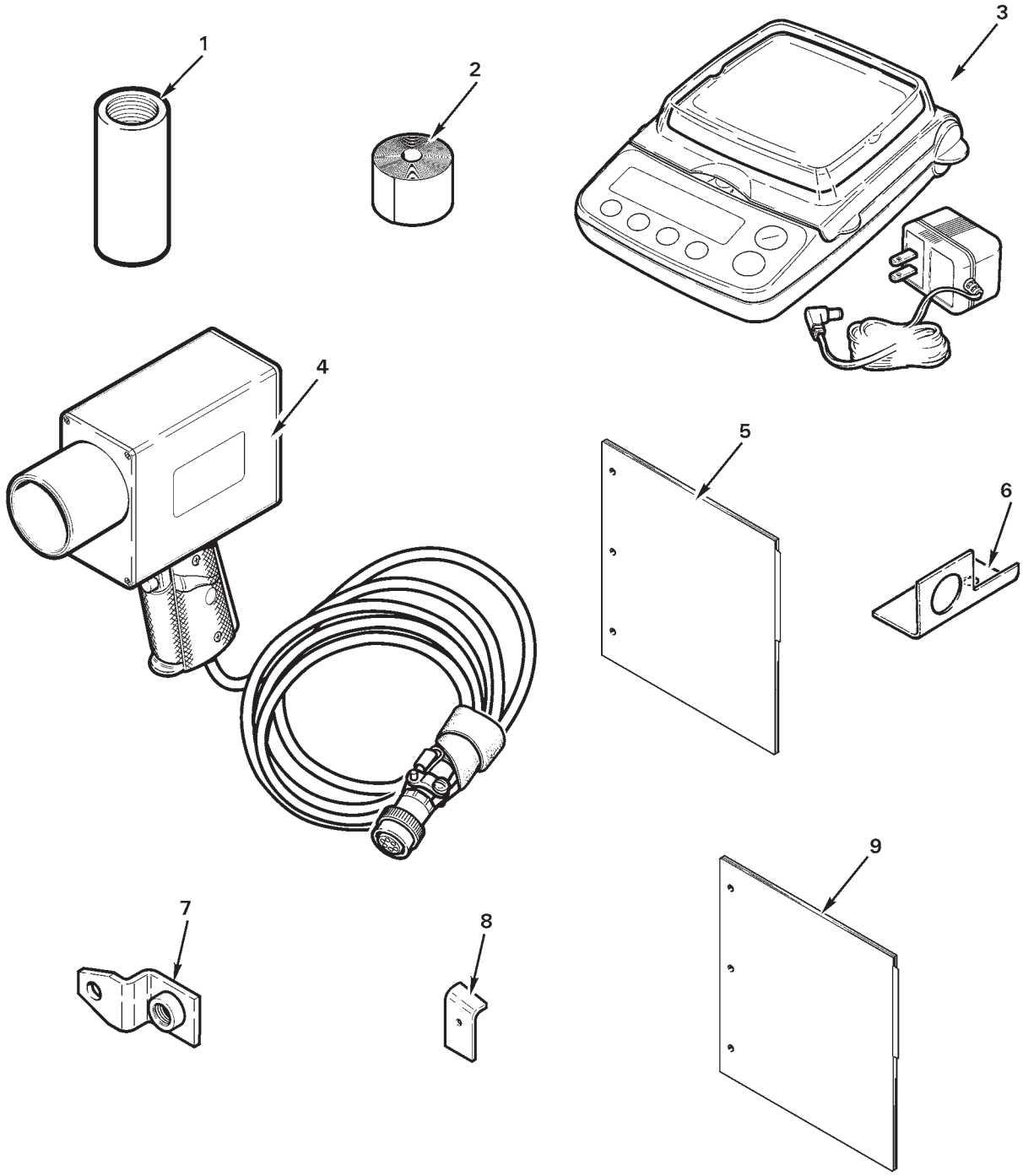

FIGURE 18-3 TEC ACES BALANCING SYSTEM

FIGURE AND INDEX NUMBER	PART NUMBER	DESCRIPTION	PARTS AVAIL	QTY PER ASSY
		TEC ACES BALANCING SYSTEM		
18-3-1	22-430-0096	Sun Shield – Tachometer	X	1
2	10-400-0176	Reflective Tape (10 ft roll)	X	1
3	75-900-0507	Scale	X	1
4	75-900-0542	Tracker – Optical	X	1
5	—	Manual – Optical Tracker (Supplement)	X	1
6	22-430-0066	Mount – Multipurpose	X	1
7	22-430-0037	Mount – Sensor	X	1
8	22-430-0082	Interrupter	X	1
9	75-900-2022	Manual – EPS Supplement	X	1

NOTES

Intentionally Blank

CHAPTER 21

ENVIRONMENT CONTROL

Figure	Title	Page
21-1	Cabin Air Vent – Control Installation	21.0
21-3	Air Conditioning – Compressor Assembly Installation	21.2
21-7	Air Conditioning – Condenser Installation	21.6
21-11	Air Conditioning – Evaporator Assembly Installation	21.10
21-11B	Air Conditioning – Evaporator Drain Installation	21.11A
21-13	Air Conditioning – Evaporator Drain Installation	21.12
21-15	Air Conditioning – Evaporator Electrical Components	21.14
21-17	Air Conditioning – Hose Assemblies	21.16
21-19	Air Conditioning – Line Assemblies	21.18
21-21	Air Conditioning – Duct Assembly Installation	21.20
21-25	Air Conditioning – Furnishings	21.24
21-27	Air Conditioning – Electrical Components	21.26
21-31	Cabin Heater – Control Installation	21.30
21-33	Cabin Heater – Forward Components Installation	21.32
21-35	Cabin Heater – Muffler & Control Valve Installation	21.34
21-39	Cabin Heater – Aft Components Installation	21.38

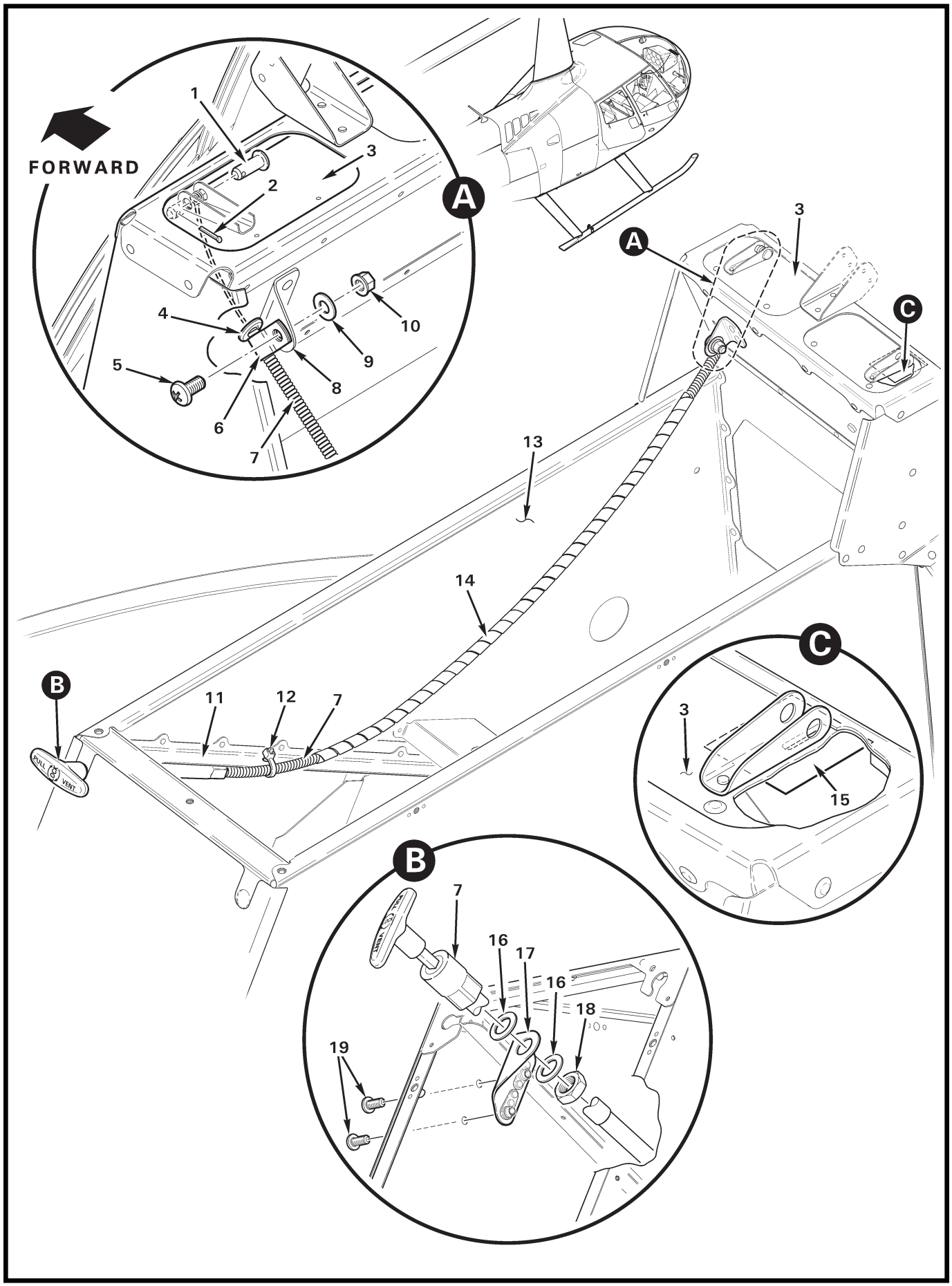
FORWARD
A
1
2
3
4
5
6
7
8
9
10
A
3
C
13
14
B
11
12
7
PULL
VENT
C
3
15
B
7
16
17
16
18
19

FIGURE AND INDEX NUMBER	PART NUMBER	DESCRIPTION	PARTS AVAIL	QTY PER ASSY
		CABIN AIR VENT – CONTROL INSTALLATION		
21-1-1	MS20392-2C13	Pin	X	1
2	MS24665-86	Cotter Pin	X	1
3	C358-4	Flap (door; Ref)		
4	MS35489-4	Grommet	X	1
5	MS27039C1-06	Screw	X	1
6	AN742-3	Clamp	X	1
7	C522-5*	Control Assembly – Cabin Air (Incl items 16 and 18)	X	1
8	A523-6	Angle (Ref)		
9	NAS1149F0332P	Washer	X	1
10	D210-3	Nut	X	1
11	F365-1	Angle (Ref)		
12	MS3367-5-9	Ty-Rap	X	1
13	F359	Panel (Ref)		
14	B161-4	Spirap (optional to protect adjacent wires)	X	A/R
15	A701-1	Tape (install on underside of item 3, RH; to cover unused slot)	X	A/R
16	—	Washer	O	2
17	C365-13	Mount Assembly	X	1
18	—	Nut	O	1
19	MS27039C0806	Screw	X	2

NOTES * Install with knob horizontal within 15 degrees when locked. Clearance under knob to be 0.03 to 0.10 inch with knob fully depressed.

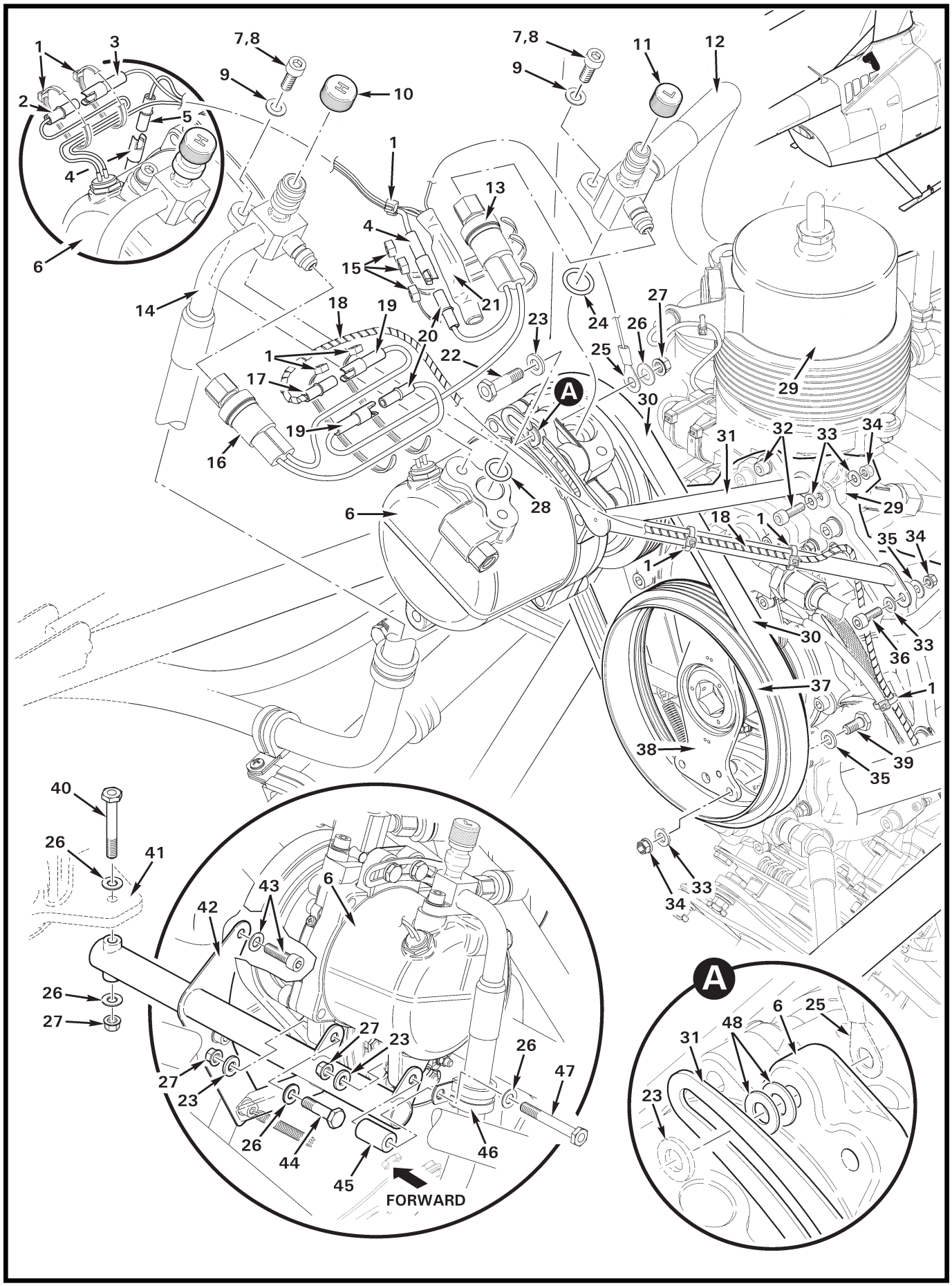
1
2
3
4
5
6
7,8
9
10
11
12
13
14
15
16
17
18
19
20
21
22
23
24
25
26
27
28
29
30
31
32
33
34
35
36
37
38
39
40
41
42
43
44
45
46
47
48
A
FORWARD

FIGURE AND INDEX NUMBER	PART NUMBER	DESCRIPTION	PARTS AVAIL	QTY PER ASSY
		AIR CONDITIONING – COMPRESSOR ASSEMBLY INSTALLATION		
21-3-1	MS3367-4-9	Ty-Rap	X	A/R
2	B263-11	Housing	X	1
	B263-4	Socket	X	1
3	B263-10	Housing	X	2
	B263-1	Pin	X	2
4	B263-10	Housing	X	2
	B263-3	Pin	X	2
5	B263-11	Housing	X	1
	B263-2	Socket	X	1
6	G777-1	Compressor Assembly (Incl items 2 and 4)	X	1
7	91292A135	Screw (install using one drop item 8 on threads)	X	2
8	B270-20	Adhesive	X	A/R
9	NAS620-416L	Washer	X	2
10	MT0311	Cap – Valve (light blue plastic, high pressure port)	X	1
11	MT0310	Cap – Valve (light blue plastic, low pressure port)	X	1
12	G794-1	Hose Assembly (Ref)		
13	D799-3	Switch Assembly (low-pressure cutout; includes items 19 and 20)	X	1
14	G794-2	Hose Assembly (Ref)		
15	MS3367-5-9	Ty-Rap	X	3
16	D799-9	Switch Assembly (high-pressure cutout; includes items 19 and 20)	X	1
17	B263-11*	Housing	X	1
	B263-2*	Socket	X	1
18	B161-2*	Spirap	X	A/R
19	B263-10	Housing	X	2
	B263-3	Pin	X	2
20	B263-11	Housing	X	2
	B263-3	Pin	X	2
21	G799-5	Snubber Assembly (Incl items 3, 5, and 25)	X	1
22	NAS6604-11	Bolt	X	2
23	NAS1149F0463P	Washer	X	4
24	F215-2	O-Ring	X	1
25	B260-5	Terminal	X	1
26	NAS1149F0432P	Washer	X	6

NOTES * Included with F049-01 MRGB harness assembly.

Continues

FIGURE AND INDEX NUMBER	PART NUMBER	DESCRIPTION	PARTS AVAIL	QTY PER ASSY
		AIR CONDITIONING – COMPRESSOR ASSEMBLY INSTALLATION (Cont'd)		
21-3-27	D210-4	Nut	X	5
28	F215-1	O-Ring	X	1
29	D211-3	Reservoir Assembly (Ref)		
30	B173-5	V-Belt	X	1
31	G781-1	Arm Weldment	X	1
32	NAS1351-3-16P	Screw	X	2
33	NAS620-10L	Washer	X	9
34	D210-3	Nut	X	7
35	NAS1149F0332P	Washer	X	5
36	NAS1351-3-10P	Screw	X	1
37	G779-1	Pulley	X	1
38	F908-1	Yoke Assembly (Ref; see Figure 63-3)		
39	NAS6603-4	Bolt	X	4
40	NAS6604-22	Bolt	X	1
41	F006-1	Main Rotor Gearbox Assembly (Ref; see Figure 63-3)		
42	G782-1	Mount Weldment	X	1
43	–	Existing MRGB Hardware (Ref; see Figure 63-3)		
44	NAS6604-10	Bolt	X	1
45	A130-43	Spacer	X	1
46	MS21333-105	Clamp	X	1
47	NAS6604-24	Bolt	X	1
48	NAS1149F0432P*	Washer ([4] required each fastener. 0 – 4 washers required to fill any gap greater than 0.016 inch between items 6 and 31 [measured at inboard fastener]. Install remaining washers between items 23 and 31.)	X	8

NOTES * Washer positions on outboard bolt to be same as inboard bolt.

Intentionally Blank

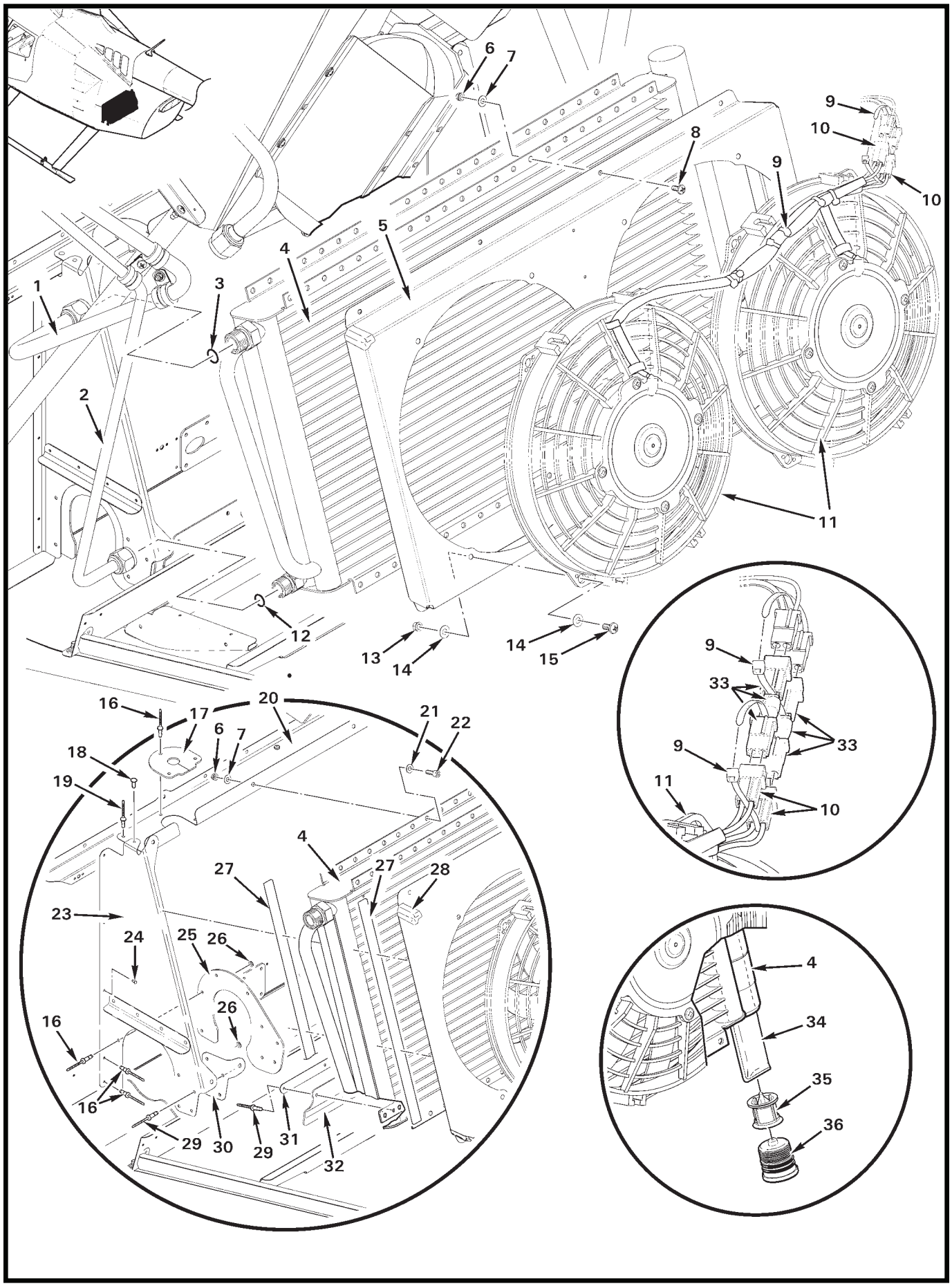
1
2
3
4
5
6
7
8
9
10
11
12
13
14
15
16
17
18
19
20
21
22
23
24
25
26
27
28
29
30
31
32
33
34
35
36

FIGURE AND INDEX NUMBER	PART NUMBER	DESCRIPTION	PARTS AVAIL	QTY PER ASSY
		AIR CONDITIONING – CONDENSER INSTALLATION		
21-7-1	G810-1	Line Assembly (Ref)		
2	G811-1	Line Assembly (Ref)		
3	24608	O-Ring (Ref)		
4	G783-1	Condenser (Incl items 34 thru 36)	X	1
5	G786-1	Box Assembly (Incl item 28)	X	1
6	MS21042L08	Nut	X	14
7	NAS1149FN816P	Washer	X	14
8	MS27039C0806	Screw	X	8
9	MS3367-5-9	Ty-Rap	X	A/R
10	B263-12	Housing	X	1
	B263-1	Pin	X	2
11	G780-1	Fan Assembly (Incl item 10)	X	2
12	24606	O-Ring (Ref)		
13	MS21042L3	Nut	X	8
14	NAS1149F0316P	Washer	X	16
15	MS27039C1-07	Screw	X	8
16	NAS9301B-4-02	Rivet	X	15
17	G788-3	Seal	X	1
18	MS20470AD3	Rivet (or NAS9301B-4-02)	X	2
19	NAS9301B-4-01	Rivet	X	6
20	G785-1	Angle	X	1
21	NAS620-10	Washer	X	6
22	NAS1352-08-8P	Screw	X	6
23	G787-1	Support (LH; includes items 16, 25, 26, 29, and 30)	X	1
	G787-2	Support (RH; includes items 16, 25, 26, 29, and 30)	X	1
24	MS20615-3M	Rivet (upper)	X	6
25	G788-2	Seal	X	1
26	NAS620-5	Washer	X	8
27	93745K41	Seal (self-adhesive)	X	A/R
28	A701-1	Foil Tape	X	A/R
29	NAS9301B-4-03	Rivet ([4] required with item 23)	X	7
30	G787-3	Bracket (LH)	X	1
	G787-4	Bracket (RH)	X	1
31	G785-2	Retainer	X	1
32	G788-1	Seal	X	1

NOTES

Continues

FIGURE AND INDEX NUMBER	PART NUMBER	DESCRIPTION	PARTS AVAIL	QTY PER ASSY
		AIR CONDITIONING – CONDENSER INSTALLATION (Cont'd)		
21-7-33	G804-1	EMI Filter Assembly (condenser fan; installed on one or the other or both as required to eliminate Electromagnetic Interference in the radios from the condenser fans)	X	A/R
34	G783-2	Desiccant Bag	X	1
35	—	Filter	O	1
36	—	Cap	O	1

NOTES

Intentionally Blank

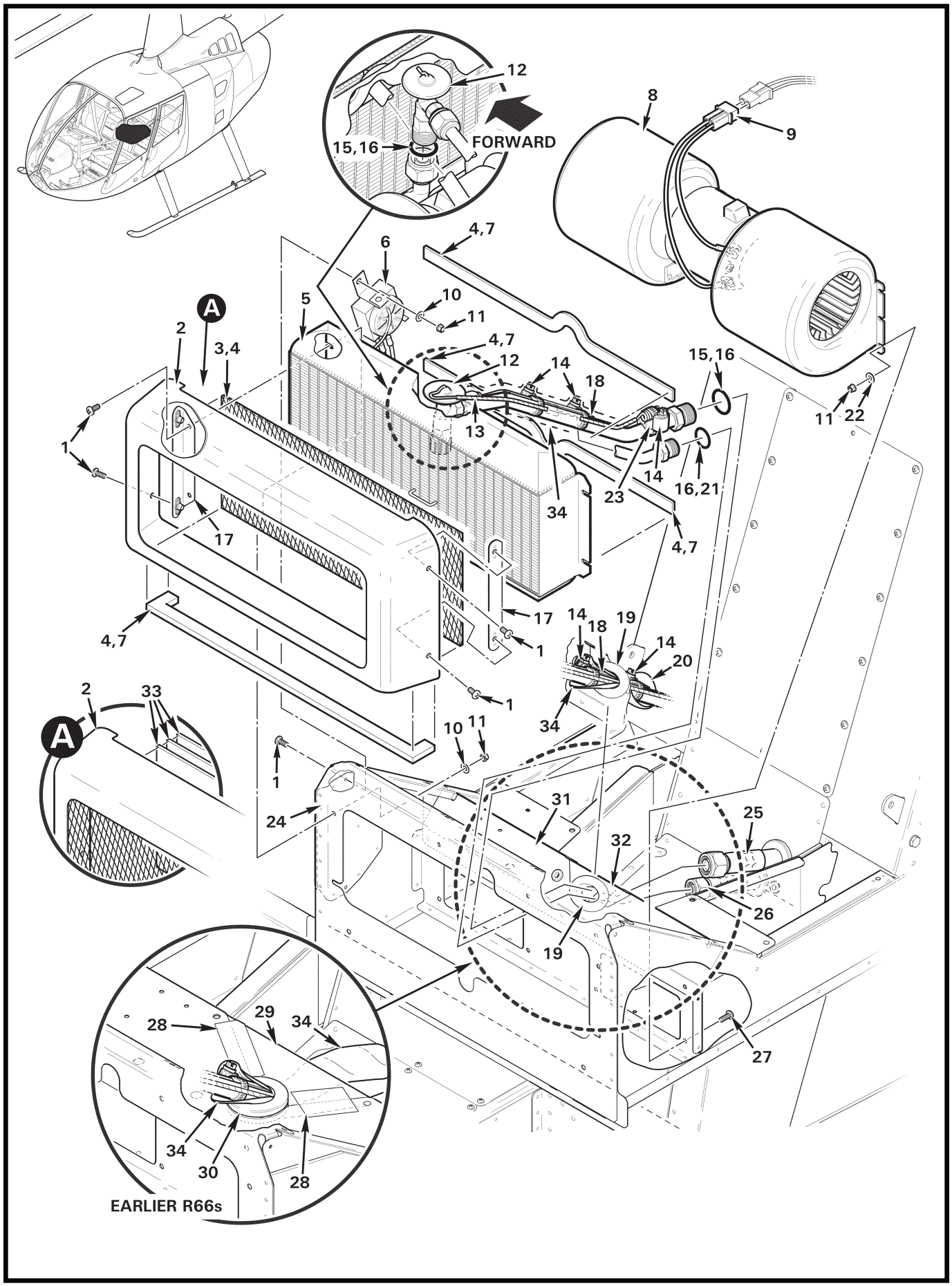
12
FORWARD
15,16
8
9
4,7
6
10
11
5
A
2
3,4
4,7
12
14
18
15,16
11
22
13
1
14
16,21
23
34
17
4,7
17
14
18
19
14
20
1
4,7
2
33
A
1
34
10
11
1
24
31
25
32
26
19
29
28
34
27
34
30
28
EARLIER R66s

FIGURE AND INDEX NUMBER	PART NUMBER	DESCRIPTION	PARTS AVAIL	QTY PER ASSY
		AIR CONDITIONING – EVAPORATOR ASSEMBLY INSTALLATION		
21-11-1	MS27039C0806	Screw	X	8
2	G798-1	Cover Assembly (Incl items 3 and 4)	X	1
3	F389-1	Screen (install using item 4)	X	1
4	B270-1	Sealant	X	A/R
5	G784-1	Evaporator Assembly	X	1
6	D799-7	Switch Assembly – Freeze (Ref, see Figure 21-15)		
7	93745K41	Seal (install using item 4)	X	A/R
8	G791-1	Blower Assembly (Incl item 9)	X	1
9	G791-2	Harness Assembly (includes B263-12 housing, [2] B263-3 pins, -2295 & -2298 wires, and [2] B262-5 receptacle)	X	1
10	NAS1149FN816P	Washer	X	4
11	MS21042L08	Nut	X	13
12	G778-1	Thermal Expansion Valve (TXV)	X	1
13	B161-2	Spirap	X	A/R
14	B277-8	Clamp	X	3
15	F215-013	O-Ring (install using item 16)	X	2
16	A257-20	Oil – Pag	X	A/R
17	F385-8	Bracket Assembly	X	2
18	D785-7	Cradle	X	1
19	MS35489-20*	Grommet	X	1
20	5541K11	Pipe Wrap (around inlet & outlet lines, nuts, cradle, & clamp)	X	A/R
21	F215-011	O-Ring (install using item 16)	X	2
22	NAS1149FN832P	Washer	X	8
23	D785-2	Cradle	X	1
24	F377-1	Support Assembly – Middle Seat (Ref)		
25	G794-1	Hose Assembly (Ref, see Figure 21-17)		
26	G794-3	Hose Assembly (Ref, see Figure 21-17)		
27	MS27039C0807	Screw	X	8
28	A701-1	Tape (optional)	X	A/R
29	F380-7	Cover (Ref)		
30	MS35489-23*	Grommet	X	1
31	F393-1	Shield (Ref)		
32	F393-2	Cover (bend tabs on item 31 as required to retain)	X	1
33	D812-9	Screen (as required for evaporator noise suppression; 3 max)	X	A/R
34	A701-17	Tape	X	A/R

NOTES * May be split and bonded at split after installation using B270-17 adhesive.

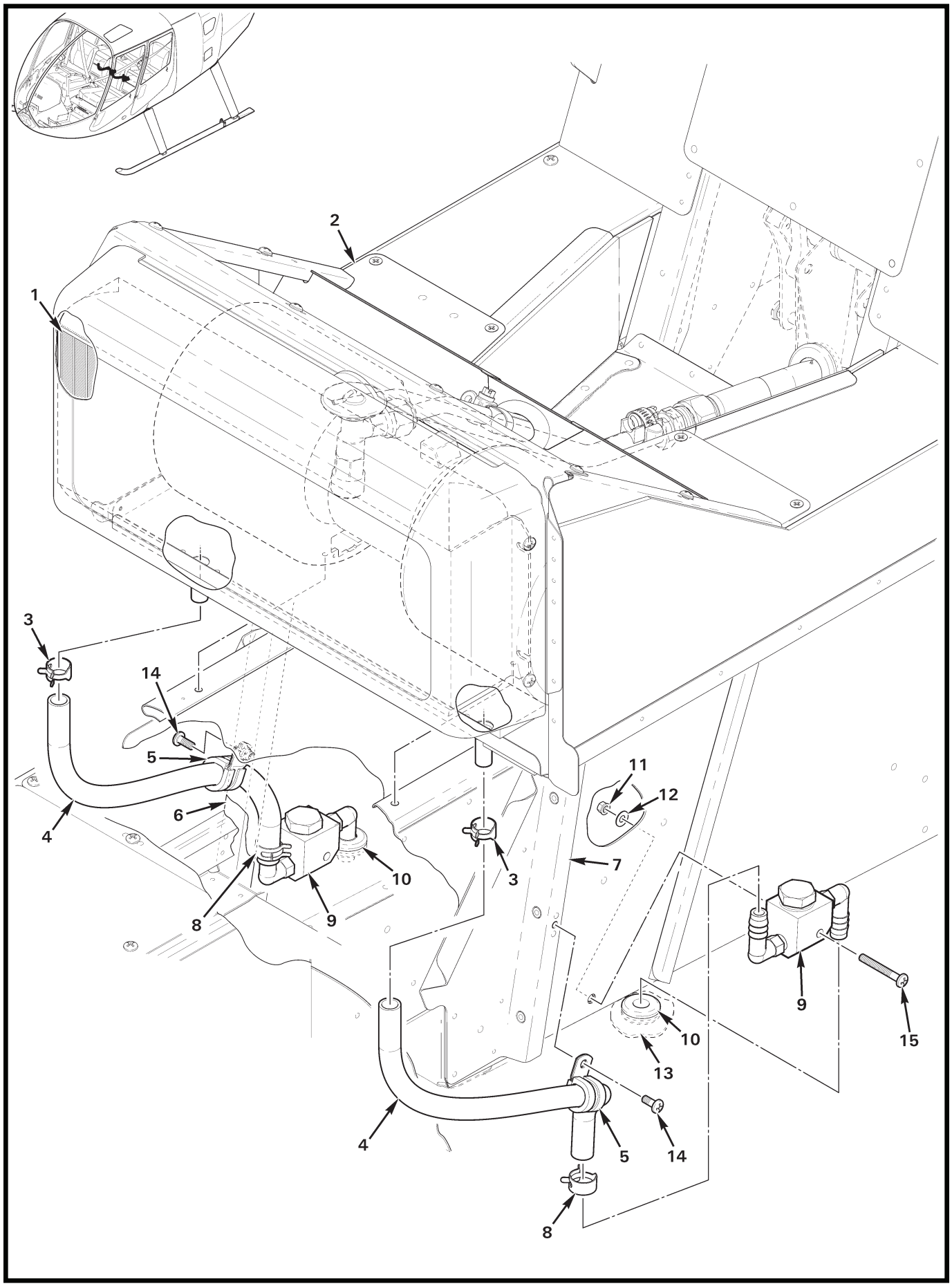
1
2
3
4
5
6
7
8
9
10
11
12
13
14
15

FIGURE AND INDEX NUMBER	PART NUMBER	DESCRIPTION	PARTS AVAIL	QTY PER ASSY
		AIR CONDITIONING – EVAPORATOR DRAIN INSTALLATION		
21-11B-1	G784-1	Evaporator Assembly (Ref, see Figure 21-11)		
2	F377-1	Seat Assembly – Middle, Aft (Ref)		
3	D277-8	Clamp	X	2
4	A729-59	Tube	X	2
5	MS21919WDG8	Clamp	X	2
6	F382-6	Stiffener (RH; Ref)		
7	F382-5	Stiffener (LH; Ref)		
8	D277-9	Clamp (point prongs toward keel panel ± 90º)	X	2
9	D789-11	Drain Assembly	X	2
10	MS35489-11	Grommet	X	2
11	MS21042L08	Nut	X	2
12	NAS1149FN816P	Washer	X	2
13	F387-1	Belly Panel (Ref)		
14	MS27039C0806	Screw	X	2
15	MS27039C0820	Screw	X	2

NOTES

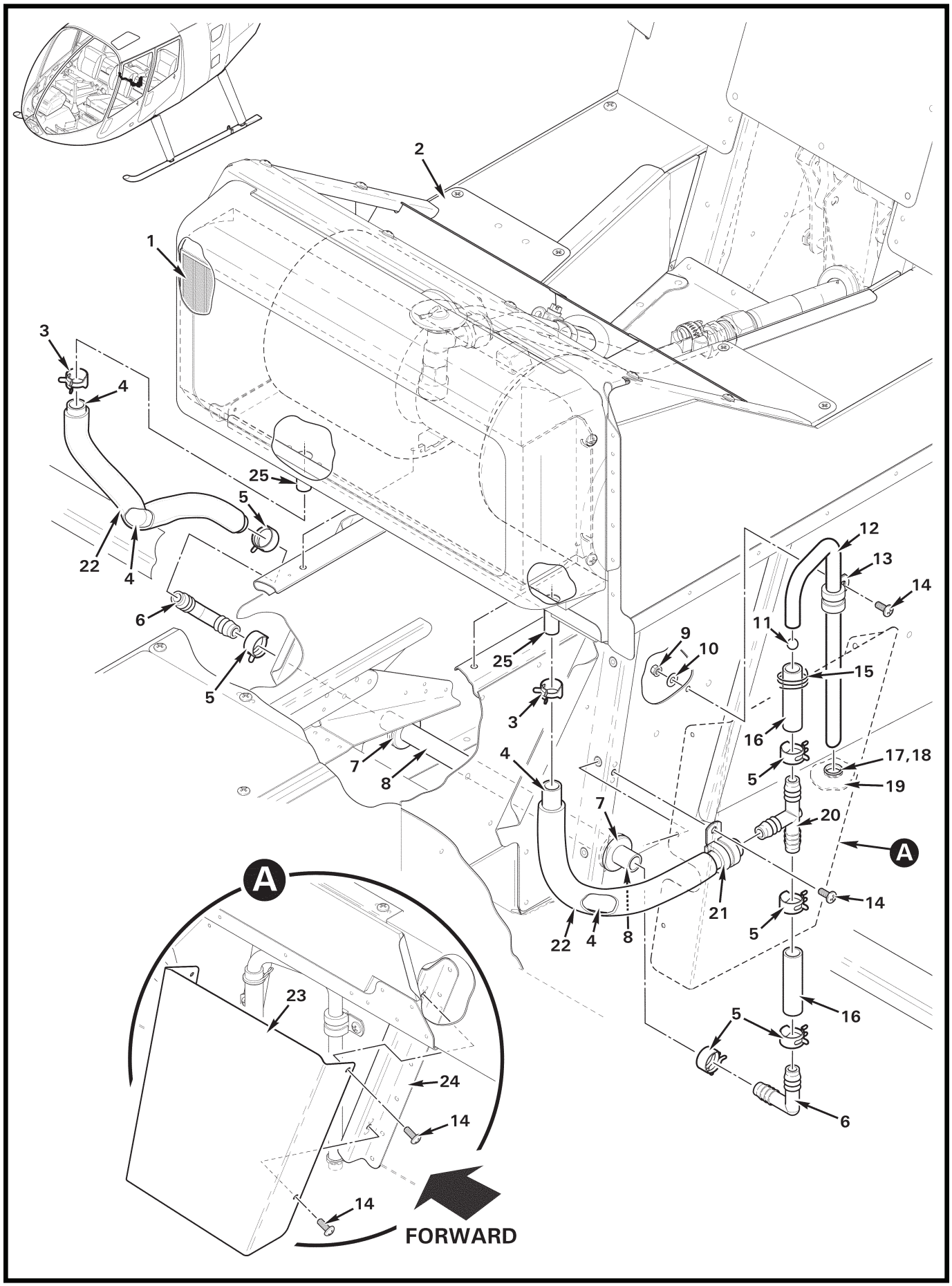
1
2
3
4
5
6
7
8
9
10
11
12
13
14
15
16
17,18
19
20
21
22
23
24
25
A
FORWARD

FIGURE AND INDEX NUMBER	PART NUMBER	DESCRIPTION	PARTS AVAIL	QTY PER ASSY
		AIR CONDITIONING – EVAPORATOR DRAIN INSTALLATION		
21-13-1	G784-1	Evaporator Assembly (Ref, see Figure 21-11)		
2	F377-1	Seat Assembly – Middle, Aft (Ref)		
3	D277-8	Clamp	X	2
4	A729-59	Hose	X	2
5	D277-9	Clamp	X	6
6	A457-7	Elbow	X	2
7	MS35489-149	Grommet	X	2
8	A729-58	Hose	X	1
9	MS21042L08	Nut	X	1
10	NAS1149FN816P	Washer	X	1
11	B208-9	Ball	X	1
12	D789-10	Tube	X	1
13	MS21919WDG6	Clamp	X	1
14	MS27039C0806	Screw	X	4
15	MS20995C32	0.032 inch dia. Safety Wire	X	A/R
16	A729-57	Hose	X	2
17	NAS557-6A	Grommet (install using item 18; seal all around grommet and tube, both sides of belly panel)	X	1
18	B270-1	Sealant	X	A/R
19	F387-1	Belly Panel (Ref)		
20	A457-1	Tee	X	1
21	MS21919WDG8	Clamp	X	1
22	5541K11	Pipe Wrap	X	A/R
23	G789-1	Cover	X	1
24	F466-3	Stiffener (Ref)		
25	A456-1	Drain	X	2

NOTES

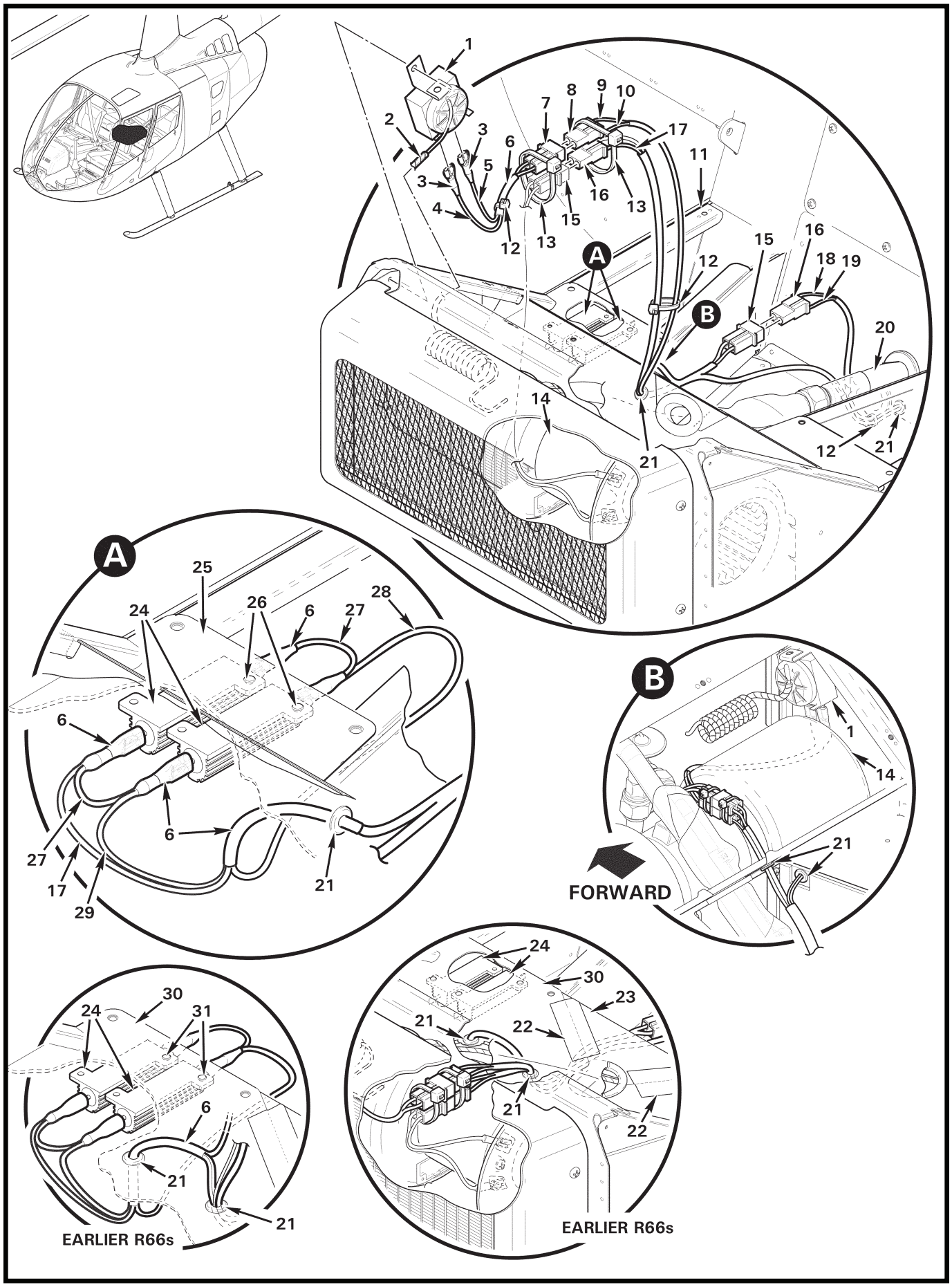
1
2
3
4
5
6
7
8
9
10
11
12
13
14
15
16
17
18
19
20
21
A
B
25
24
26
27
28
29
30
31
22
23
FORWARD
EARLIER R66s
EARLIER R66s

FIGURE AND INDEX NUMBER	PART NUMBER	DESCRIPTION	PARTS AVAIL	QTY PER ASSY
		AIR CONDITIONING – EVAPORATOR ELECTRICAL COMPONENTS		
21-15-1	D799-7	Switch Assembly – Freeze (Incl items 3 thru 7, see Figure 21-11)	X	1
2	B161-2	Spirap	X	A/R
3	B158-4	Heat Shrink	X	A/R
4	-1804	Wire (Ref)		
5	-1809	Wire (Ref)		
6	B158-3	Heat Shrink	X	A/R
7	B263-32	Housing	X	1
	B263-1	Pin	X	2
8	B263-33	Housing	X	1
	B263-2	Socket	X	2
9	-2299	Wire (Ref)		
10	-2294	Wire (Ref)		
11	F377-1	Support Assembly – Middle Seat (Ref)		
12	MS3367-4-9	Ty-Rap	X	A/R
13	MS3367-5-9	Ty-Rap	X	A/R
14	G791-1	Blower Assembly (Ref, see Figure 21-11)		
15	B263-12	Housing (Ref)		
16	B263-4	Socket	X	1
17	-2295	Wire (Ref)		
18	-2365	Wire (Ref)		
19	-2364	Wire (Ref)		
20	G794-1	Hose Assembly (Ref, see Figure 21-17)		
21	MS35489-4	Grommet	X	3
22	A701-1	Tape (Ref; optional, earlier R66s)		
23	F380-7	Cover (Ref; earlier R66s)		
24	G799-2	Resistor Assembly (Incl items 3, 6, 16, 17, and 27 thru 29)	X	2
25	F378-4	Panel (Ref)		
26	MS20604ML4W2	Rivet	X	4
27	B274-14	Wire	X	2
28	-2365	Wire (Ref)		
29	-2364	Wire (Ref)		
30	F380-6	Panel (Ref; earlier R66s)		
31	B204-1	Rivet (earlier R66s)	X	2

NOTES

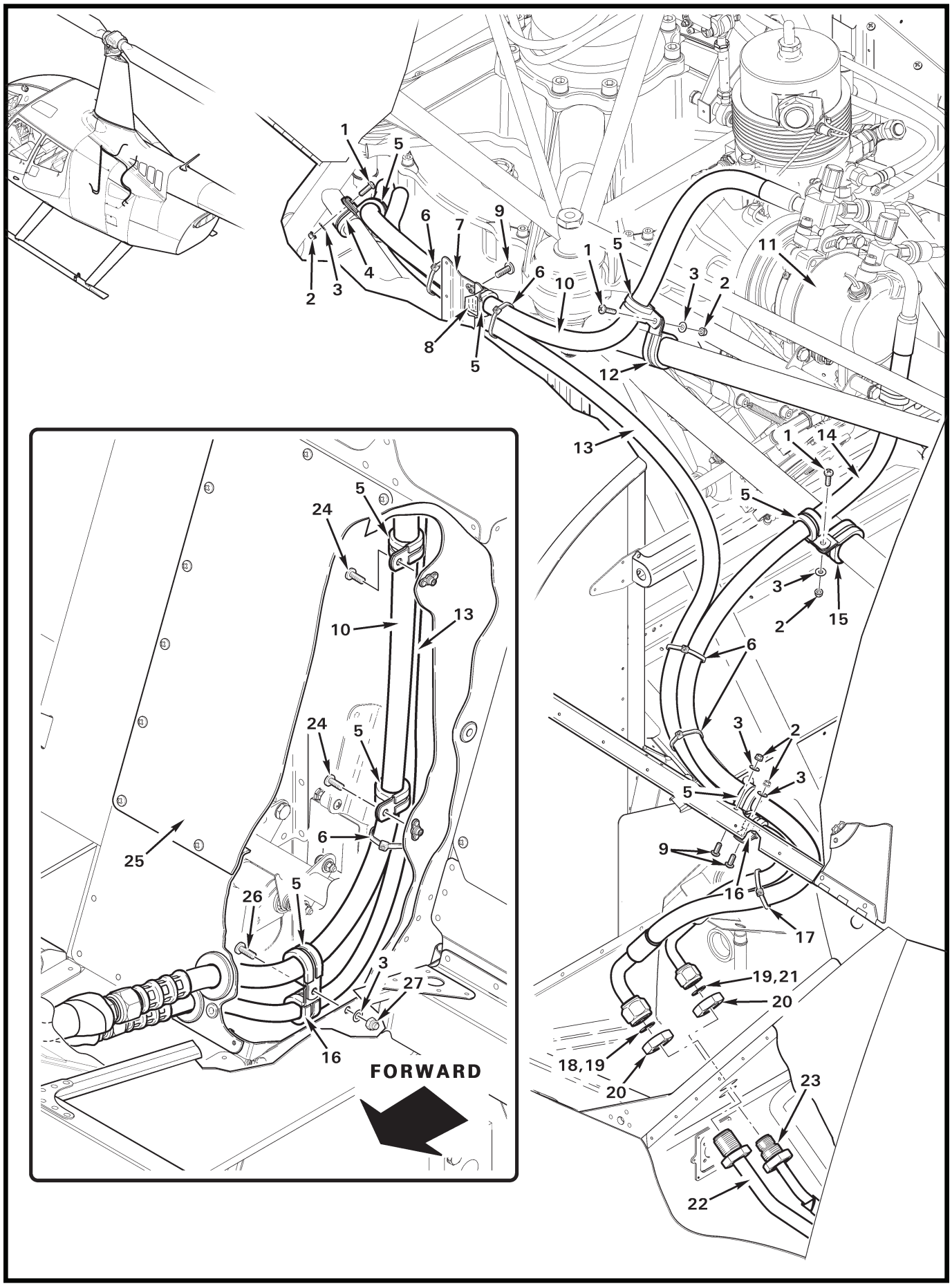
1
5
6
7
9
4
2
3
8
10
11
12
13
14
15
16
17
18,19
19,21
20
22
23
24
25
26
27
FORWARD

FIGURE AND INDEX NUMBER	PART NUMBER	DESCRIPTION	PARTS AVAIL	QTY PER ASSY
		AIR CONDITIONING – HOSE ASSEMBLIES		
21-17-1	MS27039C0808	Screw	X	3
2	MS21042L08	Nut	X	5
3	NAS1149FN816P	Washer	X	6
4	MS21919WDG12	Clamp	X	1
5	MS21919WDG11	Clamp	X	8
6	MS3367-5-9	Ty-Rap	X	A/R
7	F231-3	Stiffener (Ref)		
8	A701-5	Tape (anti-chafe)	X	A/R
9	MS27039C0806	Screw	X	3
10	G794-1	Hose Assembly	X	1
11	G777-1	Compressor Assembly (Ref)		
12	MS21919WDG16	Clamp	X	1
13	G794-3	Hose Assembly	X	1
14	G794-2	Hose Assembly	X	1
15	MS21919WDG18	Clamp	X	1
16	MS21919WDG9	Clamp (around item 13)	X	2
17	MS3367-5-0	Ty-Rap	X	1
18	24608	O-Ring (install using item 19)	X	1
19	A257-20	Pag Oil	X	A/R
20	AN924-8D	Nut	X	2
21	24606	O-Ring (install using item 19)	X	1
22	G810-1	Line Assembly (Ref)		
23	G811-1	Line Assembly (Ref)		
24	MS27039C0807	Screw	X	2
25	F474-2	Cover Assembly (Ref; behind aft center back rest assembly)		
26	MS27039C0810	Screw	X	1
27	B340-4	Nut	X	1

NOTES

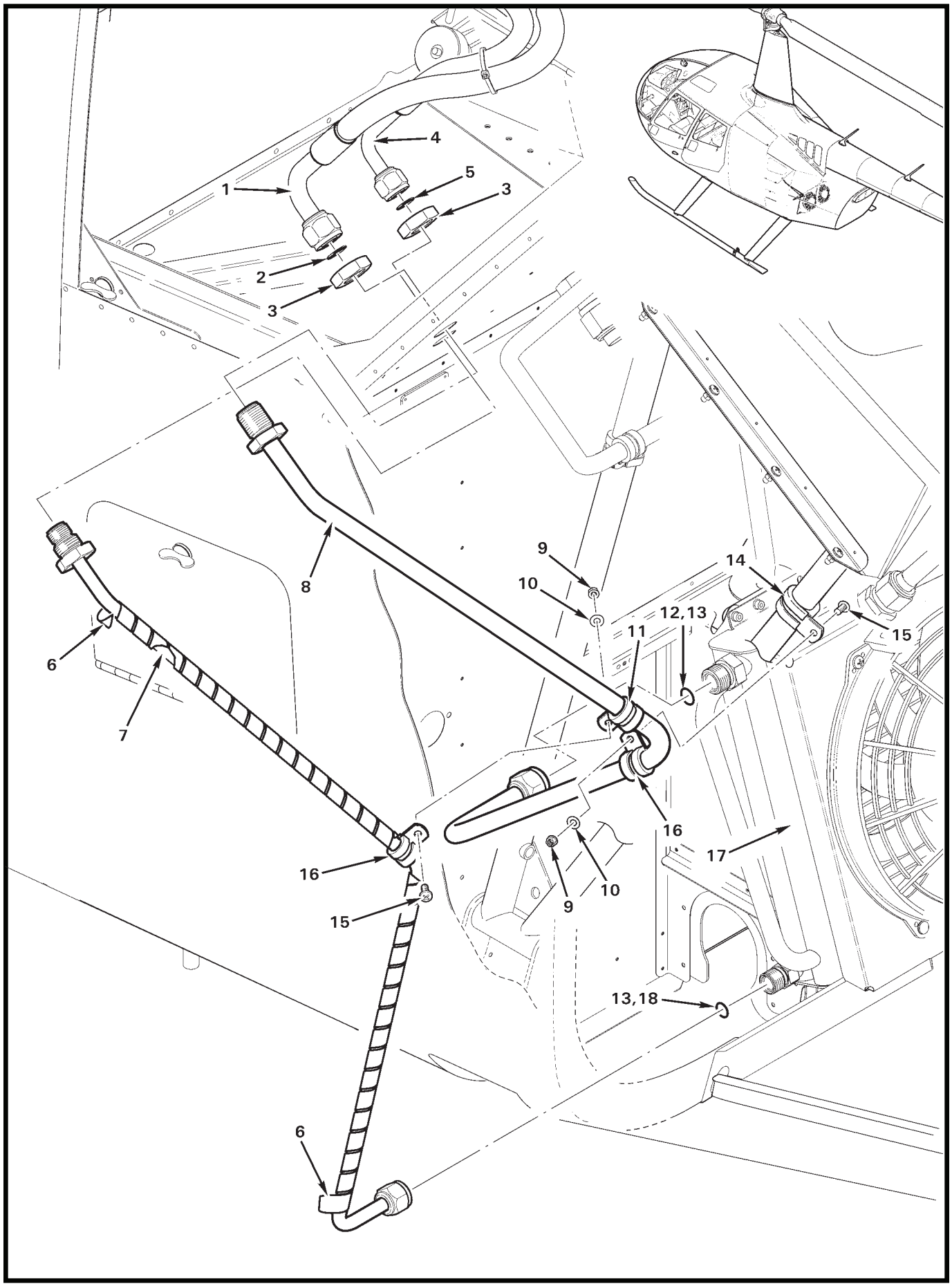
1
2
3
3
4
5
6
6
7
8
9
9
10
10
11
12,13
13,18
14
15
15
16
16
17

FIGURE AND INDEX NUMBER	PART NUMBER	DESCRIPTION	PARTS AVAIL	QTY PER ASSY
		AIR CONDITIONING – LINE ASSEMBLIES		
21-19-1	G794-2	Hose Assembly (Ref)		
2	24608	O-Ring (Ref)		
3	AN924-8D	Nut	X	2
4	G794-3	Hose Assembly (Ref)		
5	24606	O-Ring (Ref)		
6	B161-108	Spirap (high temperature; Orange PTFE [Teflon])	X	A/R
7	G811-1	Line Assembly (high pressure)	X	1
8	G810-1	Line Assembly (low pressure)	X	1
9	MS21042L08	Nut	X	2
10	NAS1149FN816P	Washer	X	2
11	MS21919WCHG8	Clamp	X	1
12	24608	O-Ring (install using item 13)	X	1
13	A257-20	Pag Oil	X	A/R
14	MS21919WCHG12	Clamp (around frame tube)	X	1
15	MS27039C0806	Screw	X	2
16	MS21919WCHG6	Clamp	X	2
17	G783-1	Condenser Assembly (Ref, see Figure 21-7)		
18	24606	O-Ring (install using item 13)	X	1

NOTES

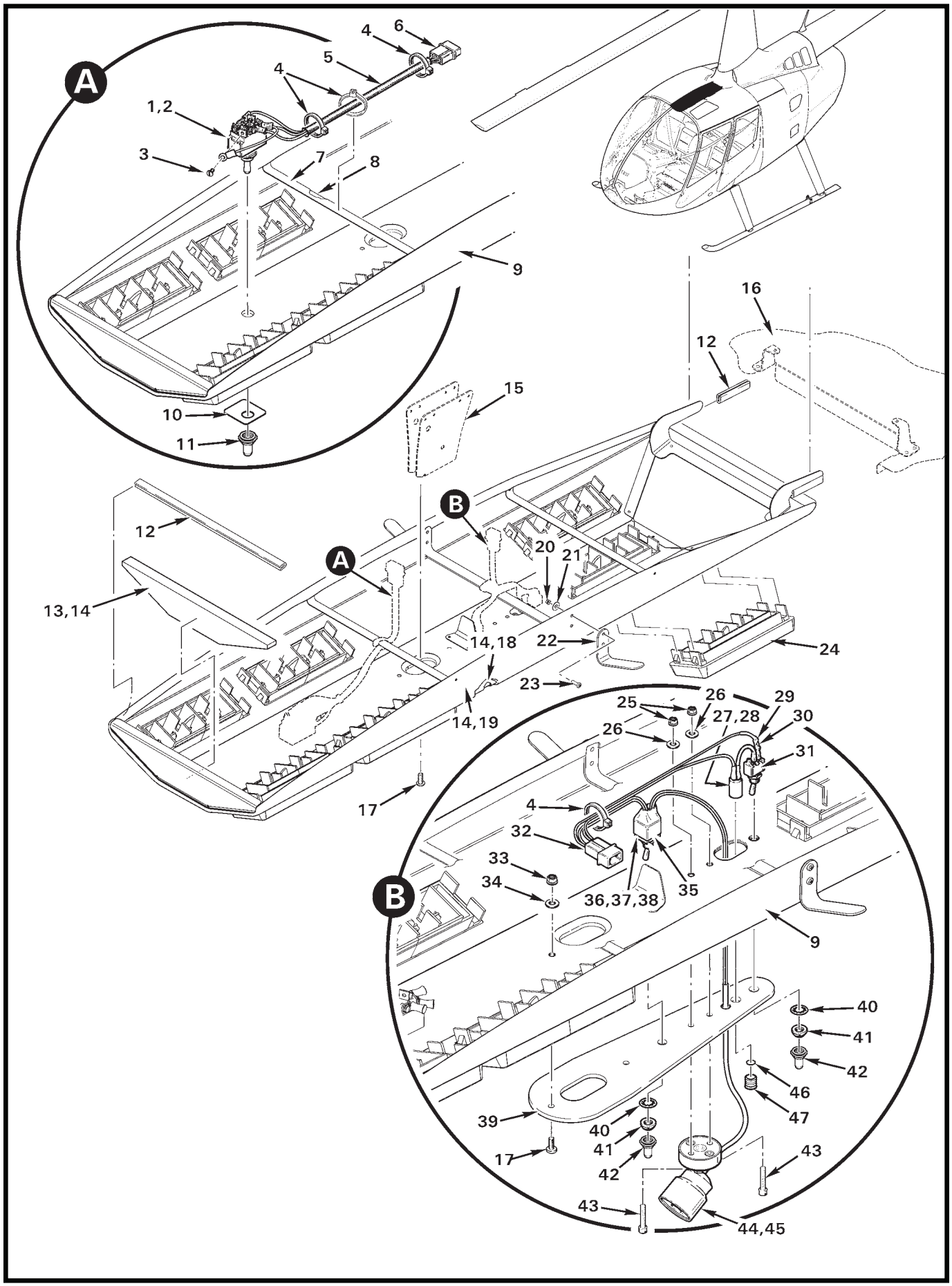
A
4
6
5
4
1,2
3
7
8
9
10
11
16
12
15
B
12
20
21
A
13,14
14,18
22
24
23
14,19
17
25
26
27,28
29
30
26
31
4
32
33
34
36,37,38
35
B
9
40
41
42
46
47
39
40
41
17
42
43
43
44,45

FIGURE AND INDEX NUMBER	PART NUMBER	DESCRIPTION	PARTS AVAIL	QTY PER ASSY
		AIR CONDITIONING – DUCT ASSEMBLY INSTALLATION		
21-21-1	G799-3	Switch Assembly (Incl items 2, 4 [2], 5, 6, and 11)	X	1
2	MS25201-4	Switch (includes lockwasher, nut, and item 3)	X	1
3	—	Screw (Ref)		
4	MS3367-4-9	Ty-Rap	X	4
5	B266-4	Sleeving	X	A/R
6	B263-14	Housing	X	1
	B263-1	Pin	X	3
7	B158-6	Heat Shrink	X	A/R
8	G797-5	Strip (Ref)		
9	G796-1*	Duct Assembly (Incl items 1, 4, 7, 8, 10, 12 thru 14, 17 thru 26, 33, 34, and 43)	X	1
10	D122-4	Plate	X	1
11	C1131/28	Boot	X	1
12	A226-15	Trim	X	A/R
13	D812-8	Insulation (install using item 14)	X	A/R
14	B270-8qt	Adhesive (or B270-14)	X	A/R
15	D122-8	Bracket Assembly (Ref, see Figure 21-25)		
16	G790-1	Duct Assembly (Ref)		
17	MS27039C0807	Screw	X	3
18	B298-102*	Foam (install using item 14)	X	A/R
19	B298-31*	Headliner	X	A/R
	B298-33*	Headliner	X	A/R
	B298-34*	Headliner	X	A/R
20	MS21042L04	Nut	X	2
21	NAS1149FN416P	Washer	X	2
22	A752-1	Angle	X	2
23	MS35206-215	Screw	X	4
24	10.124.63	Louver and Bezel Assembly	X	7
25	MS21042L06	Nut	X	2
26	NAS1149FN616P	Washer	X	2
27	CNX310000X4112	Connector	X	1
28	E1003	LED (not shown)	X	1
29	B158-2	Heat Shrink	X	A/R
30	B0207C1K210F5T	Resistor	X	1

NOTES * Please specify color (blue, grey, or tan).

Continues

FIGURE AND INDEX NUMBER	PART NUMBER	DESCRIPTION	PARTS AVAIL	QTY PER ASSY
		AIR CONDITIONING – DUCT ASSEMBLY INSTALLATION (Cont'd)		
21-21-31	B300-1	Switch (Incl items 40 and 41)	X	1
	B158-2	Heat Shrink (around leads)	X	A/R
32	B263-12	Housing	X	1
	B263-1	Pin	X	2
33	MS21042L08	Nut	X	1
34	NAS1149FN816P	Washer	X	1
35	B158-12	Heat Shrink	X	A/R
36	B300-5	Switch Assembly (Incl items 40 and 41)	X	1
37	B0207C1K650F5T	Resistor (not shown)	X	1
38	B0207C3K400F5T	Resistor (not shown)	X	1
39	D122-6	Plate	X	1
40	B227-3	Lockwasher	X	1
41	B277-4	Dress Nut	X	1
42	N-5030S	Boot	X	1
43	NAS1352-06-10P	Screw	X	2
44	D606-1	Spotlight	X	1
45	D799-8	Light Assembly (Incl items 4, 27 thru 32, 35 thru 39, 42, 44, 46, and 47)	X	1
46	A215-008	O-Ring	X	1
47	CMC321-CTP	Lens	X	1

NOTES

Intentionally Blank

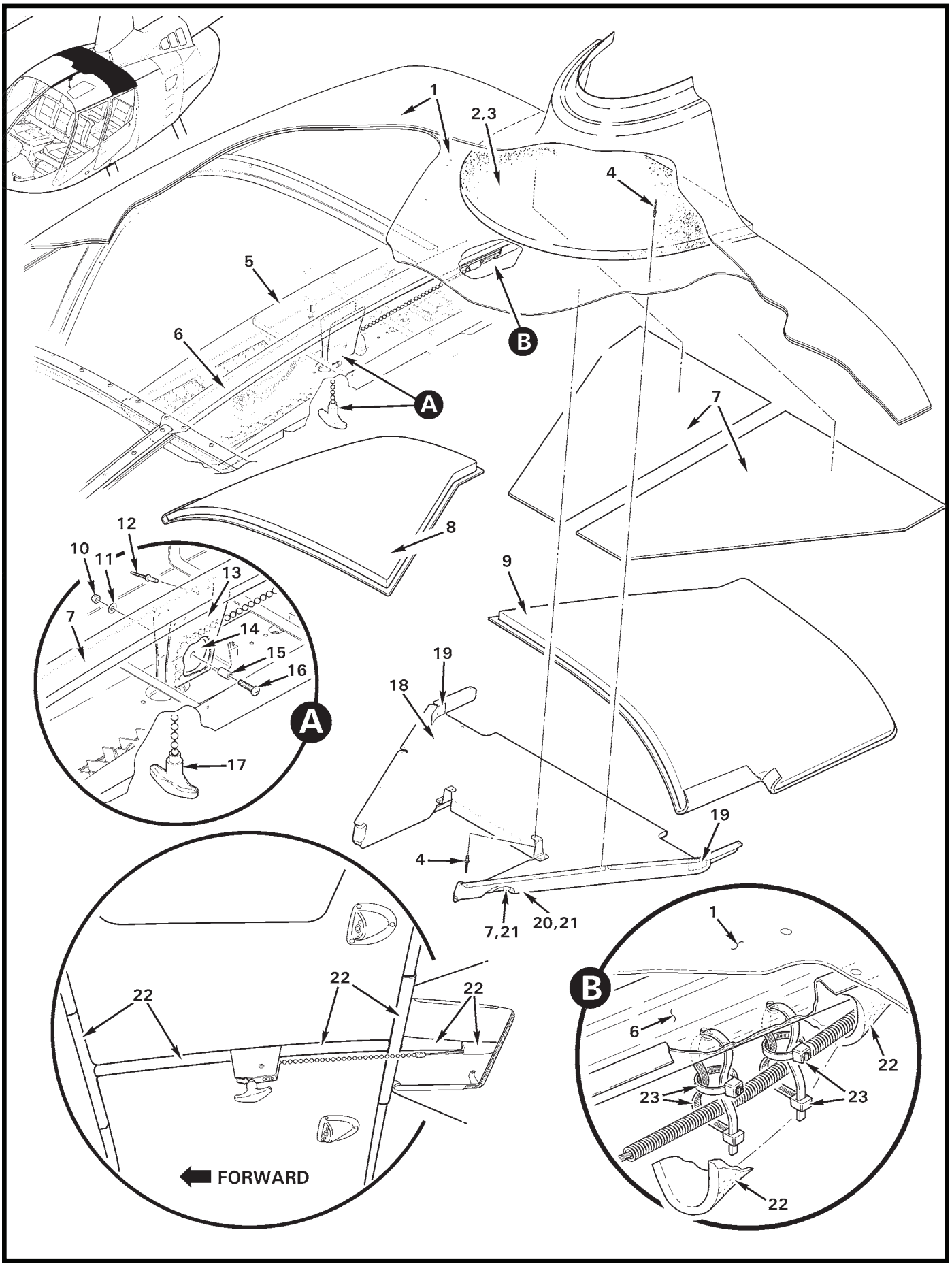
1
2,3
4
5
6
A
B
7
8
9
10
11
12
13
14
15
16
17
18
19
19
4
7,21
20,21
22
22
22
FORWARD
1
B
6
22
23
23
22

FIGURE AND INDEX NUMBER	PART NUMBER	DESCRIPTION	PARTS AVAIL	QTY PER ASSY
		AIR CONDITIONING – FURNISHINGS		
21-25-1	F273-1	Roof (Ref)		
2	B298-104	Foam (install using item 3)	X	A/R
3	B270-8qt	Adhesive	X	A/R
4	NAS9301B-4-03	Rivet	X	16
5	G796-1	Duct Assembly (Ref)		
6	F087-3	Support (Ref)		
7	B298-102	Foam (install using item 21)	X	A/R
8	F003-18	Insulation (RH, install using item 3)	X	1
9	F003-17	Insulation (LH, install using item 3)	X	1
10	MS21042L08	Nut	X	1
11	NAS1149FN816P	Washer	X	1
12	NAS9301B-4-02	Rivet	X	8
13	D122-8	Bracket	X	1
14	BP4100	Pulley	X	1
15	A130-34	Spacer	X	1
16	MS27039C0812	Screw	X	1
17	B033-6	Knob Assembly (Ref)		
18	G790-1*	Duct Assembly (Incl items 7, 19, 20, and 21)	X	1
19	A701-1	Foil Tape (covers corner relief)	X	A/R
20	B298-31*	Headliner (blue)	X	A/R
	B298-33*	Headliner (grey)	X	A/R
	B298-34*	Headliner (tan)	X	A/R
21	B270-14	Adhesive	X	A/R
22	5541K11	Pipe Wrap (item 5 not shown for clarity)	X	A/R
23	MS3367-5-9	Ty-Rap	X	4

NOTES * Please specify color (blue, grey, or tan).

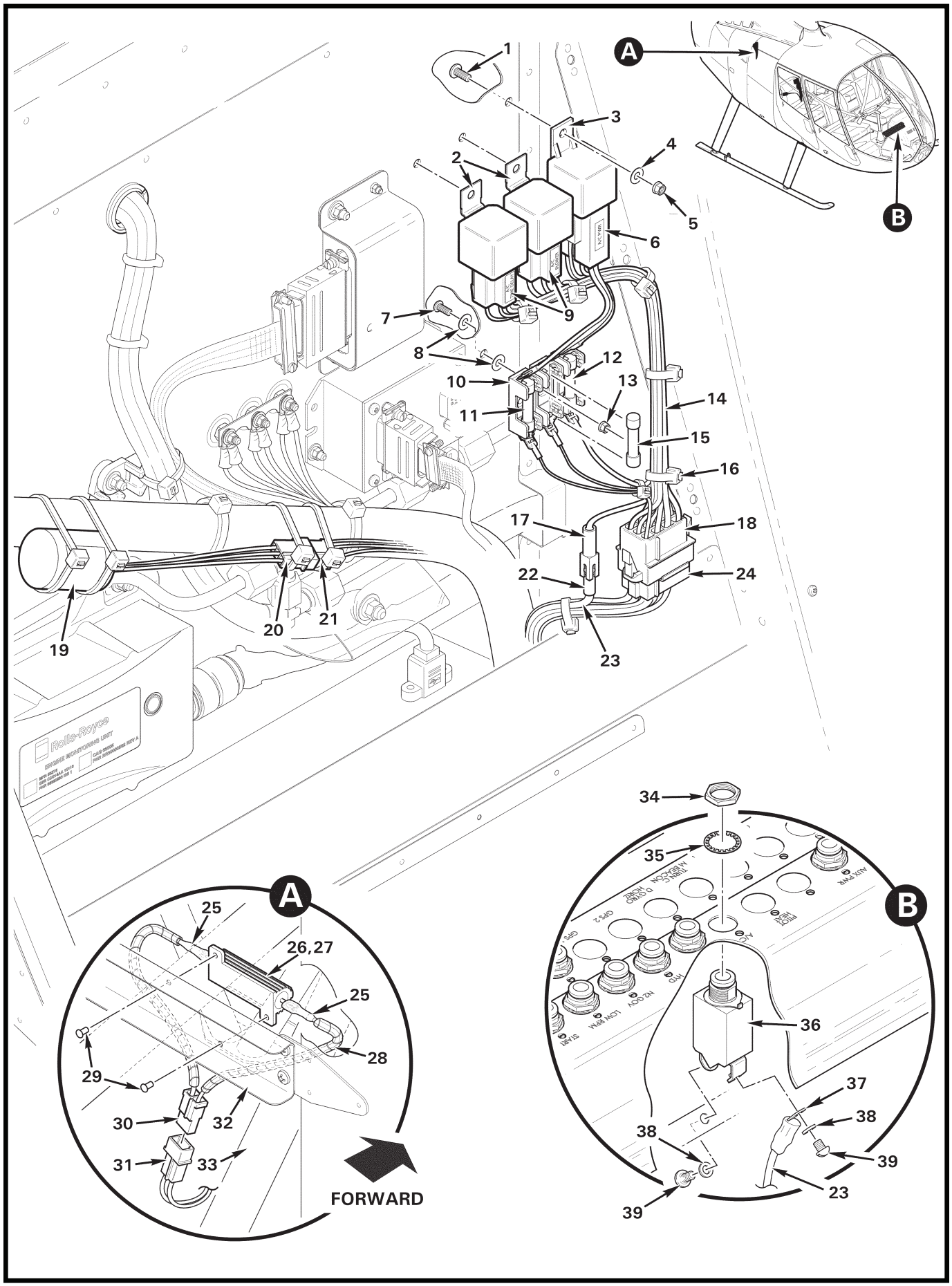
A
B
1
2
3
4
5
6
7
8
9
10
11
12
13
14
15
16
17
18
19
20
21
22
23
24
25
26,27
28
29
30
31
32
33
34
35
36
37
38
39
FORWARD
Rolls-Royce
ENGINE MONITORING UNIT
START
LOW RPM
NO COV
NO
GPS 1
GPS 2
TURN C
M BEACON
D CARGO
HOOK
PROV
TIE
AUX PWR

FIGURE AND INDEX NUMBER	PART NUMBER	DESCRIPTION	PARTS AVAIL	QTY PER ASSY
		AIR CONDITIONING – ELECTRICAL COMPONENTS		
21-27-1	MS27039C0806	Screw	X	3
2	D260-4	Relay (40 amp, 24 volt)	X	2
3	D260-2	Relay (70 amp, 24 volt)	X	1
4	NAS1149FN816P	Washer	X	3
5	MS21042L08	Nut	X	3
6	D260-5	Connector	X	1
7	MS35206-227	Screw	X	1
8	NAS1149FN616P	Washer	X	2
9	D260-6	Connector	X	2
10	D262-3	Fuse Block	X	1
11	D275-205	Fuse (5 amp)	X	1
12	D275-215	Fuse (15 amp)	X	1
13	MS21042L06	Nut	X	1
14	G799-4	Relay Assembly (Incl items 2, 3, 6, 9 thru 12, & 15 thru 18)	X	1
15	D275-210	Fuse (10 amp)	X	1
16	MS3367-4-9	Ty-Rap	X	A/R
17	B263-62	Housing	X	1
	B263-55	Pin	X	1
18	B263-22	Housing	X	1
	B263-1	Pin	X	9
	B263-3	Pin	X	2
19	G655-3	Time Delay Assembly (includes item 20 and wires)	X	1
20	B263-14	Housing	X	1
	B263-1	Pin	X	3
21	B263-15	Housing (Ref)		
22	B263-61	Housing (Ref)		
23	-2297	Wire (Ref)		
24	B263-23	Housing (Ref)		
25	B158-2	Heat Shrink (2 layers each joint)	X	A/R
26	G799-1	Resistor Assembly (Incl items 25, 27, 28, and 30)	X	1
27	RH0506R000FE02	Resistor (6 Ω 50w)	X	1
28	B161-2	Spirap (length as required)	X	2
29	MS20604ML4W2	Rivet	X	2
30	B263-12	Housing	X	1
	B263-1	Pin	X	2

NOTES

Continues

FIGURE AND INDEX NUMBER	PART NUMBER	DESCRIPTION	PARTS AVAIL	QTY PER ASSY
		AIR CONDITIONING – ELECTRICAL COMPONENTS (Cont'd)		
21-27-31	B263-13	Housing (Ref)		
32	G258-4	Strap (Ref)		
33	F020-1	Upper Frame (Ref)		
34	—	Nut	O	1
35	—	Lockwasher	O	1
36	B297-25	Circuit Breaker (25 amp; includes 34, 35, 38 and 39)	X	1
37	B260-11	Terminal (Ref)		
38	—	Lockwasher	O	2
39	—	Screw	O	2

NOTES

Intentionally Blank

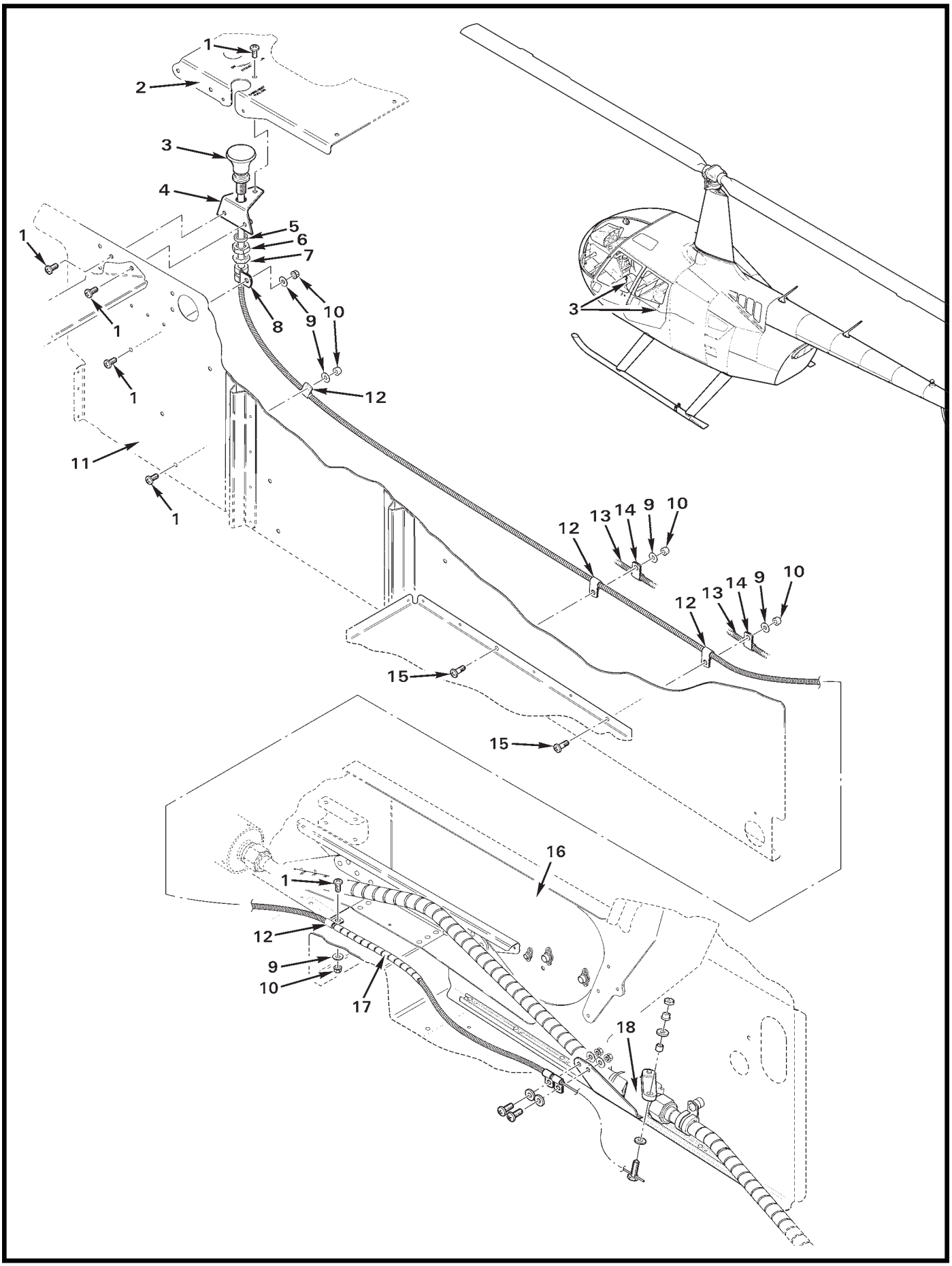
1
2
3
4
5
6
7
8
9
10
11
12
13
14
15
16
17
18

FIGURE AND INDEX NUMBER	PART NUMBER	DESCRIPTION	PARTS AVAIL	QTY PER ASSY
		CABIN HEATER – CONTROL INSTALLATION		
21-31-1	MS27039C0806	Screw	X	6
2	F444-1	Cover – Cyclic (Ref)		
3	A522-14	Control – Heater (Incl item 6)	X	1
4	C518-1	Cover Assembly	X	1
5	A130-18	Spacer	X	1
6	—	Nut	O	1
7	B330-19	Palnut	X	1
8	MS21919WDG4	Clamp	X	1
9	NAS1149FN816P	Washer	X	5
10	MS21042L08	Nut	X	5
11	F293-1	Panel – Keel (forward, LH; Ref)		
12	AN742-3	Clamp	X	4
13	A522-11	Control (Ref; fuel cutoff)		
14	AN742-3	Clamp (Ref; used with item 13)		
15	MS27039C0808	Screw	X	2
16	F292-2	Panel – Keel (aft, RH; Ref)		
17	B161-4	Spirap	X	A/R
18	G019-1	Valve Assembly (Ref; see Figure 21-35)		

NOTES

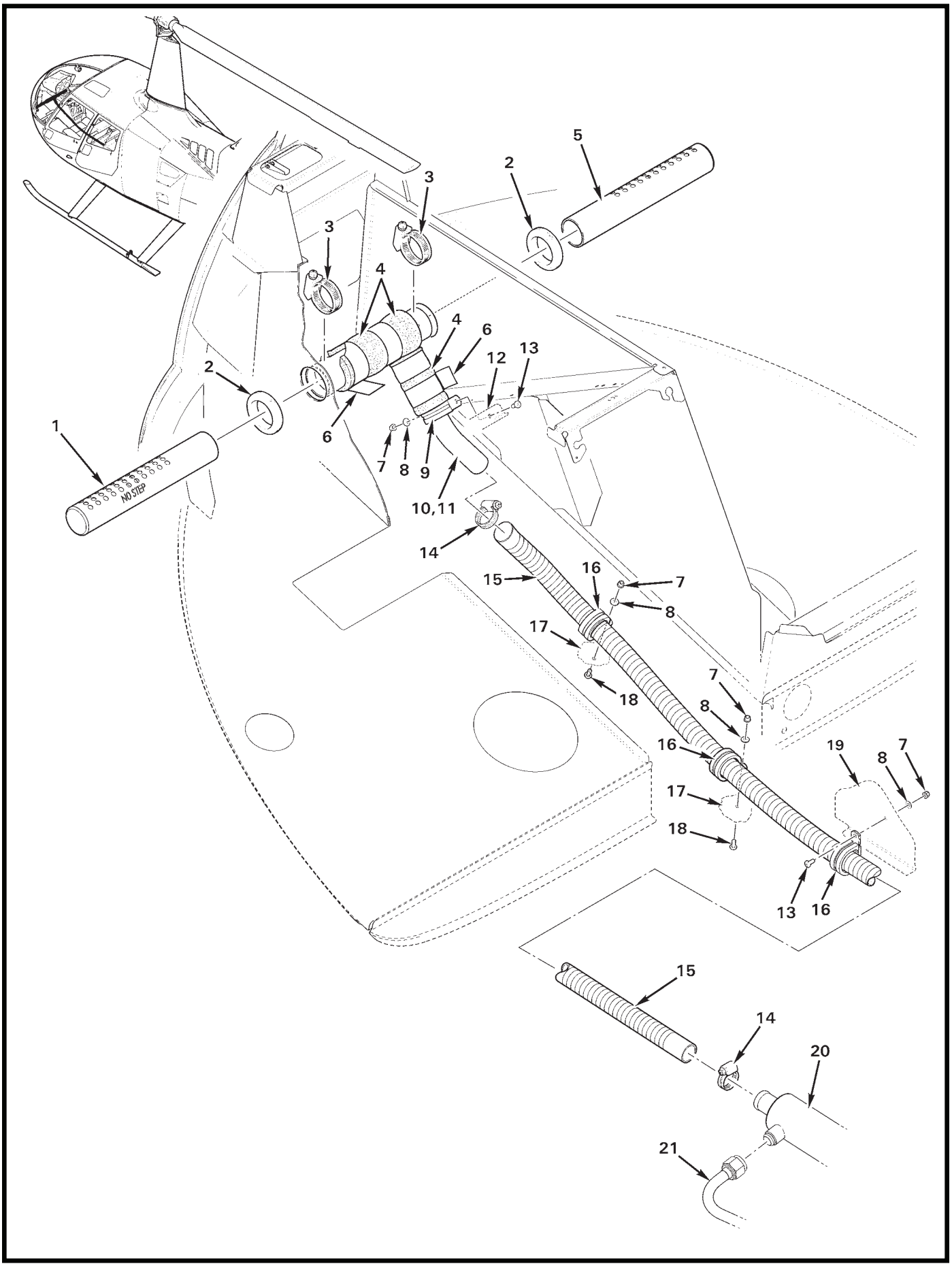
1
2
3
3
4
4
5
6
6
7
8
9
10,11
12
13
14
15
16
7
8
17
18
7
8
16
19
8
7
17
18
13
16
15
14
20
21
NO STEP

FIGURE AND INDEX NUMBER	PART NUMBER	DESCRIPTION	PARTS AVAIL	QTY PER ASSY
		CABIN HEATER – FORWARD COMPONENTS INSTALLATION		
21-33-1	G400-7	Diffuser Assembly (LH)	X	1
2	B401-3	Grommet	X	2
3	B277-024	Clamp	X	2
4	G401-15	Insulation	X	A/R
5	G400-8	Diffuser Assembly (RH)	X	1
6	A701-1	Tape (aluminum foil)	X	A/R
7	MS21042L08	Nut	X	4
8	NAS1149FN816P	Washer	X	4
9	MS21919WCH16	Clamp	X	1
10	G400-3	Can Weldment	X	1
11	G400-1	Tee Assembly (Incl items 4, 6, and 10)	X	1
12	F365-9	Angle (Ref)		
13	MS27039C0806	Screw	X	2
14	B277-12	Clamp	X	2
15	A785-39	Hose	X	1
16	MS21919WCH18	Clamp	X	3
17	F272-1	Chin (Ref)		
18	AN526C832R6	Screw	X	2
19	F293-2	Panel – Keel (forward, RH; Ref)		
20	G400-2*	Muffler Assembly (Ref)		
21	G391-4*	Line Assembly (Ref)		

NOTES * See Figure 21-25.

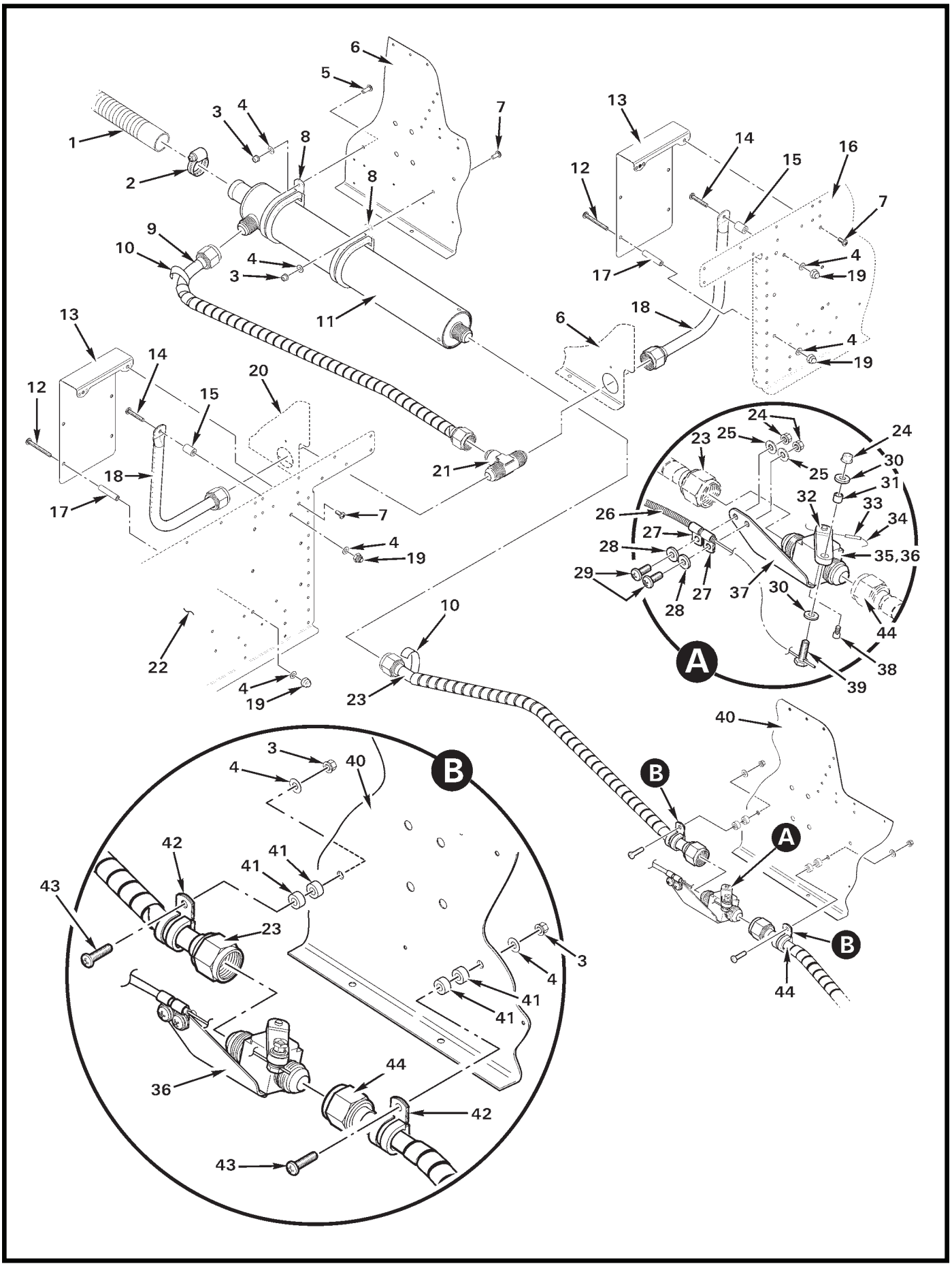
1
2
3
4
5
6
7
8
9
10
11
12
13
14
15
16
17
18
19
20
21
22
23
24
25
26
27
28
29
30
31
32
33
34
35,36
37
38
39
40
41
42
43
44
A
B

FIGURE AND INDEX NUMBER	PART NUMBER	DESCRIPTION	PARTS AVAIL	QTY PER ASSY
		CABIN HEATER – MUFFLER & CONTROL VALVE INSTALLATION		
21-35-1	A785-39	Hose (Ref, see Figure 21-33)		
2	B277-12	Clamp	X	1
3	MS21042L08	Nut	X	4
4	NAS1149FN816P	Washer	X	14
5	MS27039C0807	Screw	X	1
6	F293-2	Panel – Keel (forward, RH; Ref)		
7	MS27039C0806	Screw	X	3
8	MS21919WCH18	Clamp	X	2
9	G391-4	Line Assembly	X	1
10	B161-108	Spirap (high temperature; Orange PTFE [Teflon])	X	A/R
11	G400-2	Muffler Assembly	X	1
12	MS27039C0824	Screw	X	8
13	G394-1	Guard	X	2
14	MS27039C0816	Screw	X	2
15	A130-38	Spacer	X	2
16	F296-2	Bulkhead – RH (Ref)		
17	C130-19	Spacer	X	8
18	G392-3	Diffuser Assembly	X	2
19	B340-4	Nut	X	10
20	F293-1	Panel – LH (Ref)		
21	AN824-8D	Tee	X	1
22	F296-1	Bulkhead – LH (Ref)		
23	G391-2	Line Assembly	X	1
24	MS21042L3	Nut	X	3
25	NAS1149F0332P	Washer	X	2
26	A522-14	Control – Heater (Ref, see Figure 21-31)		
27	AN742-3	Clamp	X	2
28	NAS1149F0363P	Washer	X	2
29	MS27039C1-08	Screw	X	2
30	NAS1149E0363R	Washer	X	2
31	A130-48	Spacer	X	1
32	F621-1	Arm	X	1
33	MS16562-15	Spring Pin	X	1
34	MS20995C32	0.032 in. dia Safety Wire	X	A/R

NOTES

Continues

FIGURE AND INDEX NUMBER	PART NUMBER	DESCRIPTION	PARTS AVAIL	QTY PER ASSY
		CABIN HEATER – MUFFLER & CONTROL VALVE INSTALLATION (Cont'd)		
21-35-35	G019-1	Valve Assembly – Cabin Heat (incl items 24, 25, 27 thru 34, and 36 thru 39)	X	1
36	F620-1	Valve	X	1
37	F621-2	Bracket	X	1
38	NAS1352-04-4P	Screw	X	4
39	A462-4	Fitting	X	1
40	F292-2	Panel – Keel (aft, RH; Ref)		
41	A130-21	Spacer	X	4
42	MS21919WCH8	Clamp	X	2
43	MS27039C0812	Screw	X	2
44	G391-5	Line Assembly (Ref, see Figure 21-39)		

NOTES

Intentionally Blank

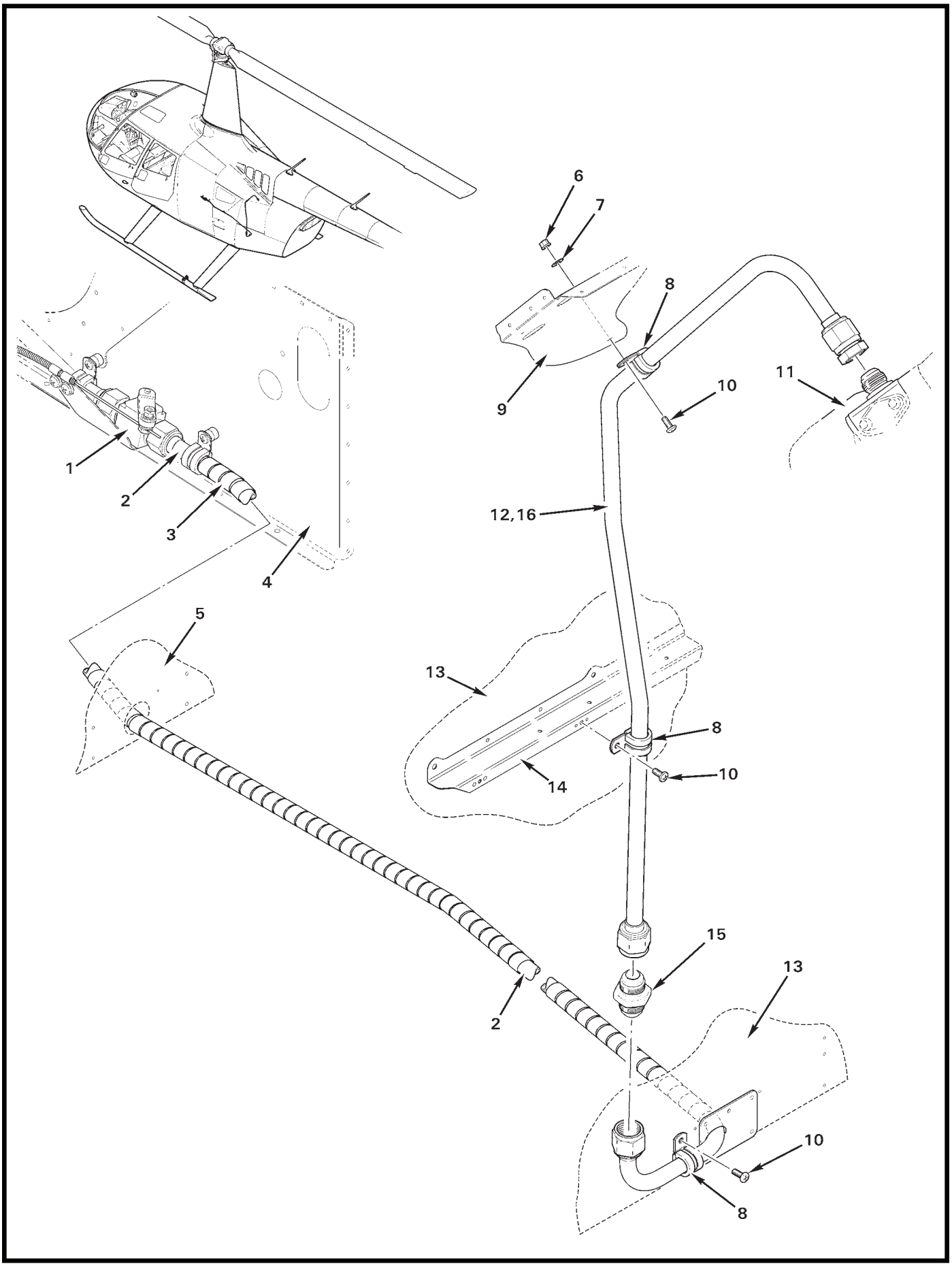
6
7
8
9
10
11
1
2
3
4
12,16
5
13
8
14
10
15
13
2
10
8

FIGURE AND INDEX NUMBER	PART NUMBER	DESCRIPTION	PARTS AVAIL	QTY PER ASSY
		CABIN HEATER – AFT COMPONENTS INSTALLATION		
21-39-1	G019-1	Valve Assembly (Ref, see Figure 21-35)		
2	G391-5	Line Assembly	X	1
3	B161-108	Spirap (high temperature; Orange PTFE [Teflon])	X	A/R
4	F292-2	Panel – Keel (aft, RH; Ref)		
5	G259-1	Panel (Bulkhead; Ref)		
6	MS21042L08	Nut	X	1
7	NAS1149FN816P	Washer	X	1
8	MS21919WCH8	Clamp	X	3
9	F234-1	Firewall (Ref)		
10	MS27039C0806	Screw	X	3
11	F145-1	Engine (Ref)		
12	G391-1*	Line Assembly	X	1
13	F233-1	Firewall (Ref)		
14	F384-2	Stiffener (Ref)		
15	G396-1	Union	X	1
16	A257-9	Anti-Seize	X	A/R

NOTES * Apply item 16 to upper nut threads only.

Intentionally Blank

CHAPTER 22

AUTOPILOT

Figure	*Title*	*Page*
22-1	Garmin FCS – Servo Assembly Installation (Roll)	22.0
22-5	Garmin FCS – Servo Assembly Installation (Pitch)	22.4
22-7	Garmin FCS – Servo Assembly Installation (Yaw)	22.6
22-11	Garmin FCS – Controller and Cyclic Control System	22.10
22-13	Garmin FCS – Components Installation	22.12
22-17	HeliSAS – (Pitch) Servo Assembly and Components Installation	22.16
22-21	HeliSAS – (Roll) Servo Assembly Installation	22.20
22-23	HeliSAS – Flight Control Computer Installation	22.22

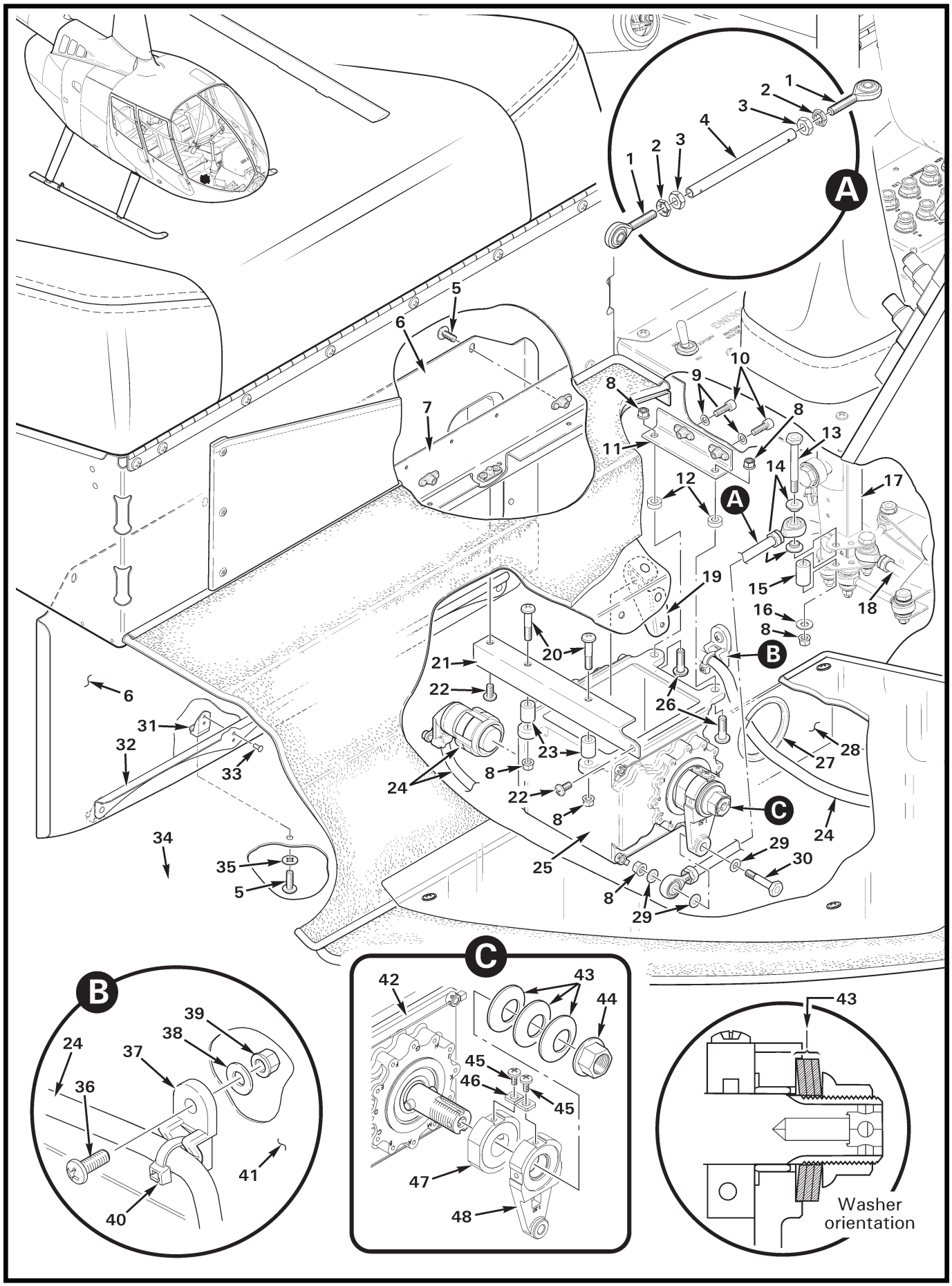

FIGURE 22-1 GARMIN FCS – SERVO ASSEMBLY INSTALLATION (ROLL)

FIGURE AND INDEX NUMBER	PART NUMBER	DESCRIPTION	PARTS AVAIL	QTY PER ASSY
		GARMIN FCS – SERVO ASSEMBLY INSTALLATION (ROLL)		
22-1-1	A127-3	Rod End	X	2
2	B330-7	Stamped Nut	X	2
3	AN315-3R	Nut	X	2
4	A336-7	Tube	X	1
5	B526-6	Screw	X	8
6	G702-14	Cover Assembly (incl items 31 thru 33)	X	1
7	F362-5	Beam Assembly (ref)		
8	D210-3	Nut	X	6
9	NAS620-8L	Washer	X	2
10	NAS1352-08-8P	Screw	X	2
11	G353-3	Angle Assembly	X	1
12	A130-20	Spacer	X	2
13	NAS6603-20	Bolt	X	1
14	A341-1	Spacer	X	2
15	C130-51	Spacer	X	1
16	NAS1149F0332P	Washer	X	1
17	C069	Cyclic Control Assembly (ref)		
18	A336-8	Tube (ref; see Figure 22-5)		
19	G353-9	Bracket (ref)		
20	MS27039C1-15	Screw	X	2
21	G353-2	Angle	X	1
22	MS27039C0805	Screw	X	2
23	A130-35	Spacer	X	2
24	G323-1	Harness Assembly (2-axis)	O	1
	G323-2	Harness Assembly (3-axis)	O	1
25	G357-1	Servo Assembly (Roll; includes items 42 thru 48.)	X	1
26	MS27039C1-10	Screw	X	2
27	NAS557-28A	Grommet	X	1
28	G230-2	Bulkhead (ref)		
29	NAS620-10L	Washer	X	3
30	NAS6603-11	Bolt	X	1
31	MF6000-08	Nutplate	X	4
32	G702-12	Stiffener	X	1
33	MS20470AD3	Rivet	X	8
34	F272-1	Chin (ref)		

NOTES

Continues

FIGURE AND INDEX NUMBER	PART NUMBER	DESCRIPTION	PARTS AVAIL	QTY PER ASSY
		GARMIN FCS – SERVO ASSEMBLY INSTALLATION (ROLL; Cont'd)		
22-1-35	B527-08	Washer	X	4
36	MS27039C0807	Screw	X	1
37	D268-4	Support	X	1
38	NAS1149FN816P	Washer	X	1
39	MS21042L08	Nut	X	1
40	MS3367-5-9	Ty-Rap	X	1
41	F293-2	Panel – Keel (forward, RH; ref)		
42	011-03367-13*	Servo	O	1
43	234-10010-07*	Washer (belleville; convex side towards nut)	O	3
44	D210-8**	Nut	X	1
45	211-A0020-26*	Screw	O	2
46	117-01067-05*	Shear Fuse	O	1
47	117-01065-00*	Output Hub	O	1
48	117-01080-12*	Output Arm	O	1

NOTES * Garmin part number.

** Install per R66 MM § 22-12-4.

Intentionally Blank

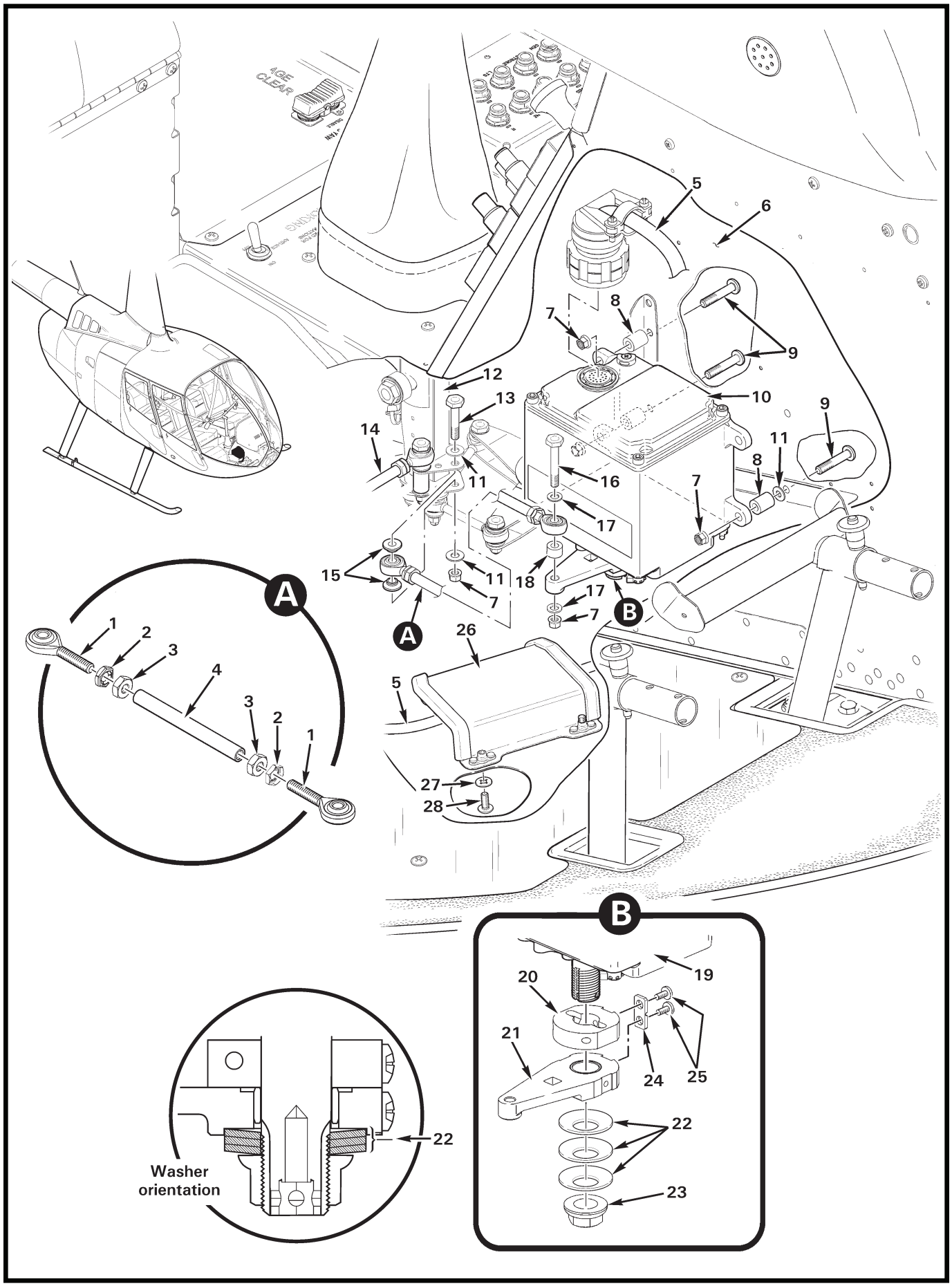

FIGURE 22-5 GARMIN FCS – SERVO ASSEMBLY INSTALLATION (PITCH)

FIGURE AND INDEX NUMBER	PART NUMBER	DESCRIPTION	PARTS AVAIL	QTY PER ASSY
		GARMIN FCS – SERVO ASSEMBLY INSTALLATION (PITCH)		
22-5-1	A127-3	Rod End	X	2
2	B330-7	Stamped Nut	X	2
3	AN315-3R	Nut	X	2
4	A336-8	Tube	X	1
5	G323-1	Harness Assembly (2-axis)	O	1
	G323-2	Harness Assembly (3-axis)	O	1
6	F033-1	Console Assembly – Lower (ref)		
7	D210-3	Nut	X	5
8	A130-35	Spacer	X	3
9	MS27039C1-16	Screw	X	3
10	G357-2	Servo Assembly (Pitch; includes items 19 thru 25.)	X	1
11	NAS1149F0332P	Washer	X	3
12	C069	Cyclic Control Assembly (ref)		
13	NAS6603-11	Bolt	X	1
14	A336-7	Tube (ref; see Figure 22-1.)		
15	A341-1	Spacer	X	2
16	NAS6603-15	Bolt	X	1
17	NAS620-10L	Washer	X	2
18	C130-64	Spacer	X	1
19	011-03367-13*	Servo	O	1
20	117-01065-00*	Output Hub	O	1
21	117-01080-14*	Output Arm	O	1
22	234-10010-07*	Washer (belleville; convex side towards nut)	O	3
23	D210-8**	Nut	X	1
24	117-01067-05*	Shear Fuse	O	1
25	211-A0020-26	Screw	X	2
26	D555-4	Shield Assembly	X	1
27	B527-08	Washer	X	2
28	B526-6	Screw	X	2

NOTES * Garmin part number.

** Install per R66 MM § 22-12-4.

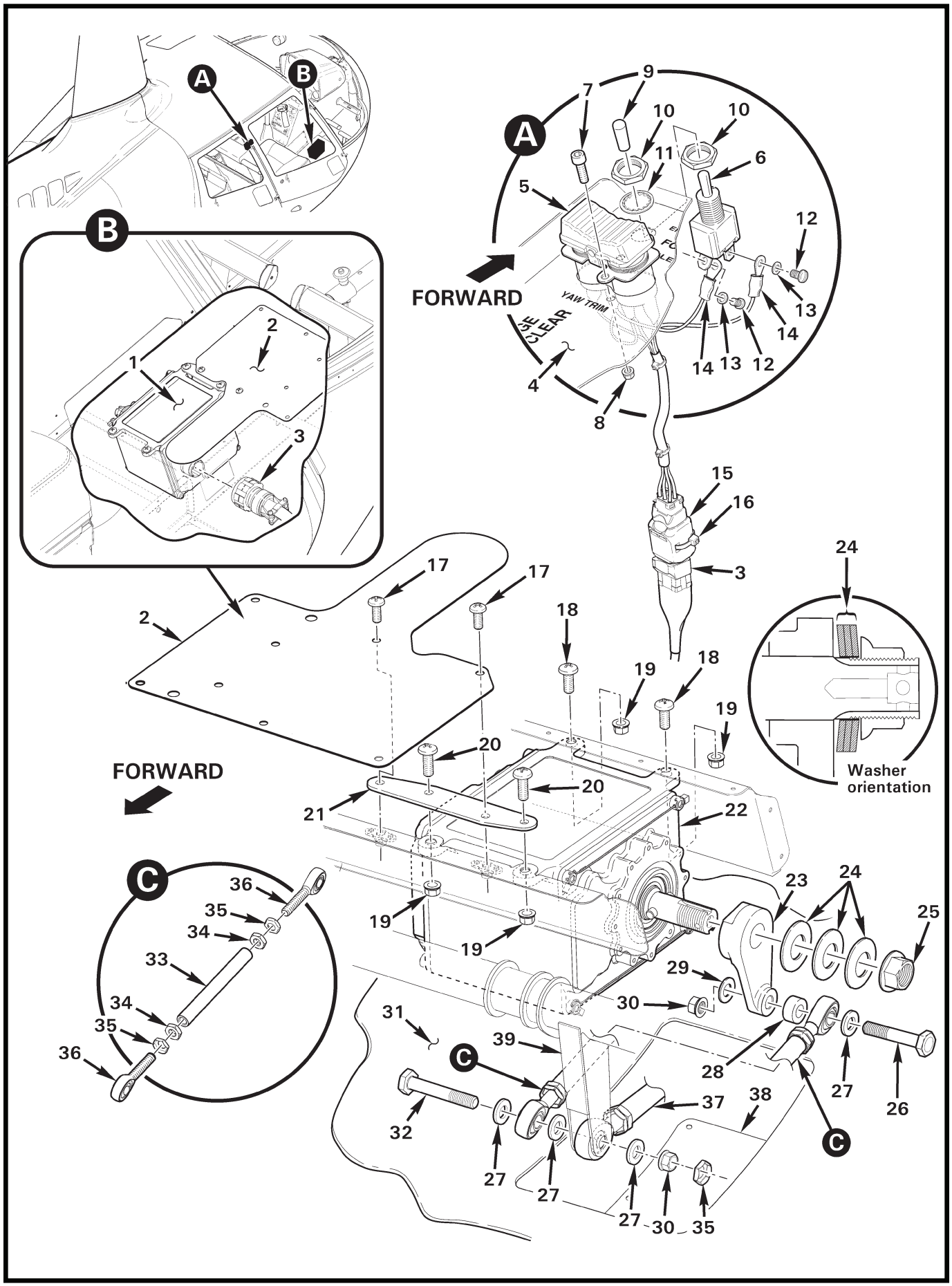
A
B
C
FORWARD
YAW TRIM
CLEAR
Washer orientation
1
2
3
4
5
6
7
8
9
10
11
12
13
14
15
16
17
18
19
20
21
22
23
24
25
26
27
28
29
30
31
32
33
34
35
36
37
38
39

FIGURE AND INDEX NUMBER	PART NUMBER	DESCRIPTION	PARTS AVAIL	QTY PER ASSY
		GARMIN FCS – SERVO ASSEMBLY INSTALLATION (YAW)		
22-7-1	G357-3	Servo Assembly (Yaw; includes items 22 thru 25.)	X	1
2	A412-4	Cover (ref; see Figure 67-31)		
3	G323-2	Harness Assembly (3-axis)	O	1
4	F445-5	Cover Assembly (FCS)	X	1
	F445-7	Cover Assembly (FCS with pop-out floats equipped)	X	1
5	B049-13	Switch Assembly (install with green heat shrink inboard; includes items 14 and 15)	X	1
6	B300-4	Switch (incl items 10 thru 13)	X	1
7	NAS1352-04-6	Screw	X	2
8	MS21042L04	Nut	X	2
9	AT406B	Cap	X	1
10	—	Nut	O	2
11	—	Lock washer	O	1
12	—	Screw	O	2
13	—	Washer	O	2
14	B260-2	Terminal	X	2
15	D269-5	Plug (includes [6] M39029/58-360 pins)	X	1
16	MS3367-4-9	Ty-Rap (locks connector)	X	1
17	MS27039C0806	Screw	X	2
18	MS27039C1-07	Screw	X	2
19	D210-3	Nut	X	4
20	MS27039C1-08	Screw	X	2
21	G353-4	Plate	X	1
22	011-03367-00*	Servo	O	1
23	117-01229-02*	Output Arm	O	1
24	234-10010-07*	Washer	O	3
25	D210-8**	Nut	X	1
26	NAS6604-15	Bolt	X	1
27	NAS1149F0463P	Washer	X	4
28	C130-15	Spacer	X	1
29	NAS1149F0432P	Washer	X	1
30	D210-4	Nut	X	2
31	F272-1	Chin (ref)		
32	NAS6604-16	Bolt	X	1
33	G353-5	Tube	X	1

NOTES * Garmin part number.

** Install per R66 MM § 22-12-4.

Continues

FIGURE AND INDEX NUMBER	PART NUMBER	DESCRIPTION	PARTS AVAIL	QTY PER ASSY
		GARMIN FCS – SERVO ASSEMBLY INSTALLATION (YAW; Cont'd)		
22-7-34	AN316-4R	Nut	X	2
35	B330-13	Stamped Nut	X	3
36	A127-4	Rod End	X	2
37	C343-11	Tube Assembly (ref; see Figure 67-29)		
38	C795-1	Cover (ref; see Figure 6-9)		
39	D755-4	Pedal Assembly (right foot, ref; see Figure 67-29)		

NOTES

Intentionally Blank

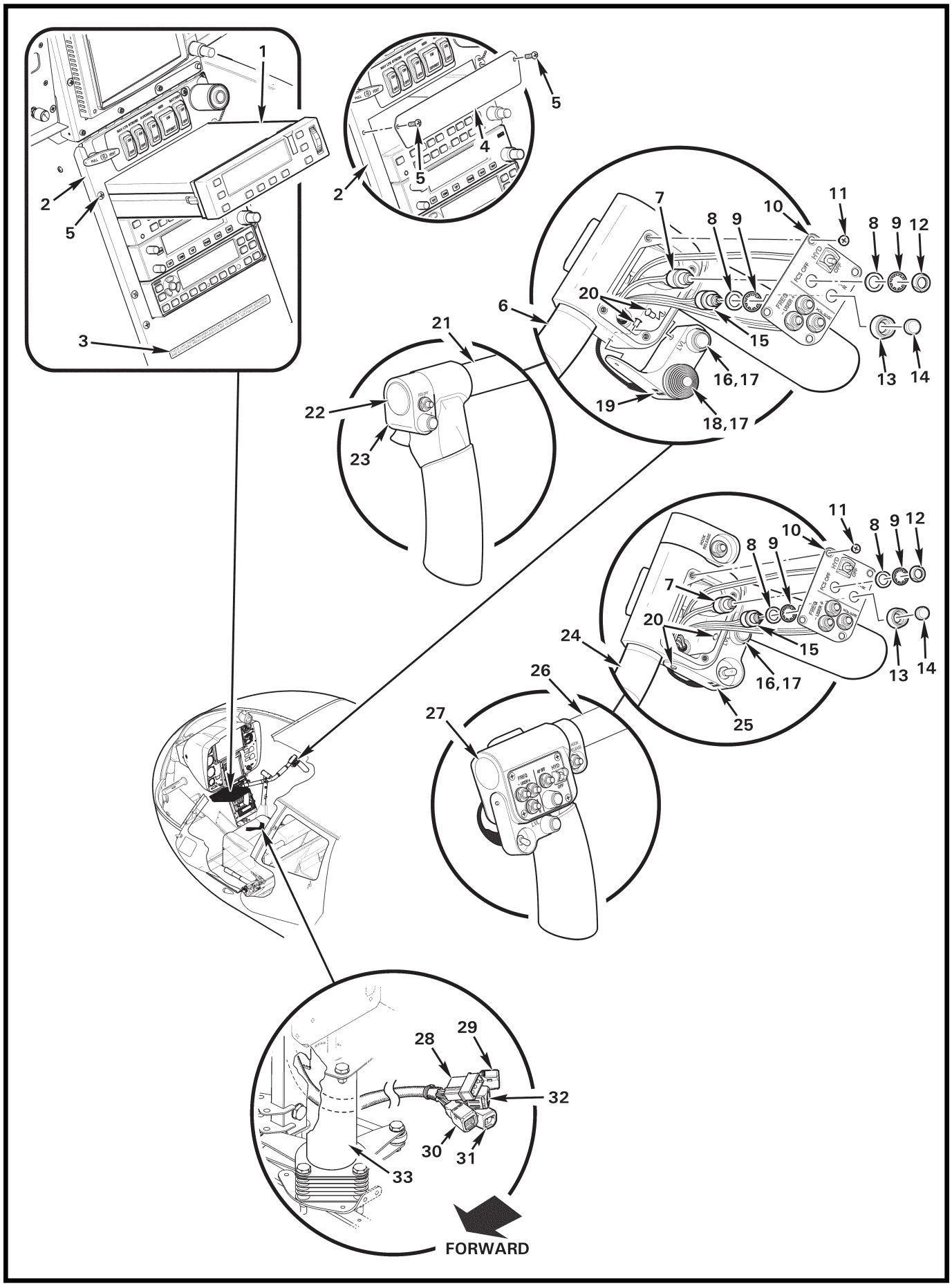

FIGURE 22-11 GARMIN FCS – CONTROLLER AND CYCLIC CONTROL SYSTEM

FIGURE AND INDEX NUMBER	PART NUMBER	DESCRIPTION	PARTS AVAIL	QTY PER ASSY
		GARMIN FCS – CONTROLLER AND CYCLIC CONTROL SYSTEM		
22-11-1	GMC 605H*	Controller	X	1
2	F640	Face Assembly (ref)		
3	G682-49	Decal – "CYCLIC LIMIT CUEING..."	X	1
4	F640-102	Cover (FCS – Provision equipment)	O	1
5	MS27039C0806	Screw	X	2
6	C058-22	Grip Assembly – Cyclic (FCS)	O	1
7	B227-13	Switch Assembly (incl items 8, 9, and 12)	X	2
8	94773A770	Washer	X	A/R
9	B227-3	Lockwasher	X	A/R
10	C214-28	Plate	X	A/R
11	MS24693-S1	Screw	X	A/R
12	B227-4	Dress Nut	X	2
13	D443-8	Dress Nut	O	2
14	401204-9	Cap	O	2
15	B227-10	Switch Assembly (incl items 8, 9, 13, and 14)	X	2
16	B227-12	Switch (install using item 17)	X	1
17	B270-9	Adhesive	X	A/R
18	T4-TMC3332	Switch (install using item 17)	X	1
19	G136-9	Housing	X	1
20	MS20470AD3	Rivet	X	A/R
21	C058-23	Grip Assembly – Cyclic (Copilot, FCS)	O	1
22	B209-8	Plug	X	1
23	G136-10	Housing	X	1
24	C058-24	Grip Assembly – Cyclic (Cargo Hook w/ FCS)	O	1
25	G136-11	Housing	X	2
26	C058-25	Grip Assembly – Cyclic (Copilot, Cargo Hook w/ FCS)	O	1
27	2703	Plug	X	1
28	B263-14	Housing (ref; see Figure 67-1)		
29	D269-11	Plug (ref; see Figure 67-1)		
30	D269-9	Plug (ref; see Figure 67-1)		
31	D269-5	Plug (includes [6] M39023/58-360 pins)	X	1
32	D269-8	Receptacle (includes [6] M39023/58-354 sockets)	X	1
33	C048-1	Cyclic Friction Assembly (ref; see Figure 67-19)		

NOTES * Garmin part number.

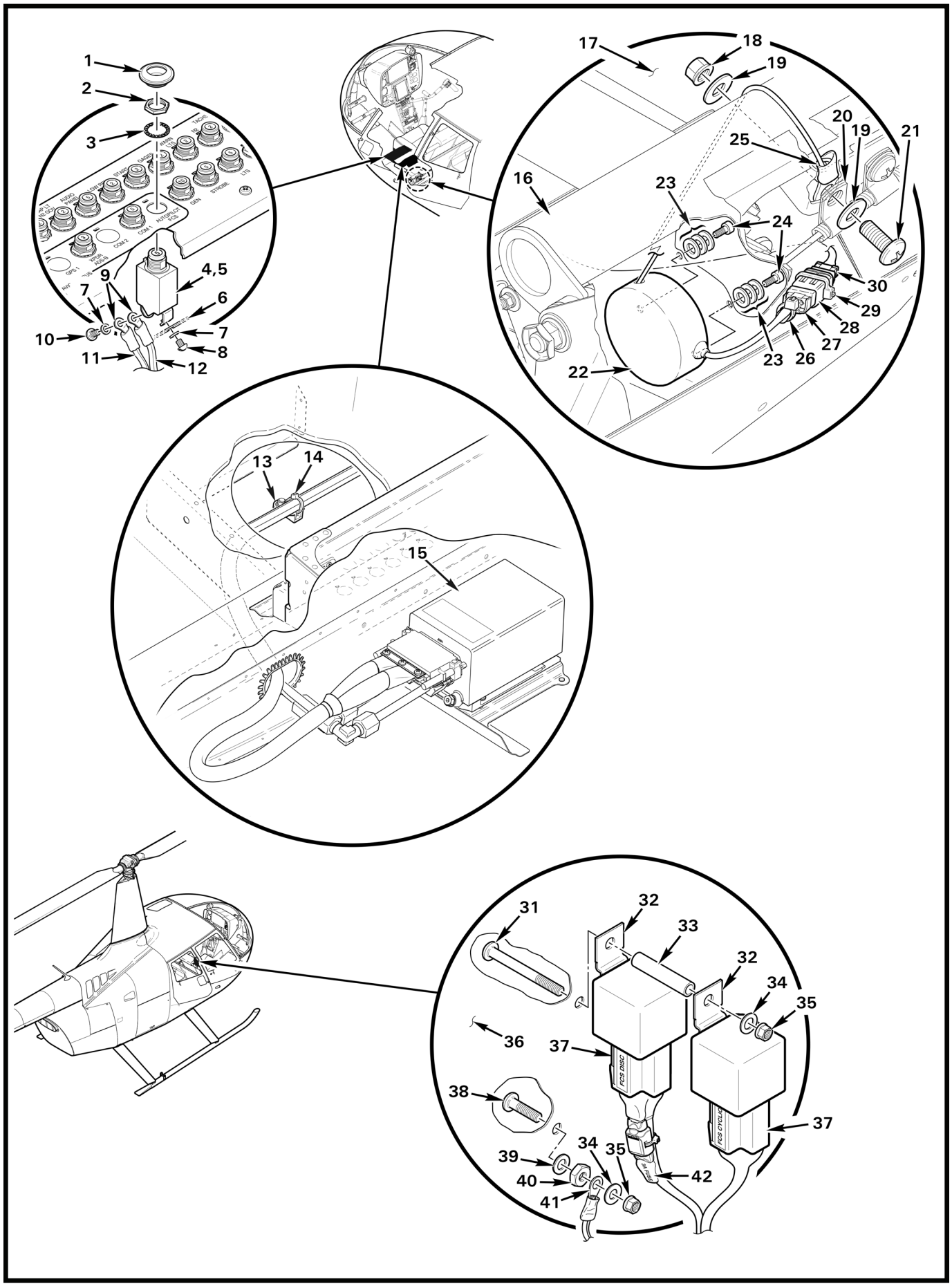
1
2
3
4,5
6
7
8
9
10
11
12
13
14
15
16
17
18
19
20
21
22
23
24
25
26
27
28
29
30
31
32
33
34
35
36
37
38
39
40
41
42
FCS DISC
FCS CYCLIC

FIGURE AND INDEX NUMBER	PART NUMBER	DESCRIPTION	PARTS AVAIL	QTY PER ASSY
		GARMIN FCS – COMPONENTS INSTALLATION		
22-13-1	D271-1	Cap	X	1
2	—	Nut	O	1
3	—	Lockwasher	O	1
4	MS26574-5	Circuit Breaker (5-amp; do not substitute)	O	1
5	B297-5*	Circuit Breaker (incl items 2 thru 4, 7, and 8.)	X	1
6	A448	Bus Bar (ref)		
7	—	Washer	O	2
8	—	Screw	O	1
9	B260-2	Terminal (ref)		
10	MS35206-226	Screw	X	1
11	G323-2931	Wires (ref)		
	G323-2940	Wires (ref)		
12	G323-2945	Wires (ref)		
	G323-2949	Wires (ref)		
13	D268-4	Support	X	1
14	MS3367-4-9	Ty-Rap	X	1
15	GSU 75H**	ADAHRS (ref; see Figure 97-11B)		
16	F758-1	Stick Assembly – Collective (ref; see Figure 67-21.)		
17	F297-1	LH forward seat (ref)		
18	D210-3	Nut	X	1
19	NAS1149F0332P	Washer	X	2
20	AN742-3	Clamp (ref; see Figure 67-21)		
21	MS27039C1-07	Screw	X	1
22	G356-1	Transducer Assembly (incl items 24 thru 28; discard [2] washers supplied with assembly and replace using item 23)	X	1
23	NAS1149FN232P	Washer	X	6
24	—	Screw	O	2
25	B260-4	Terminal	X	1
26	MS3367-4-9	Ty-Rap	X	1
27	D269-21	Backshell	X	1
28	D269-1	Plug (includes [3] M39029/58-360 pins)	X	1
29	MS3367-4-9	Ty-Rap (locks connector)	X	1
30	D269-2	Receptacle (includes [3] M39029/57-354 sockets; ref)		
31	MS27039C0825	Screw	X	1

NOTES * Revision G or subsequent; circuit breaker is made from MS26574-5 circuit breaker.

** Garmin part number.

Continues

FIGURE AND INDEX NUMBER	PART NUMBER	DESCRIPTION	PARTS AVAIL	QTY PER ASSY
		GARMIN – COMPONENTS INSTALLATION (Cont'd)		
22-13-32	D260-4	Relay	X	2
33	C130-19	Spacer	X	1
34	NAS1149FN816P	Washer	X	2
35	MS21042L08	Nut	X	2
36	F293-1	Panel – Keel (forward, LH; ref)		
37	D260-6	Connector	X	2
	B262-6	Receptacle	X	A/R
38	B567-43	Screw	X	1
39	NAS1149DN832H	Washer	X	1
40	B301-8	Nut	X	1
41	B260-3	Terminal	X	1
	G323-2934	Wire (ref)		
	G323-2936	Wire (ref)		
42	B304-25	Fuse Assembly (3 amp)	X	1

NOTES

Intentionally Blank

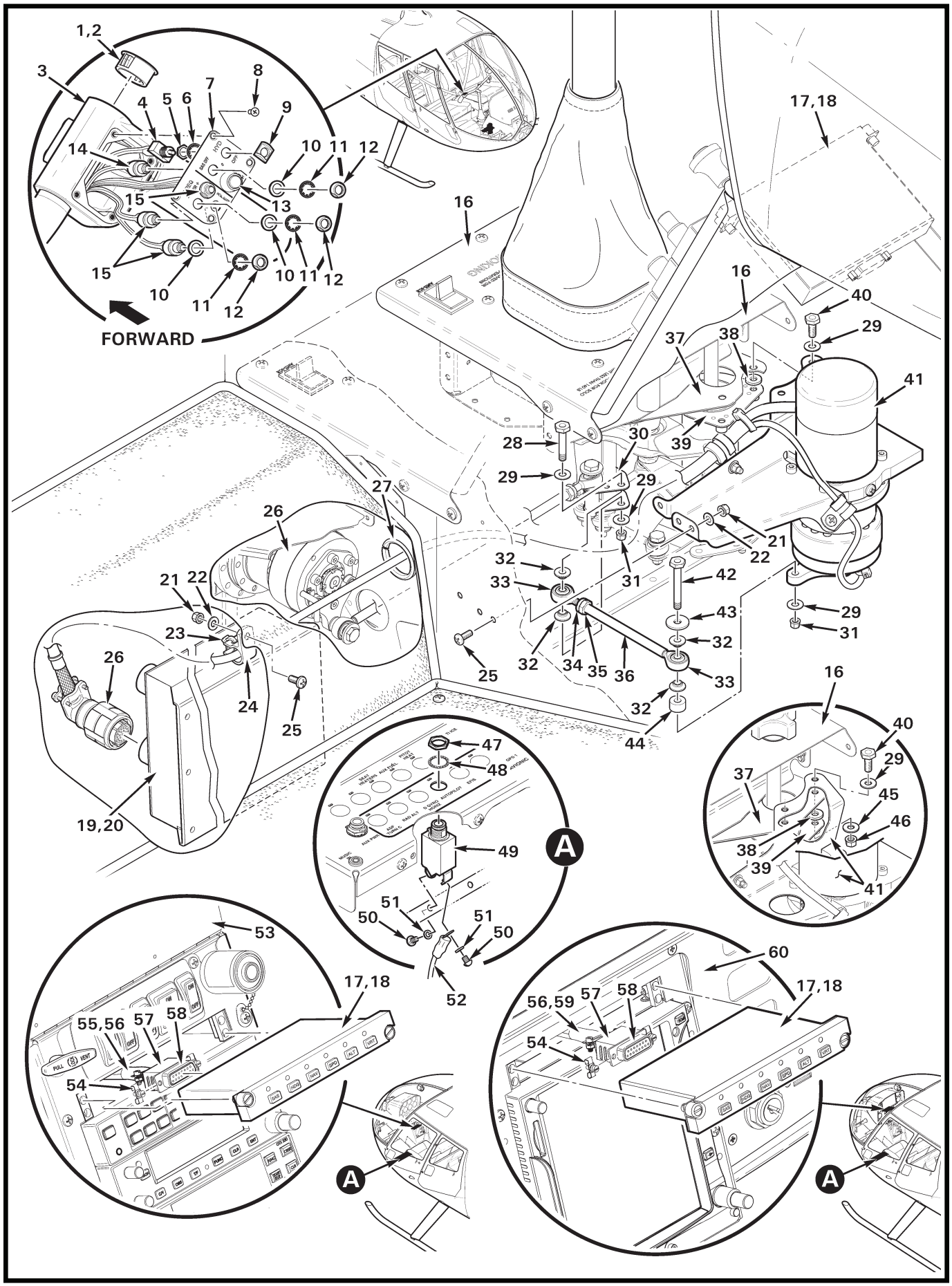

FIGURE 22-17 HELISAS – (PITCH) SERVO ASSEMBLY AND COMPONENTS INSTALLATION

FIGURE AND INDEX NUMBER	PART NUMBER	DESCRIPTION	PARTS AVAIL	QTY PER ASSY
		HELISAS – (PITCH) SERVO ASSEMBLY AND COMPONENTS INSTALLATION		
22-17-1	2703	Hole Plug (install using item 2)	X	1
2	B270-15	Adhesive	X	A/R
3	C058-16	Grip Assembly (incl items 1, 2, 4, 7 thru 9, and 13 thru 15)	X	1
4	B300-3	Switch Assembly – “HYD OFF” (incl items 5 and 6)	X	1
5	—	Nut	O	1
6	—	Lockwasher	O	1
7	C214-27	Plate	X	1
8	MS24693-S1	Screw	X	4
9	D443-7	Guard	X	1
10	94773A770	Washer	X	5
11	B227-3	Lockwasher	X	5
12	B227-4	Dress Nut	X	4
13	B227-8	Switch Assembly – "TRIM" (includes items 10 [1], 11 [1] P/N 702501201 dress nut, and P/N 801801000 cap)	X	1
14	B227-7	Switch Assembly – “AP OFF” (incl items 6, 10 [1], 11 [1], and 12 [1])	X	1
15	B227-2	Switch Assembly – "FREQ" (incl items 10 [1], 11 [1], and 12 [1])	X	3
16	F444	Cover Assembly – Cyclic (ref)		
17	01309-03-01*	Control Panel (For Software Version 52; used only with item 19.)	X	1
18	01309-01-01*	Control Panel (For Software Version 51; used only with item 20, not shown.)	X	1
19	01311-02-111*	Flight Control Computer (For Software Version 52; used only with item 17, ref.)		
20	01311-03-11*	Flight Control Computer (For Software Version 51. Used only with item 18, not shown; ref.)		
21	MS21042L08	Nut	X	4
22	NAS1149FN832P	Washer	X	4
23	MS3367-5-9	Ty-Rap	X	A/R
24	M23190/1-2	Clamp	X	1
25	MS27039C0806	Screw	X	4
26	01317-4*	Servo Assembly (Roll, ref; see Figure 22-21)		
27	NAS557-16A	Grommet	X	1
28	NAS6606-11	Bolt	X	1
29	NAS1149F0332P	Washer	X	4
30	C069	Cyclic Control Assembly (ref)		

NOTES * Genesys-Aerosystems part number

Continues

FIGURE AND INDEX NUMBER	PART NUMBER	DESCRIPTION	PARTS AVAIL	QTY PER ASSY
		HELISAS – (PITCH) SERVO ASSEMBLY AND COMPONENTS INSTALLATION (Cont'd)		
22-17-31	D210-3	Nut	X	2
32	A341-1	Spacer	X	4
33	A127-3	Rod End	X	2
34	B330-7	Stamped Nut	X	1
35	AN315-3R	Nut	X	1
36	A336-8	Tube	X	1
37	F338-1	Box Assembly (ref)		
38	NAS1149F0363P	Washer	X	2
39	D337-1	Tube Assembly (ref)		
40	NAS6603-3	Bolt	X	2
41	01317-3*	Servo Assembly (Pitch)	X	1
42	NAS6603-18	Bolt	X	1
43	A141-17	Washer	X	1
44	C130-50	Spacer	X	1
45	NAS1149F0332P	Washer (earlier R66s this location)	X	2
46	D210-3	Nut (earlier R66s this location)	X	1
47	—	Nut	O	1
48	—	Lockwasher	O	1
49	B297-5	Circuit Breaker (5 amp; includes items 47, 48, 50, and 51)	X	1
50	—	Screw	O	2
51	—	Washer	O	2
52	-2103	Wire (ref)		
53	G050	Console Assembly (or G070, not shown; ref)		
54	B269-31	Screw Lock (male)	X	2
55	D323-2	Harness Assembly (incl items 54, and 56 thru 58)	X	1
56	B158-6	Heat Shrink	X	A/R
57	B269-22	Backshell	X	1
58	B269-8	Receptacle	X	1
59	D323-14	Harness Assembly (incl items 54, and 56 thru 58)	X	1
60	G060	Console Assembly (ref)		

NOTES * Genesys-Aerosystems part number.

Intentionally Blank

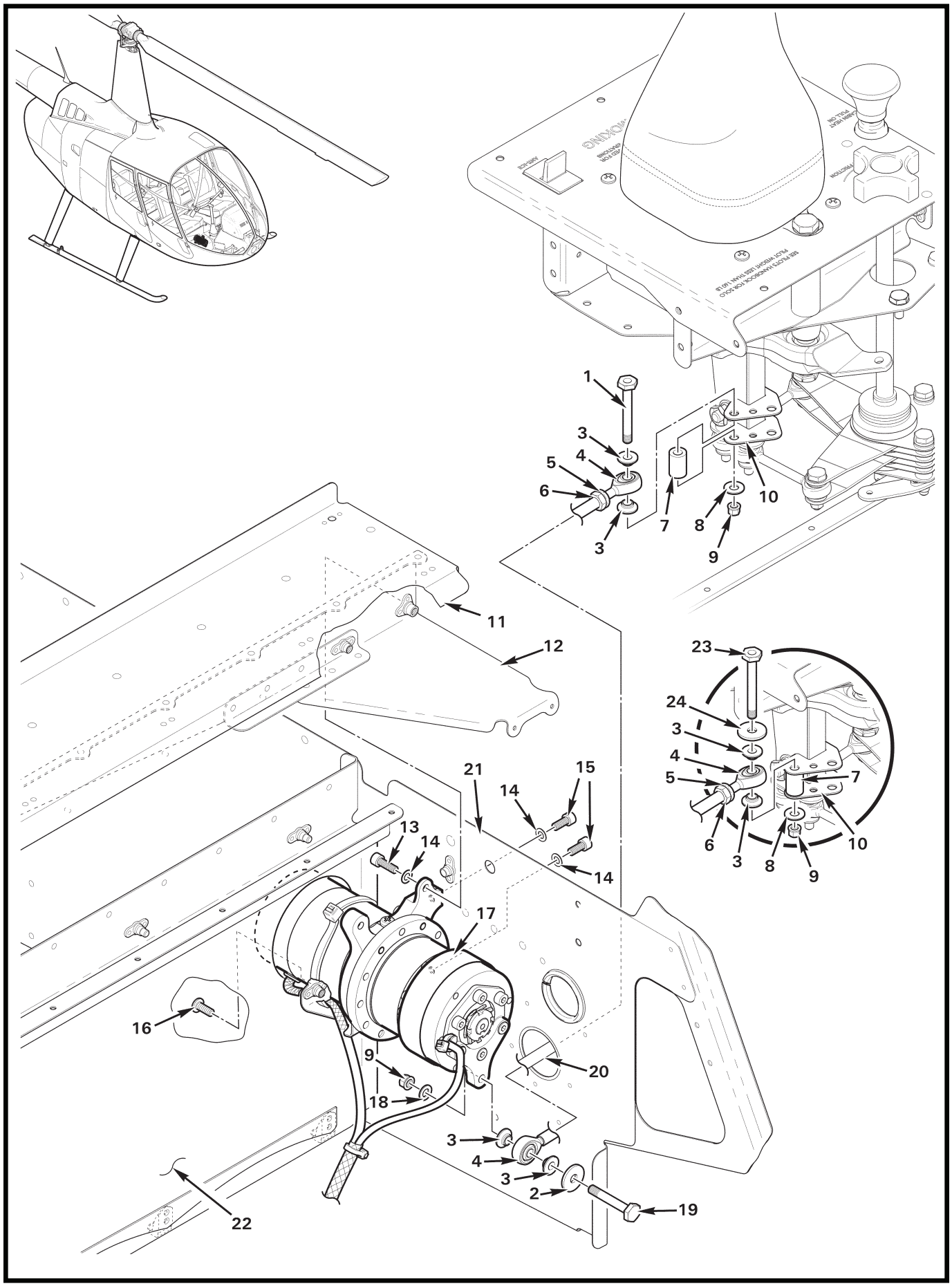
1
3
4
5
6
3
7
8
9
10
11
12
13
14
14
14
15
16
17
18
9
20
21
22
23
24
3
4
5
6
3
8
9
10
7
3
4
3
2
19

FIGURE AND INDEX NUMBER	PART NUMBER	DESCRIPTION	PARTS AVAIL	QTY PER ASSY
		HELISAS – (ROLL) SERVO ASSEMBLY INSTALLATION		
22-21-1	NAS6603-20	Bolt	X	1
2	A141-17	Washer	X	1
3	A341-1	Spacer	X	4
4	A127-3	Rod End	X	2
5	B330-7	Stamped Nut	X	2
6	AN315-3R	Nut	X	2
7	C130-51	Spacer	X	1
8	NAS1149F0332P	Washer	X	1
9	D210-3	Nut	X	3
10	D320-8	Stick Assembly – Cyclic (ref)		
11	F391-1	Cover Assembly (ref)		
12	D353-5	Brace Assembly (ref)		
13	NAS1352-08-8P	Screw	X	2
14	NAS620-8L	Washer	X	4
15	NAS1352-08-6P	Screw	X	2
16	B526-6	Screw	X	1
17	01317-4*	Servo Assembly (Roll)	X	1
18	NAS620-10L	Washer	X	1
19	NAS6603-14	Bolt	X	1
20	A336-8	Tube	X	1
21	F293-2	Keel Panel – Forward (ref, LH)		
22	G702-7	Cover Assembly (ref, see Figure 22-23)		
23	NAS6603-21	Bolt (earlier R66s)	X	1
24	A141-17	Washer (earlier R66s)	X	1

NOTES * Genesys-Aerosystems part number

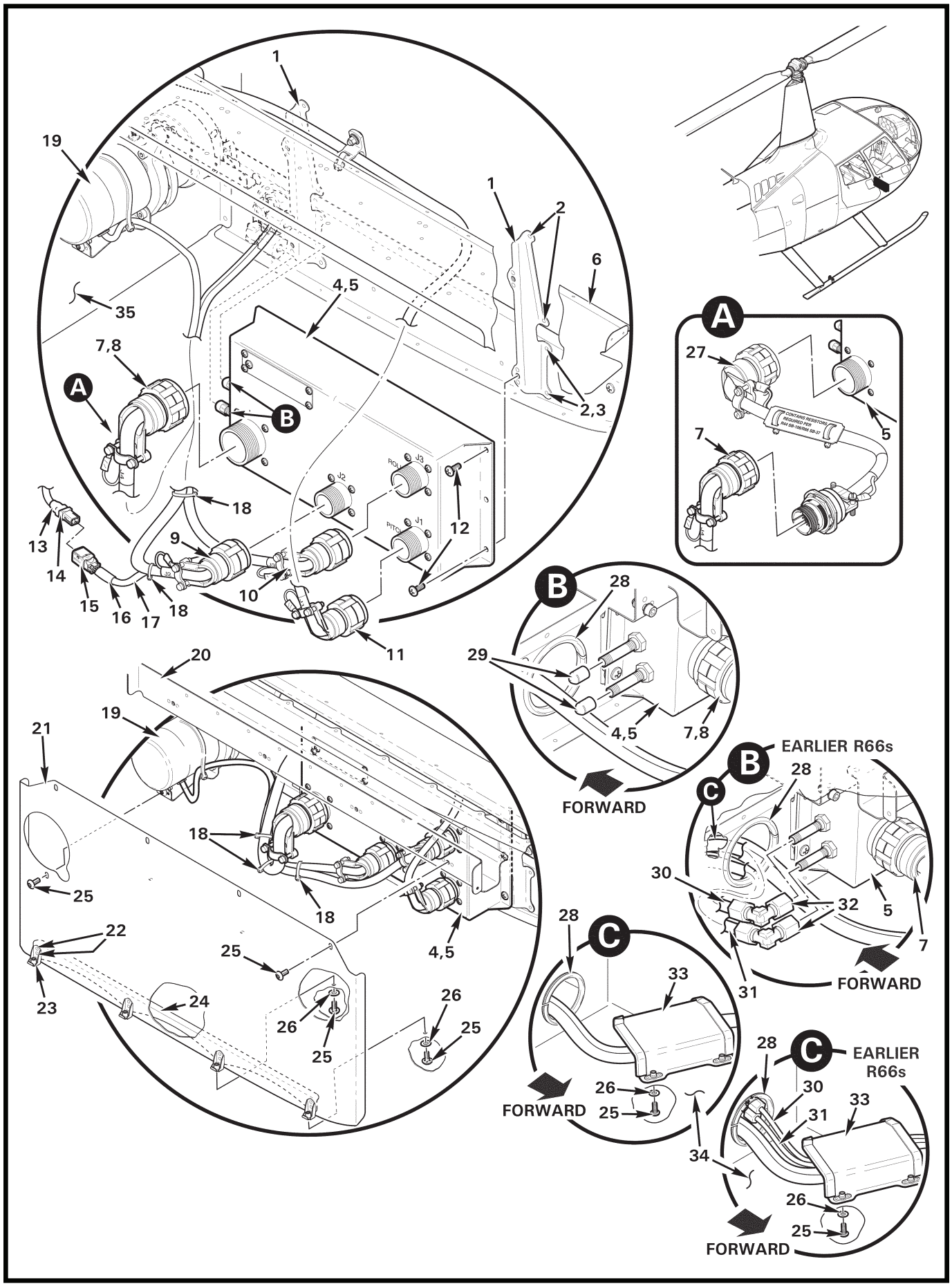
1
19
1
2
6
4,5
35
7,8
A
B
2,3
J3
J2
J1
18
12
13
9
14
10
15
16
17
18
11
A
27
5
7
B
28
29
4,5
7,8
FORWARD
20
19
21
18
25
18
22
4,5
25
23
24
26
26
25
25
EARLIER R66s
B
28
C
30
32
5
7
31
FORWARD
28
C
33
26
25
FORWARD
28
C
EARLIER R66s
30
33
31
34
26
25
FORWARD

FIGURE AND INDEX NUMBER	PART NUMBER	DESCRIPTION	PARTS AVAIL	QTY PER ASSY
		HELISAS – FLIGHT CONTROL COMPUTER INSTALLATION		
22-23-1	D358-1	Support Assembly	X	2
2	MS20470AD3	Rivet	X	8
3	MS20604R3W2	Rivet (optional)	X	2
4	01311-02-111*	Flight Control Computer (For Software Version 52; used only with Figure 22-17 item 17.)	X	1
5	01311-03-11*	Flight Control Computer (For Software Version 51; used only with Figure 22-17 item 18.)	X	1
6	F391-1	Panel (ref)		
7	D323-12	Harness Assembly (G500H, for use with item 5 only)	X	1
8	D323-13	Harness Assembly (J4 or Aspen)	X	1
9	D323-2	Harness Assembly (Autopilot, Std; Incl items 15 thru 17)	X	1
	D323-14	Harness Assembly (Autopilot, Long; Incl items 15 thru 17)	X	1
10	01317-4*	Servo Wire Harness Assembly (Roll, ref)		
11	01317-3*	Servo Wire Harness Assembly (Pitch, ref)		
12	MS27039C0806	Screw	X	4
13	D323-15	Harness Assembly (EFIS, G500H; Incl items 14, 16, 17, B268-3 Lacing Tape, and wires)	X	1
	D323-10	Harness Assembly (EFIS, G500H; Incl items 14, 16, 17, B268-3 Lacing Tape, and wires; for use with item 5 only)	X	1
	D323-11	Harness Assembly (EFIS, Aspen; Incl items 14, 16, 17, B268-3 Lacing Tape, and wires)	X	1
14	D269-12	Receptacle (includes [9] M39029/58-360 pins)	X	1
15	D269-11	Plug (includes [9] M39029/57-354 sockets)	X	1
16	B158-6	Heat Shrink	X	A/R
17	B266-4	Sleeving	X	A/R
18	MS3367-5-0	Ty-Rap	X	A/R
19	01317-4*	Servo Assembly — Roll (ref)		
20	F362-5	Beam Assembly (ref)		
21	G702-7	Cover Assembly (incl items 22 thru 24)	X	1
22	MS20470AD3	Rivet	X	8
23	MF6000-08	Nutplate	X	4
24	G702-12	Stiffener	X	1
25	B526-6	Screw	X	11

NOTES * Genesys-Aerosystems part number

Continues

FIGURE AND INDEX NUMBER	PART NUMBER	DESCRIPTION	PARTS AVAIL	QTY PER ASSY
		HELISAS – FLIGHT CONTROL COMPUTER INSTALLATION (Cont'd)		
22-23-26	B527-08	Washer	X	6
27	D840-1*	Harness Assembly (incl items 28 and 29)	X	1
28	NAS557-28A	Grommet	X	1
29	VC-240-8	Cap	X	2
30	A729-23	Static Tube (ref)		
31	A729-23	Pitot Tube (ref)		
32	50-4-N-O	Elbow	X	2
33	D555-4	Shield Assembly	X	1
34	F272-1	Chin (ref)		
35	F293-2	Keel Panel — Fwd (RH, ref; see Figure 22-21)		

NOTES * Harness may be installed between items 5 and 7 as an alternate method of compliance with R66 SB-37.

CHAPTER 25

FURNISHINGS

Figure	*Title*	*Page*
25-1	Seat Installation	25.0
25-3	Forward Seat Belt Installation	25.2
25-5	Aft Seat Belt Installation	25.4
25-9	Five-Point Harness Installation	25.8
25-11	Five-Point Harness Inertia Reel Installation	25.10
25-13	Five-Point Harness Bumper Assembly Installation	25.12
25-15	Carpet Installation	25.14
25-17	Headliner and Insulation Installation	25.16
25-19	Document Holder Installation	25.18
25-19B	Fire Extinguisher (Halotron BrX) Installation – Pilot's Side	25.19A
25-21	Fire Extinguisher (Halon) Installation – Co-Pilot's Side	25.20
25-23	Kannad ELT Installation	25.22
25-25	Cargo Hook Installation	25.24
25-27	Cargo Hook – Installation	25.26
25-31	Cargo Hook – Details	25.30
25-35	Cargo Hook – Left Side Details	25.34
25-39	Cargo Hook – Right Side Details	25.38
25-43	Cargo Hook – Left Seat Flight Controls	25.42
25-47	Guard Assembly Installation	25.46

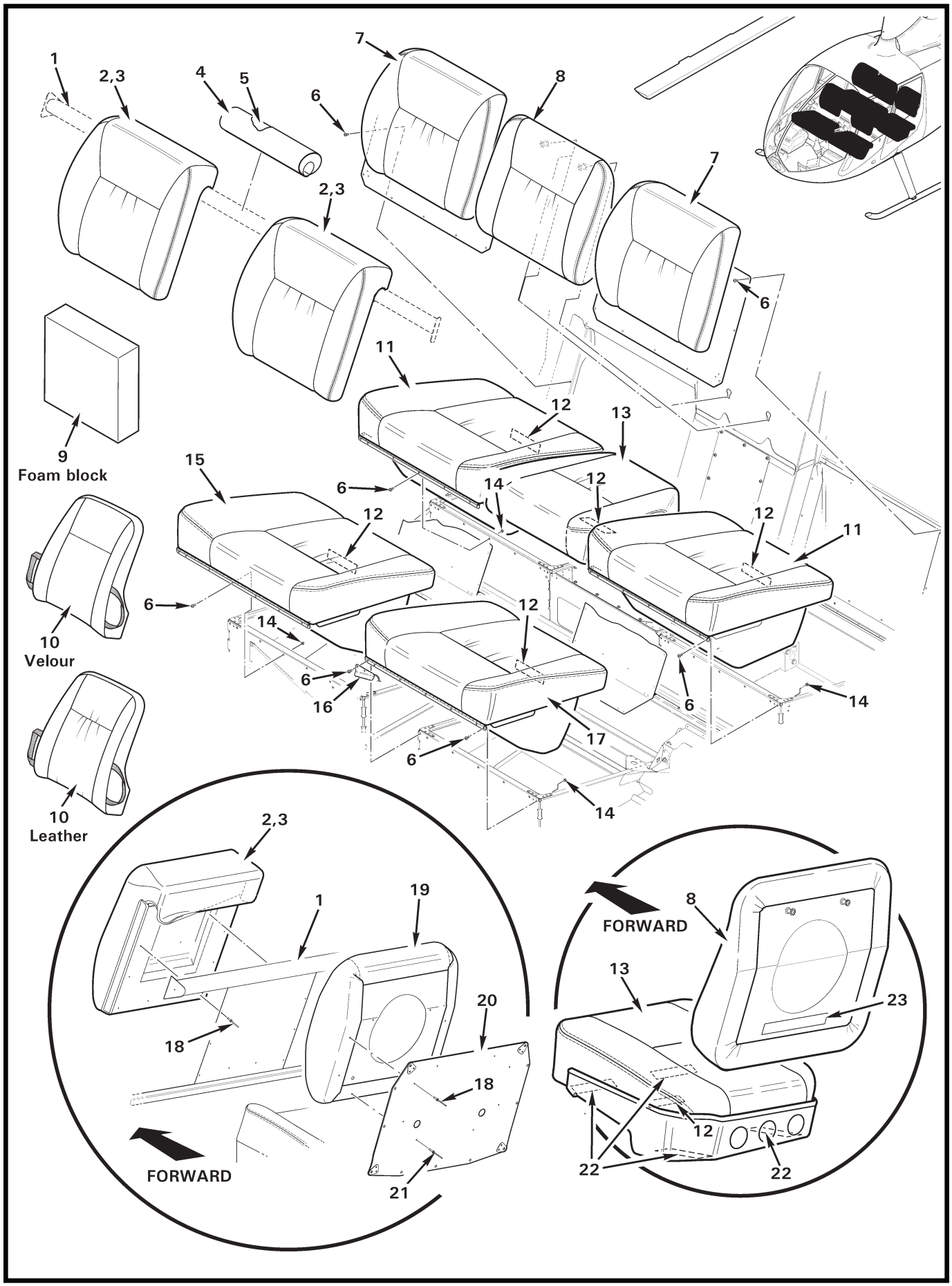
1
2,3
4
5
6
7
8
7
2,3
6
11
12
13
9
Foam block
15
6
14
12
12
12
11
6
10
Velour
12
14
6
16
6
14
17
6
14
10
Leather
2,3
1
19
18
20
18
21
FORWARD
FORWARD
8
13
23
12
22
22

FIGURE AND INDEX NUMBER	PART NUMBER	DESCRIPTION	PARTS AVAIL	QTY PER ASSY
		SEAT INSTALLATION		
25-1-1	F423-1	Weldment (seat support, Ref)		
2	F936-1*	Back Rest Assembly (install using item 3 and 18)	X	2
3	B270-18PT	Adhesive	X	A/R
4	C420-2*	Cover Assembly	X	1
5	C424-2	Padding	X	1
6	MS27039C0806	Screw	X	49
7	F003-23	Seat Back Assembly (RH and LH, includes items 18 thru 21)	X	2
8	F932-1*	Back Rest Assembly (not installed in R66 Police; see Figure 90-79 for optional G749 console)	X	1
9	A693-1	Cushion (for shorter pilots, 14 in. X 14 in. X 3 in. foam block)	X	1
10	A693-2*	Cushion Assembly (optional; for shorter pilots)	X	1
11	F921-1*	Seat Assembly (RH and LH, includes item 12 and hinge)	X	2
12	F654-19	Decal – "Energy-Absorbing Seat..."	X	5
13	F931-1*	Seat Assembly (Incl items 12 and 22; not installed in R66 Police, see Figure 90-79)	X	1
14	MS21042L08	Nut	X	29
15	F928-1*	Seat Assembly (includes item 12 and hinge)	X	1
16	G196-7	Light Assembly (Ref)		
17	F930-1*	Seat Assembly (includes item 12 and hinge)	X	1
18	B204-2	Rivet	X	38
19	F936-2*	Back Rest Assembly (RH and LH)	X	2
20	F465-4	Panel Assembly (RH and LH)	X	2
21	B204-3	Rivet	X	4
22	B175-11	Hook Tape	X	A/R
23	B175-11	Hook Tape (earlier R66s this location)	X	A/R

Code	Definition
GRL	Gray leather
GRV	Gray velour
TNL	Tan leather
TNV	Tan velour
CHL	Charcoal leather
CHV	Charcoal velour

NOTES * Refer to *chart* at the end of parts list when ordering. Include code after dash no., for example, F936-1 in gray leather, order "F936-1GRL".

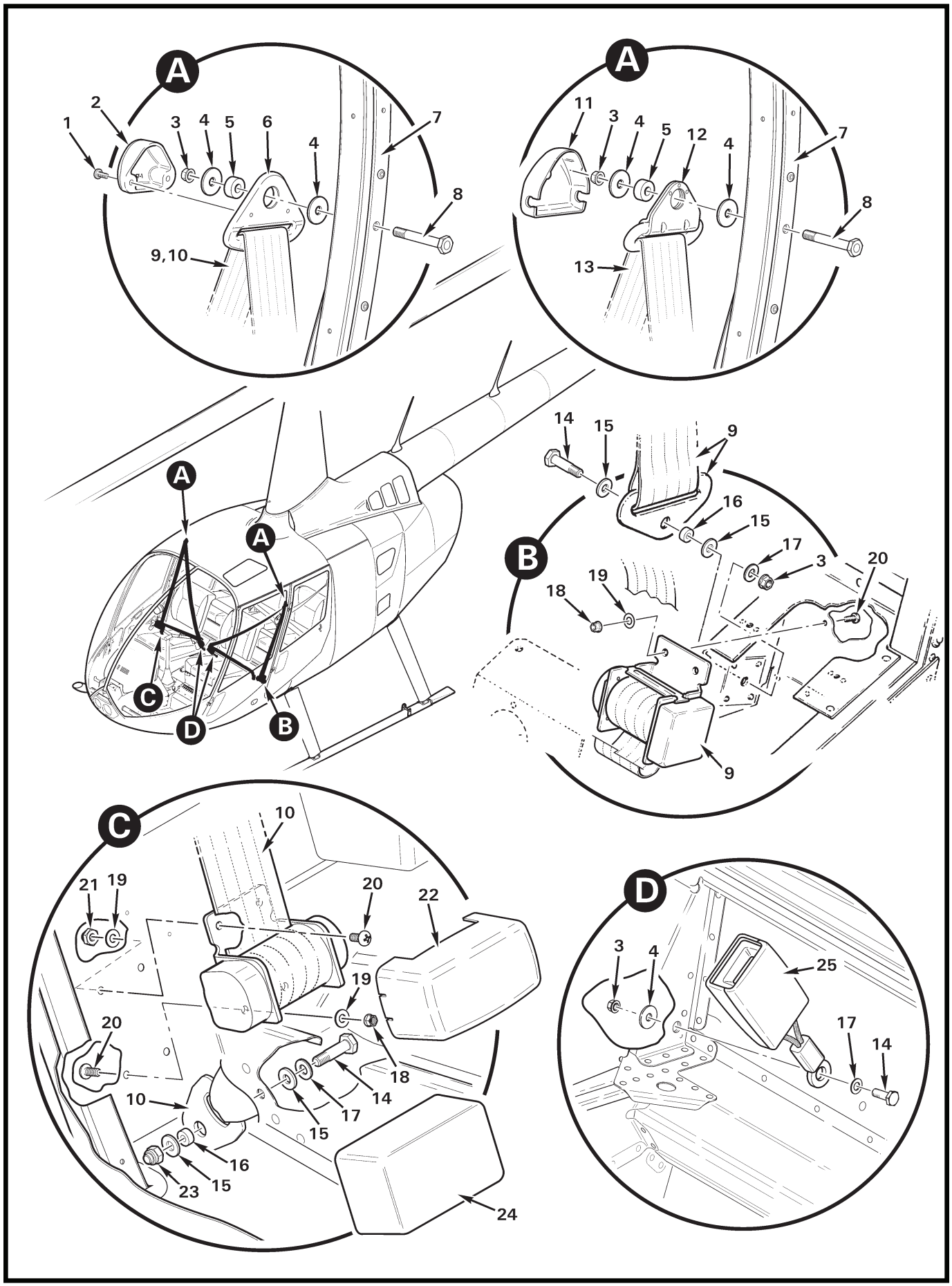
A
1
2
3
4
5
6
4
7
8
9,10
A
11
3
4
5
12
4
7
8
13
A
A
C
D
B
14
15
9
16
15
17
3
20
B
19
18
9
C
10
21
19
20
22
19
20
18
14
17
15
10
16
15
23
24
D
3
4
25
17
14

FIGURE AND INDEX NUMBER	PART NUMBER	DESCRIPTION	PARTS AVAIL	QTY PER ASSY
		FORWARD SEAT BELT INSTALLATION		
25-3-1	505098-6046	Screw	X	1
2	506357-1	Cover	X	1
3	MS21042L4	Nut	X	4
4	A141-14	Washer	X	6
5	A130-44	Spacer	X	2
6	506356-1	Guide (Ref)		
7	F403	Post Assembly (Ref)		
8	NAS6604-22	Bolt	X	2
9	F628-1	Connector Assembly (LH, includes item 2 and 6)	X	1
10	F628-2	Connector Assembly (RH, includes item 2, 6, and 22)	X	1
11	505798-1	Cover	X	2
12	505561-1	Guide Assembly (Ref, earlier R66's)		
13	F628-1*	Connector Assembly (Ref; LH FWD, revision "F" and prior)		
	F628-2*	Connector Assembly (Ref; RH FWD, revision "F" and prior)		
14	NAS6604-5	Bolt	X	3
15	MS20002-4	Washer	X	4
16	A130-28	Spacer	X	2
17	NAS1149F0432P	Washer	X	4
18	MS21042L3	Nut	X	6
19	NAS1149F0332P	Washer	X	8
20	MS27039C1-07	Screw	X	8
21	B340-8	Nut	X	2
22	506354-3	Cover	X	1
23	B340-10	Nut	X	1
24	505663-3	Cover	X	1
25	F628-5	Buckle Assembly	X	2

NOTES * Earlier R66's.

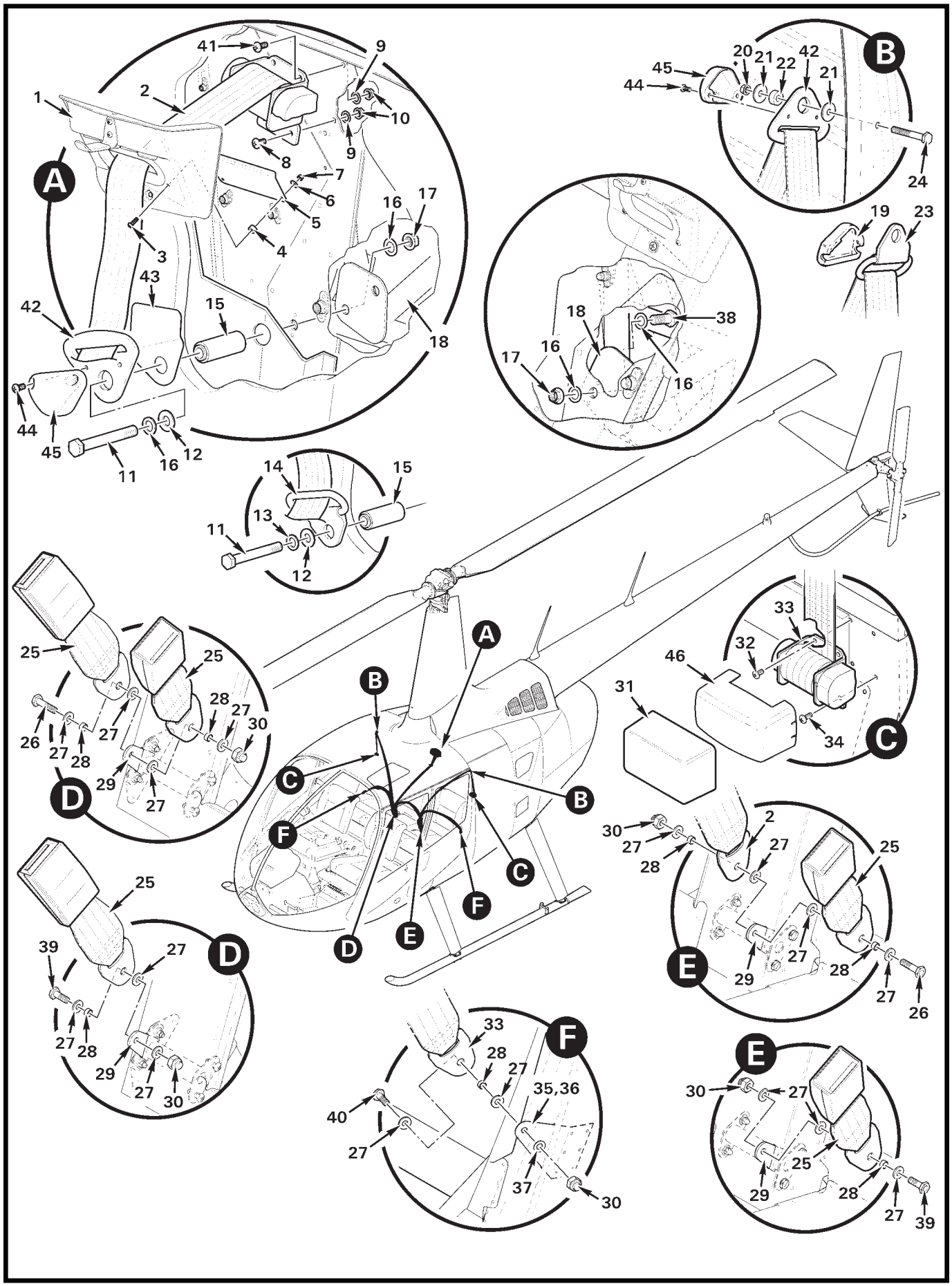

FIGURE 25-5 AFT SEAT BELT INSTALLATION

FIGURE AND INDEX NUMBER	PART NUMBER	DESCRIPTION	PARTS AVAIL	QTY PER ASSY
		AFT SEAT BELT INSTALLATION		
25-5-1	F436-5	Cover Assembly (Ref; see figure 97-57)		
2	F628-4	Connector Assembly (center, includes items 42 and 45)	X	1
3	MS35206-215	Screw	X	2
4	A130-14	Spacer	X	2
5	F437-4	Shield	X	1
6	NAS1149FN416P	Washer	X	2
7	MS21042L04	Nut	X	2
8	MS27039C1-07	Screw	X	2
9	NAS1149F0332P	Washer	X	4
10	D210-3	Nut	X	4
11	NAS6606-36	Bolt	X	1
12	C141-16	Washer	X	1
13	NAS1149F0663P	Washer	X	1
14	505281-1	Guide (web, cover not shown; earlier ships)	O	1
15	F374-7	Spacer	X	1
16	NAS1149F0632P	Washer	X	1
17	D210-6	Nut	X	1
18	F020-1	Frame (Ref)		
19	505798-1	Cover (earlier ships)	X	2
20	D210-4	Nut	X	2
21	A141-14	Washer	X	4
22	A130-44	Spacer	X	2
23	505561-1	Guide (web; earlier ships)	O	2
24	NAS6604-18	Bolt	X	2
25	F628-6	Buckle Assembly	X	3
26	NAS6604-9	Bolt	X	2
27	MS20002-4	Washer	X	12
28	A130-28	Spacer	X	6
29	F371-1	Weldment (anchor, Ref)		
30	B340-10	Nut	X	4
31	505663-3	Cover (earlier ships)	X	2
32	A142-3	Screw	X	4
33	F628-3	Connector Assembly (LH and RH, includes items 42, 45 and 46)	X	2
34	MS27039C1-07	Screw	X	4

NOTES

Continues

FIGURE AND INDEX NUMBER	PART NUMBER	DESCRIPTION	PARTS AVAIL	QTY PER ASSY
		AFT SEAT BELT INSTALLATION (Cont'd)		
25-5-35	F434-1	Anchor – Seat Belt (aft LH, Ref)		
36	F434-2	Anchor – Seat Belt (aft RH, Ref)		
37	NAS1149F0432P	Washer	X	2
38	NAS6606-3	Bolt	X	1
39	NAS6604-6	Bolt	X	2
40	NAS6604-4	Bolt	X	2
41	MS27039C1-08	Screw	X	2
42	506356-1	Guide	O	3
43	G127-1	Guard	X	1
44	505098-6049	Screw	X	2
45	506357-1	Cover	X	3
46	506354-3	Cover	X	2

NOTES

Intentionally Blank

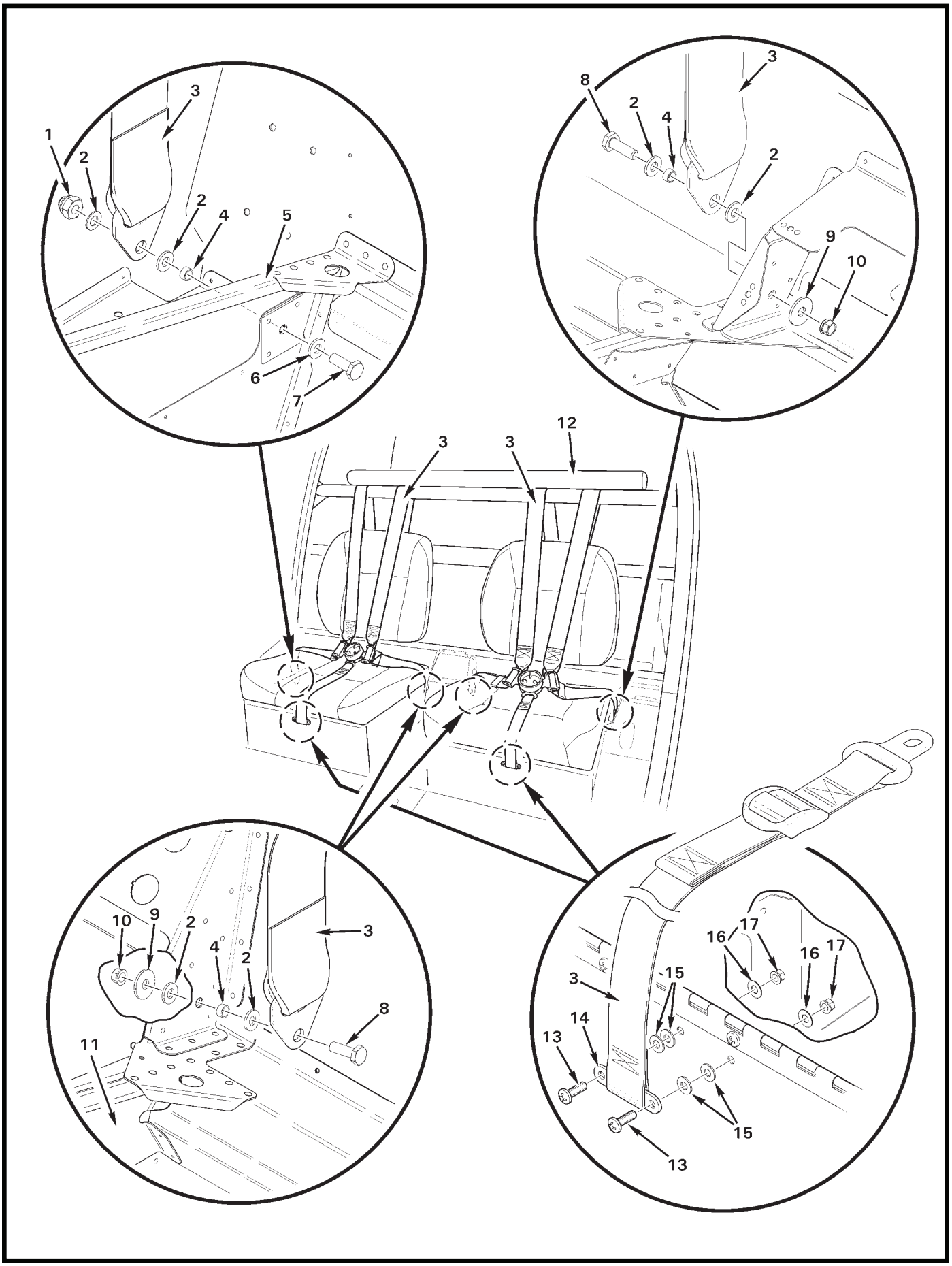

FIGURE 25-9 FIVE-POINT HARNESS INSTALLATION

FIGURE AND INDEX NUMBER	PART NUMBER	DESCRIPTION	PARTS AVAIL	QTY PER ASSY
		FIVE-POINT HARNESS INSTALLATION		
25-9-1	B340-10	Nut	X	1
2	MS20002-4	Washer	X	8
3	C627-6	Harness Assembly (see also figure 25-11)	X	2
4	A130-28	Spacer	X	4
5	F290-1	Seat Assembly (forward RH, Ref)		
6	NAS1149F0432P	Washer	X	1
7	NAS6604-5	Bolt	X	1
8	NAS6604-6	Bolt	X	3
9	A141-14	Washer (under nut)	X	3
10	MS21042L4	Nut	X	3
11	F297-1	Seat Assembly (Ref; forward LH)		
12	F424-1	Bumper Assembly (Ref, see Figure 25-13)		
13	MS27039C0806	Screw	X	4
14	F426-2	Anchor	X	2
15	NAS1149FN832P	Washer	X	8
16	NAS1149FN816P	Washer	X	4
17	MS21042L08	Nut	X	4

NOTES

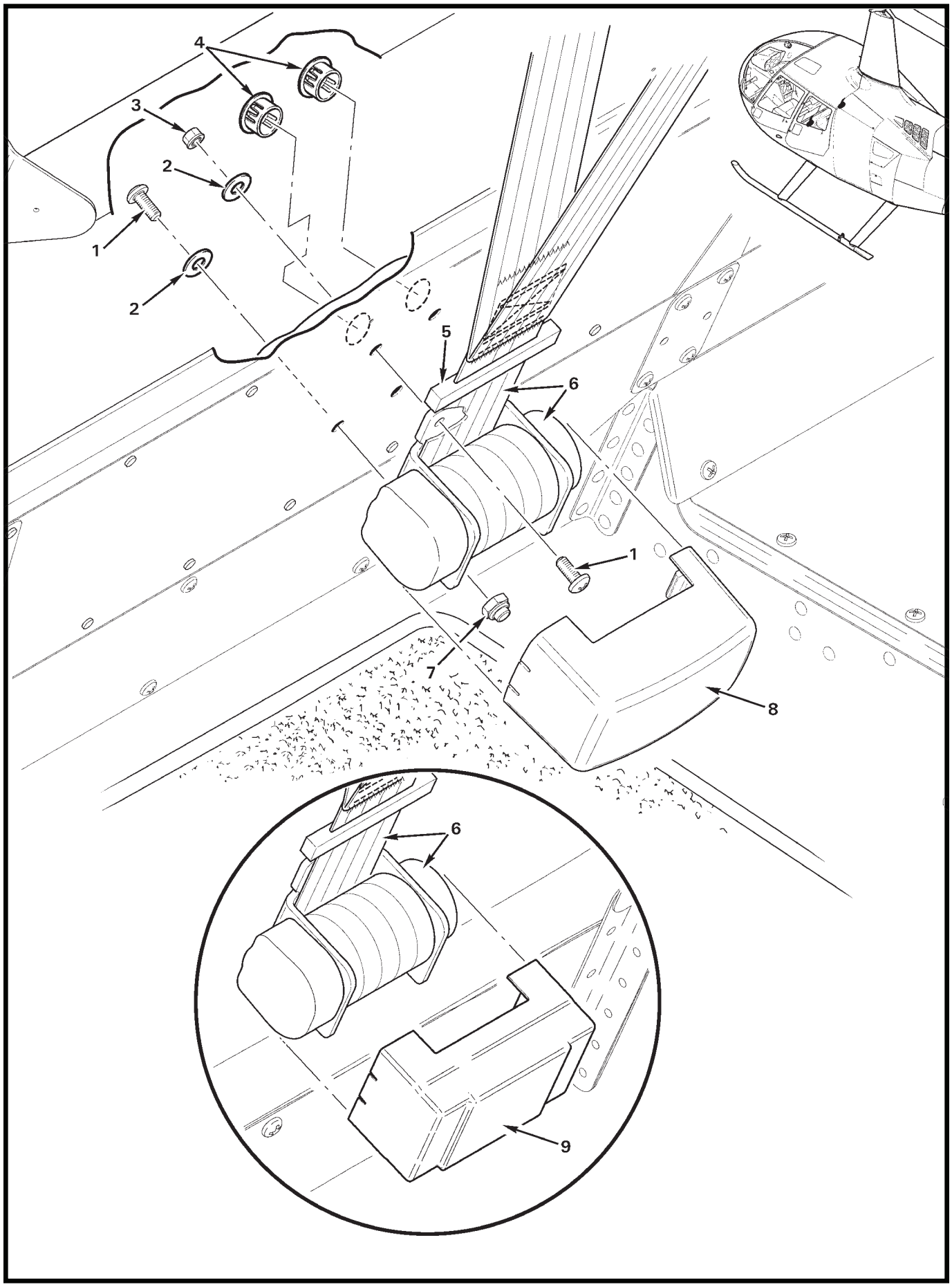
4
3
2
1
2
5
6
1
7
8
6
9

FIGURE AND INDEX NUMBER	PART NUMBER	DESCRIPTION	PARTS AVAIL	QTY PER ASSY
		FIVE-POINT HARNESS INERTIA REEL INSTALLATION		
25-11-1	MS27039C1-07	Screw	X	4
2	A141-17	Washer	X	4
3	D210-3	Nut (upper screws)	X	2
4	2663	Hole Plug	X	2
5	C623-1	Spring (Ref)	O	1
	C623-2	Plate (Ref)	O	1
	C623-3	Block (Ref)	O	1
6	C627-6	Five-Point Harness Assembly (Ref; see Figure 25-9)		
7	B340-8	Nut (lower screws)	X	2
8	506354-3	Cover	X	1
9	505663-3	Cover (earlier ships)	X	1

NOTES

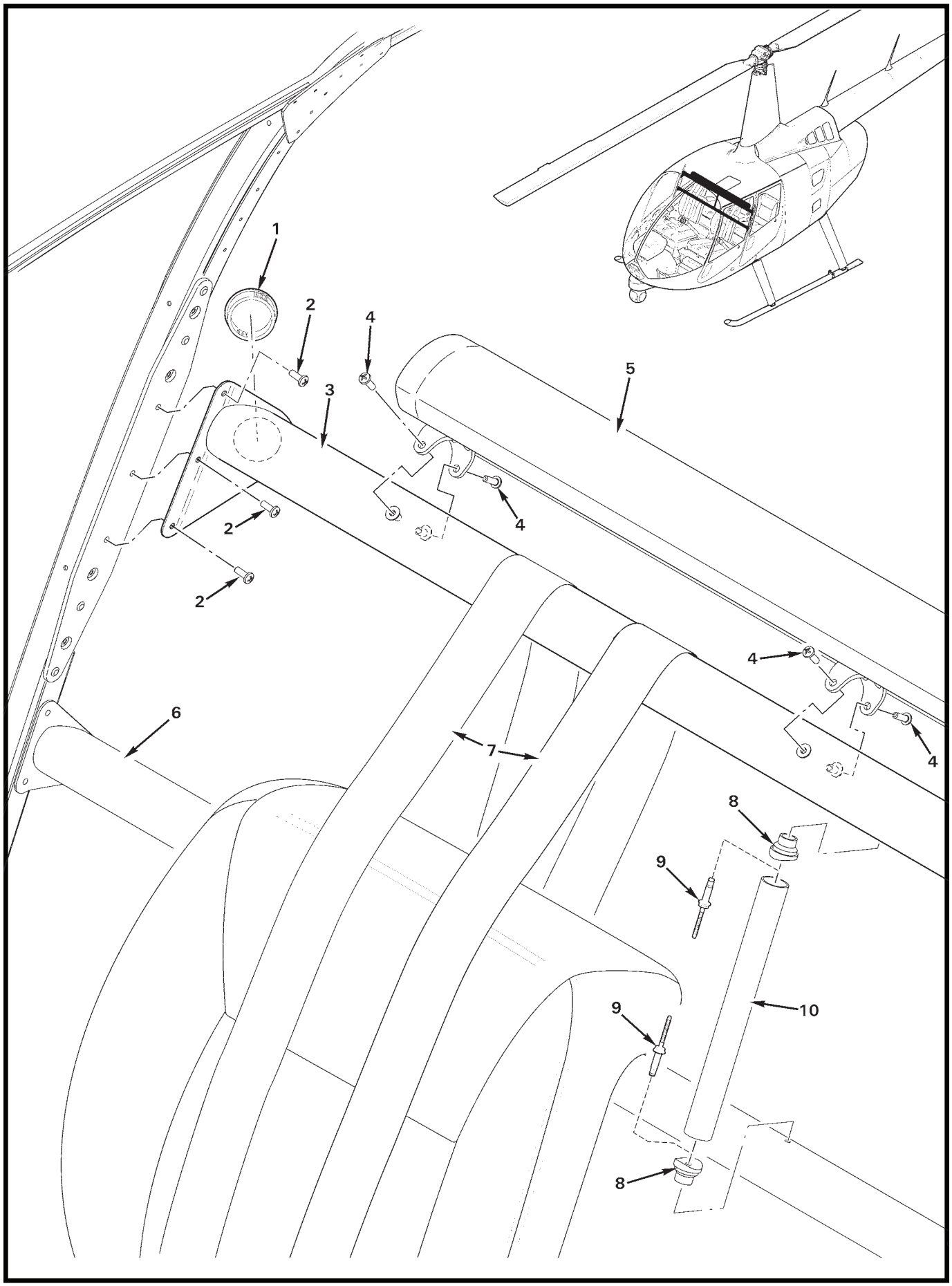
1
2
4
3
5
2
4
2
4
6
7
4
8
9
9
10
8

FIGURE AND INDEX NUMBER	PART NUMBER	DESCRIPTION	PARTS AVAIL	QTY PER ASSY
		FIVE-POINT HARNESS BUMPER ASSEMBLY INSTALLATION		
25-13-1	2740	Hole Plug	X	2
2	MS27039C1-07	Screw	X	6
3	F423-4	Tube Assembly (Incl item 1)	X	1
4	MS27039C0808	Screw	X	8
5	F424-1	Bumper Assembly	X	1
6	F423-1	Tube Weldment (Ref)		
7	C627-6	Five-Point Harness Assembly (Ref)		
8	C421-7	Fitting	X	2
9	NAS9301B-5-06	Rivet	X	2
10	C421-6	Tube	X	1

NOTES

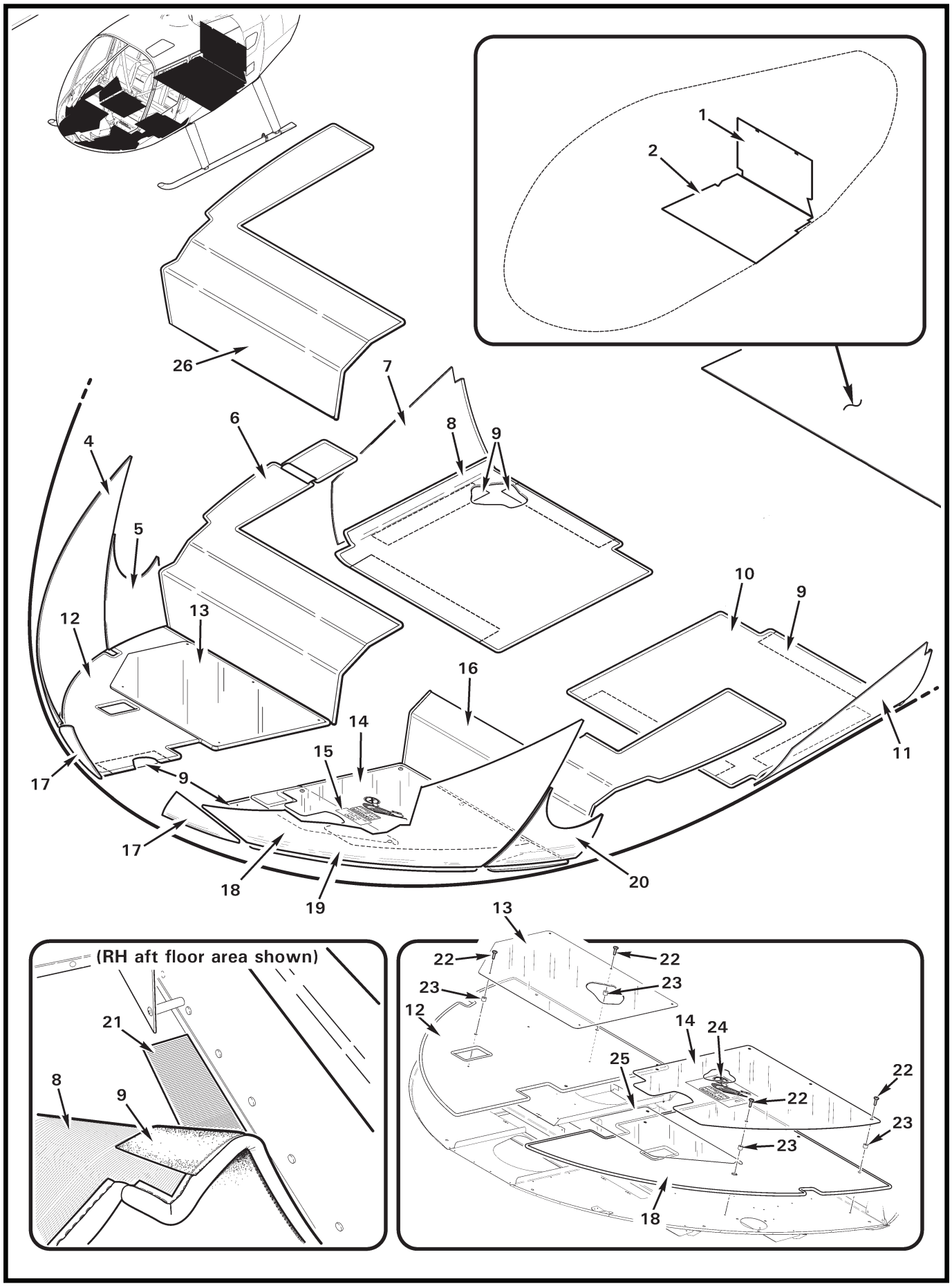
1
2
26
7
6
8
9
4
5
10
9
12
13
16
14
15
11
17
9
17
18
19
20
13
(RH aft floor area shown)
22
22
23
23
12
14
24
21
25
22
8
9
22
23
23
18

FIGURE AND INDEX NUMBER	PART NUMBER	DESCRIPTION	PARTS AVAIL	QTY PER ASSY
		CARPET INSTALLATION		
25-15-1	F469-26*	Liner – Baggage Compartment	X	1
	F469-20*	Liner – Baggage Compartment (earlier R66s; not shown, Ref)	O	1
2	F469-25	Liner – Baggage Compartment	X	1
	F469-21*	Liner – Baggage Compartment (earlier R66s)	X	1
3	B270-8QT	Adhesive	X	A/R
4	F469-12*	Carpet** (RH)	X	1
5	F469-10*	Carpet** (RH)	X	1
6	F469-24*	Carpet Assembly** (RH; flap over external power plug not bonded down, see Figure 96-13)	X	1
7	F469-14*	Carpet Assembly** (RH)	X	1
8	F469-6***	Carpet Assembly** (RH, includes item 9)	X	1
9	B175-4	Loop Tape (black)	X	A/R
	B175-34	Loop Tape (tan)	X	A/R
10	F469-5***	Carpet Assembly** (LH, includes item 9)	X	1
11	F469-13*	Carpet Assembly** (LH)	X	1
12	F469-2***	Carpet Assembly** (RH)	X	1
13	G469-2	Scuff Plate	X	1
14	G469-1	Scuff Plate Assembly (Incl item 23)	X	1
15	B850-25	Hebrew Decal (place above marking on fwd scuff plate)	X	1
16	F469-7*	Carpet Assembly** (LH)	X	1
17	F469-15*	Carpet** (LH and RH)	X	2
18	F469-11*	Carpet** (LH)	X	1
19	F469-1***	Carpet Assembly** (LH)	X	1
20	F469-9*	Carpet** (LH)	X	1
21	B175-13	Hook Tape	X	A/R
22	AN525-832R10	Screw	X	10
23	A130-33	Spacer (between floor and scuff plate)	X	10
24	A654-85	Decal – "Danger" (earlier R66s; replace with G469-1 scuff plate, Ref)		
25	B392-3	Cover (pedal openings)	X	1
26	F469-8	Carpet Assembly (RH; earlier R66s)	X	A/R

NOTES
* Install using item 3.
** Available in dark charcoal only.
*** Install using item 21.

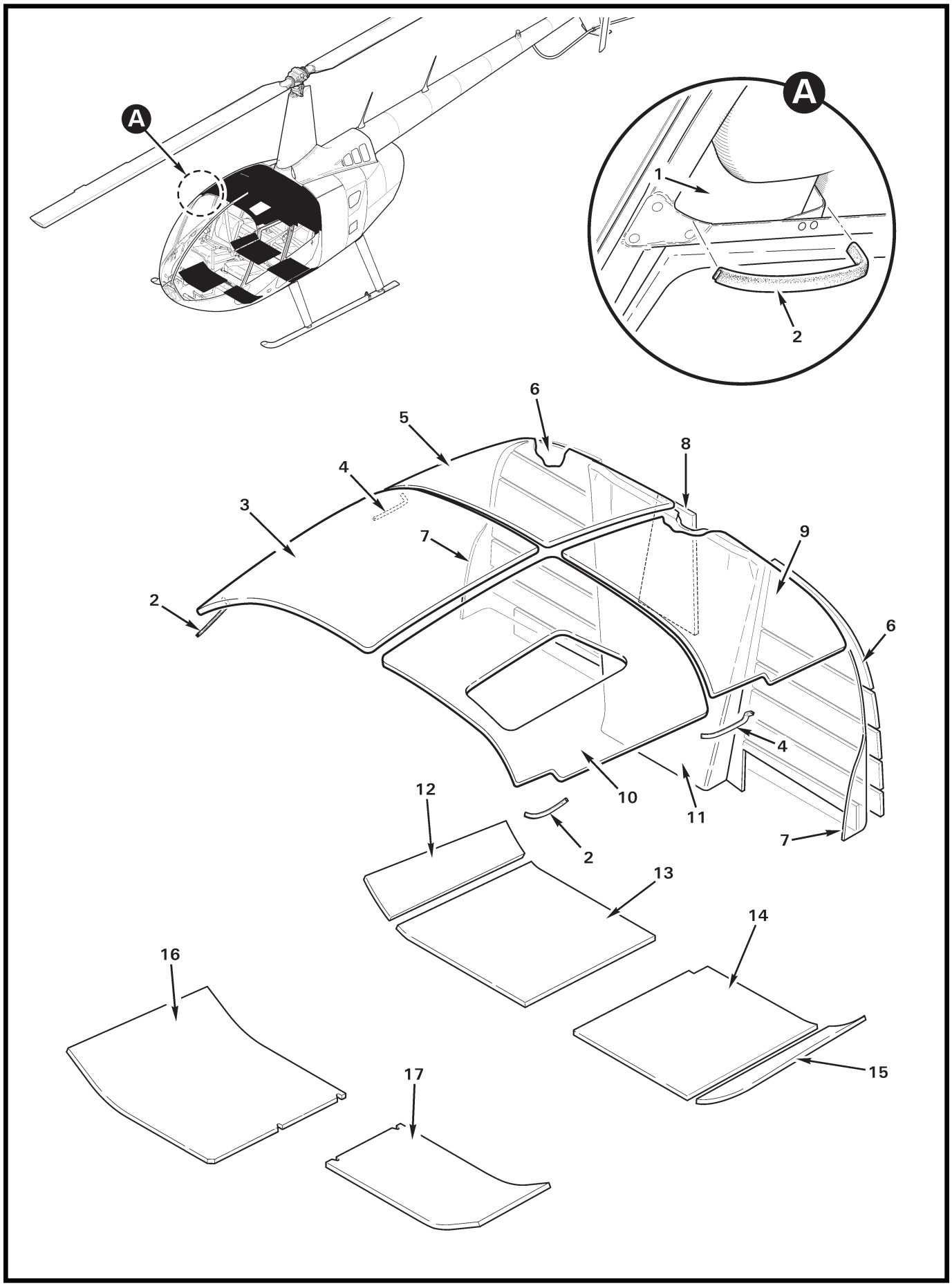
A
A
1
2
6
5
8
4
3
7
9
2
6
4
10
11
12
2
7
13
14
16
15
17

FIGURE AND INDEX NUMBER	PART NUMBER	DESCRIPTION	PARTS AVAIL	QTY PER ASSY
		HEADLINER AND INSULATION INSTALLATION		
25-17-1	C212-3	Patch* (black vinyl, four places)	X	4
2	C212-1	Trim (forward, LH and RH)	X	2
3	F003-6**	Insulation* (RH, headliner)	X	1
4	C212-2	Trim (aft, LH and RH)	X	2
5	F003-15**	Insulation* (RH, aft headliner)	X	1
	F003-18**	Insulation* (RH; with A/C, not shown)	X	1
6	F003-10	Insulation* (RH and LH; cut into sections)	X	2
7	F003-25**	Insulation* (LH)	X	1
	F003-26**	Insulation* (RH)	X	1
	F003-8**	Insulation* (RH and LH; earlier ships)	O	2
8	F003-14	Insulation* (inside main rotor gearbox compartment)	X	1
9	F003-7**	Insulation* (LH)	X	1
	F003-17**	Insulation* (LH; with A/C, not shown)	X	1
10	F003-5**	Insulation* (LH, headliner)	X	1
11	F003-9**	Insulation* (LH, aft headliner)	X	1
12	F470-10	Liner (RH,aft)	X	1
13	F470-8	Liner (RH, under aft seat assemblies)	X	1
	F003-13	Liner (RH, under aft seat assemblies; earlier ships)	O	1
14	F470-7	Liner (LH, under aft seat assemblies)	X	1
	F003-13	Liner (RH, under aft seat assemblies; earlier ships)	O	1
15	F470-9	Liner (LH, aft)	X	1
16	F470-6	Insulation (RH, under forward seat)	X	1
	F003-12	Insulation (RH, under forward seat; earlier ships)	O	1
17	F470-5	Insulation (LH, under forward seat)	X	1
	F003-11	Insulation (LH, under forward seat; earlier ships)	O	1
18	B270-8qt	Adhesive	X	A/R

NOTES * Install using item 18.

** Please specify color (blue, grey, tan or charcoal).

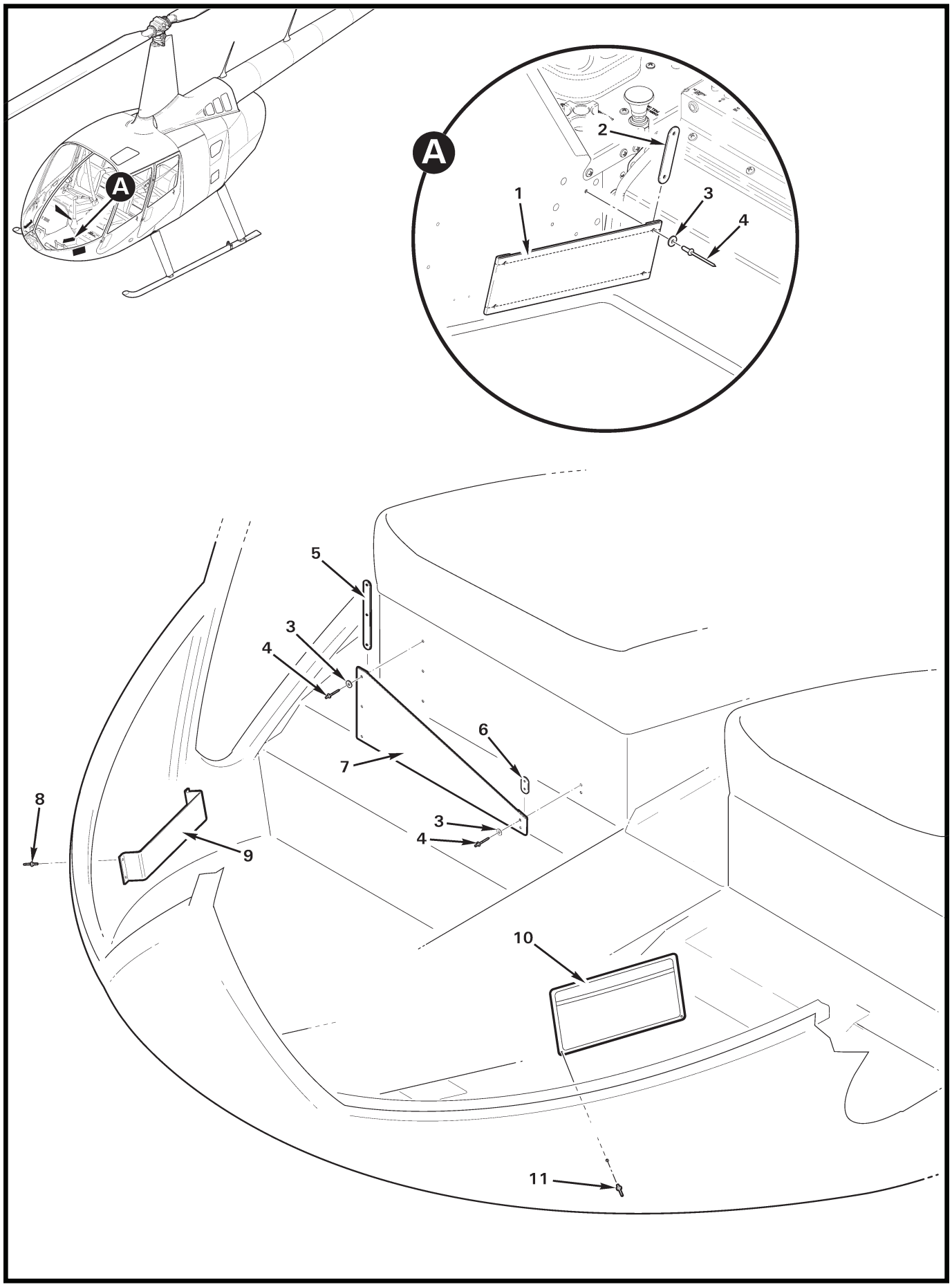
A
A
1
2
3
4
5
3
4
6
7
8
9
3
4
10
11

FIGURE AND INDEX NUMBER	PART NUMBER	DESCRIPTION	PARTS AVAIL	QTY PER ASSY
		DOCUMENT HOLDER INSTALLATIONS		
25-19-1	A912-6	Pocket (console, LH and RH; 2.38" x 10.35")	X	2
	A912-5	Pocket (console, LH and RH; earlier ships, 4.13" x 10.35" not shown)	X	2
2	A913-5	Strip (short, console)	X	4
	A913-3	Strip (long, console; earlier aircraft, not shown)	X	4
3	NAS1149FN632P	Washer	X	16
4	B204-2	Rivet	X	16
5	A913-1	Strip (long, seat)	X	2
6	A913-2	Strip (short, seat)	X	2
7	A912-1	Pocket	X	1
8	NAS9301B-4-05	Rivet	X	4
9	A745-1	Strap	X	1
10	13-07900	License Holder	X	1
11	NAS9301B-4-04	Rivet (or NAS9301B-4-05)	X	4

NOTES

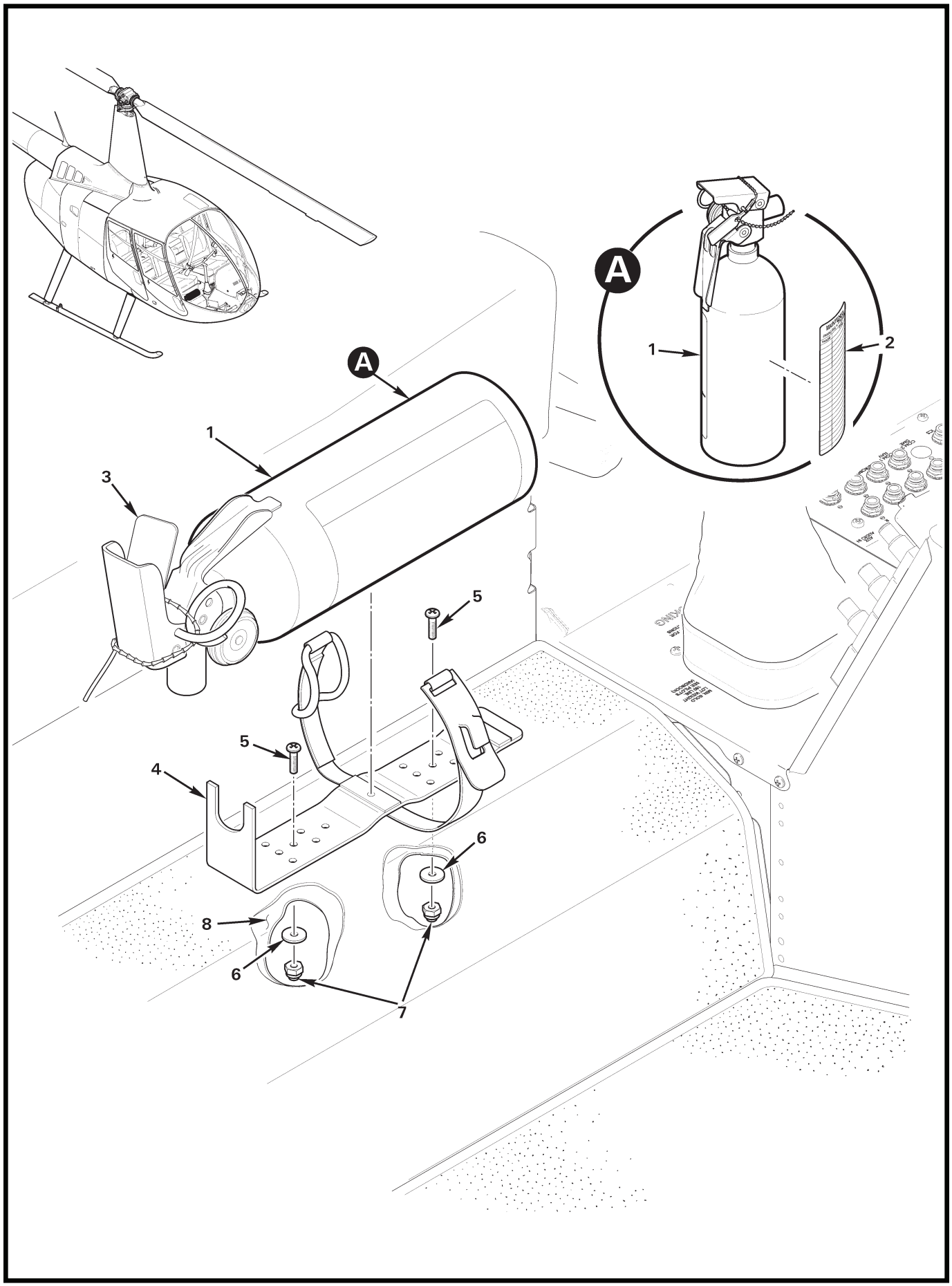

FIGURE 25-19B FIRE EXTINGUISHER (HALOTRON BRX) INSTALLATION – PILOT'S SIDE

FIGURE AND INDEX NUMBER	PART NUMBER	DESCRIPTION	PARTS AVAIL	QTY PER ASSY
		FIRE EXTINGUISHER (HALOTRON BRX) INSTALLATION – PILOT'S SIDE		
25-19B-1	B381-4	Fire Extinguisher Assembly (includes M-900 Fire Extinguisher and items 2 & 3)	X	1
	M-900	Fire Extinguisher (Halotron BrX; 31-oz. capacity)	O	1
2	G654-23	Decal – Maintenance Log	X	1
3	RT-A400-CT	Safety Cable	X	1
4	B381-5	Bracket	X	1
5	AN525-10R7	Screw	X	2
6	NAS1149F0332P	Washer	X	2
7	B340-8	Nut	X	2
8	F391-1	Cover (ref)		

NOTES

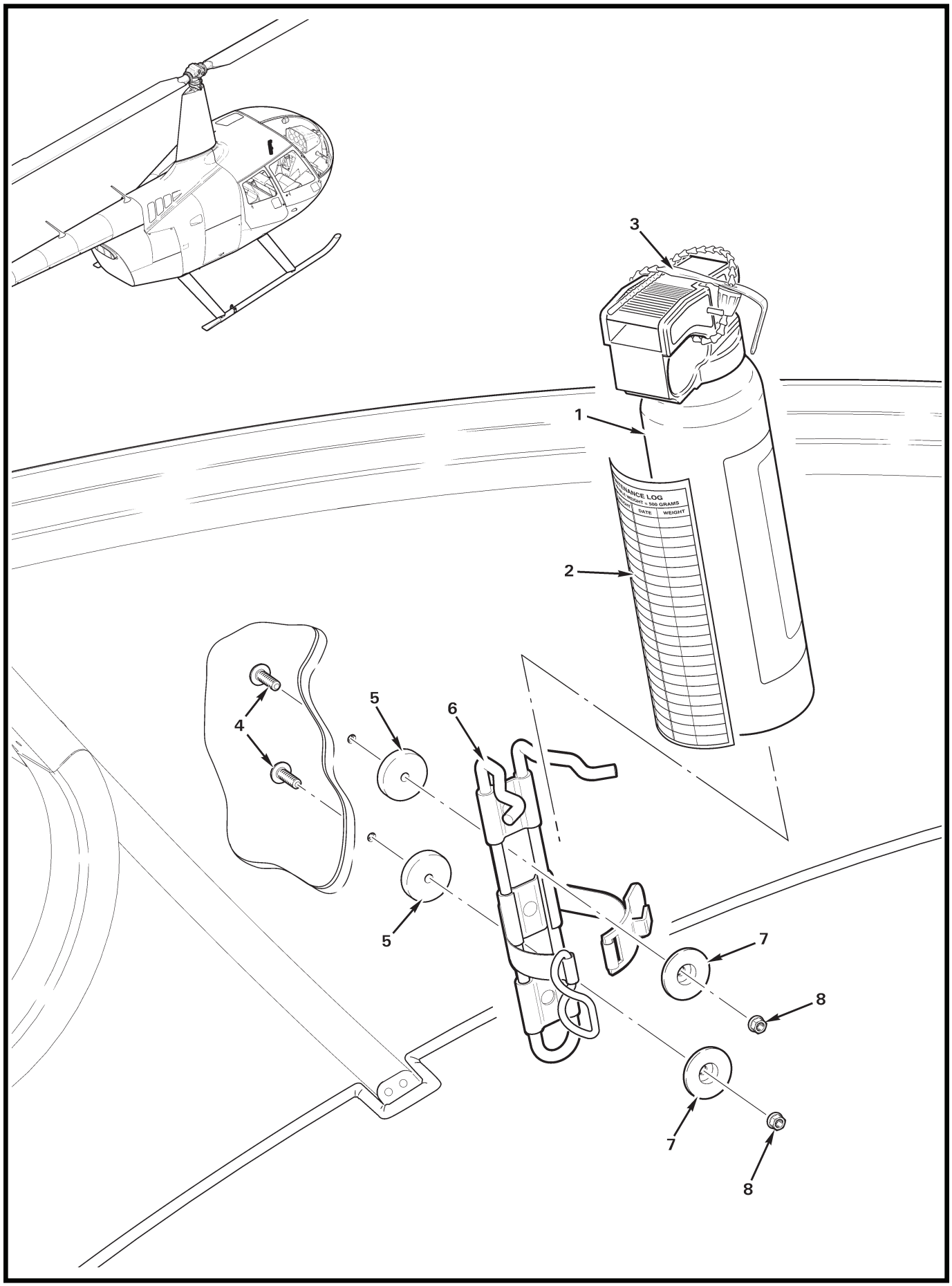

FIGURE 25-21 FIRE EXTINGUISHER (HALON)
INSTALLATION – CO-PILOT'S SIDE

FIGURE AND INDEX NUMBER	PART NUMBER	DESCRIPTION	PARTS AVAIL	QTY PER ASSY
		FIRE EXTINGUISHER (HALON) INSTALLATION – CO-PILOT'S SIDE		
25-21-1	B381-1	Fire Extinguisher Assembly (includes RT-A400 Fire Extinguisher and items 2 & 3)	X	1
	RT-A400	Fire Extinguisher (Halon; 14-oz. capacity)	O	1
2	G654-15	Decal – Maintenance Log	X	1
3	RT-A400-CT	Safety Cable	X	1
4	AN526C832R_	Screw (Select screw length to provide 0.00–0.06 in. exposed threads.)	X	2
5	C130-54	Spacer	X	2
6	B381-3	Bracket	X	1
7	G220-1	Retainer	X	2
8	MS21042L08	Nut	X	2

NOTES

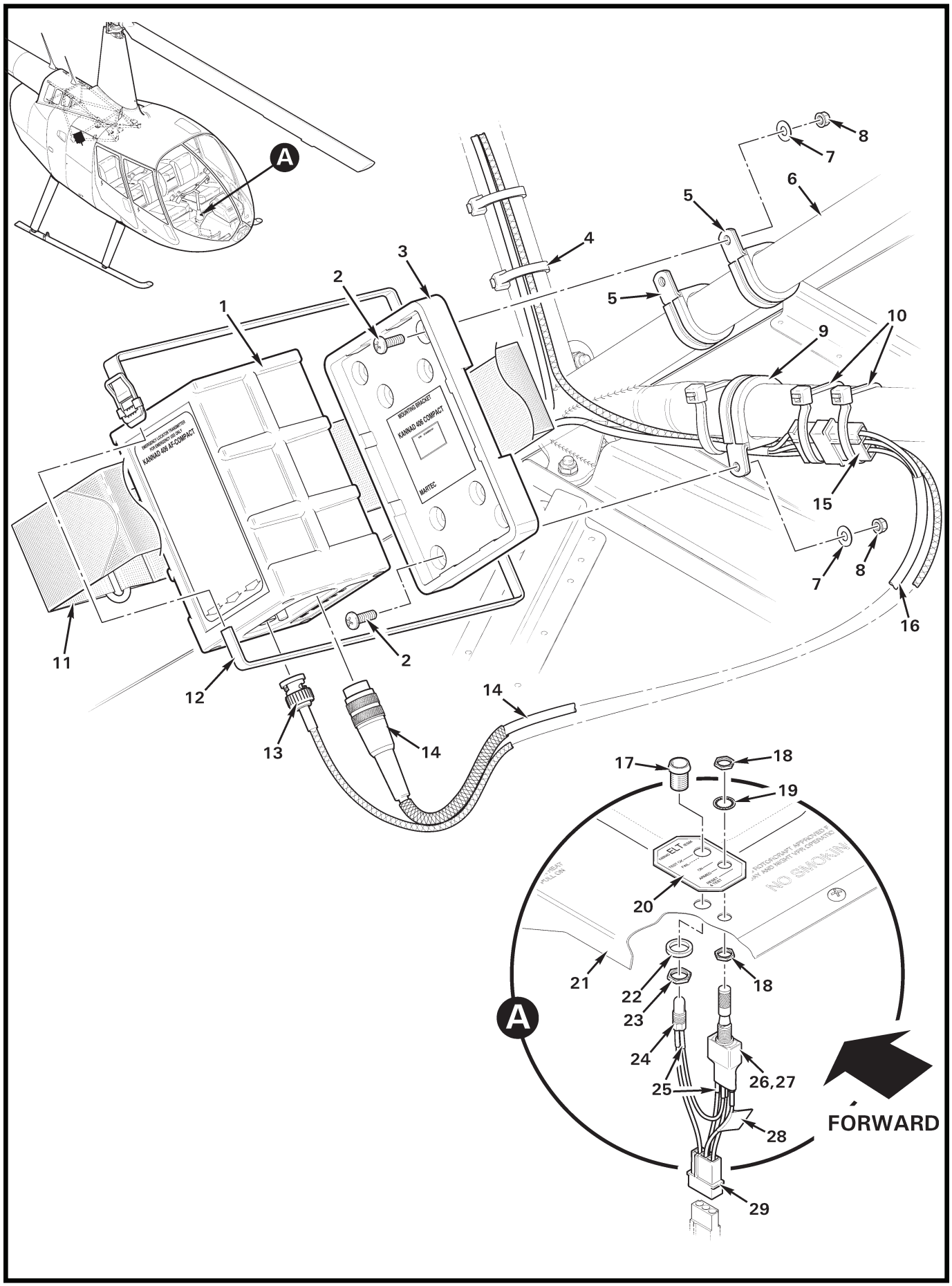
A
1
2
3
4
5
6
7
8
9
10
11
12
13
14
15
16
17
18
19
20
21
22
23
24
25
26,27
28
29
MOUNTING BRACKET
KANNAD 406 COMPACT
MARTEC
EMERGENCY LOCATOR TRANSMITTER
FOR EMERGENCY USE ONLY
KANNAD 406 AF-COMPACT
ELT
PULL ON
NO SMOKING
FORWARD

FIGURE AND INDEX NUMBER	PART NUMBER	DESCRIPTION	PARTS AVAIL	QTY PER ASSY
		KANNAD ELT INSTALLATION		
25-23-1	S1851501-02*	ELT Transmitter (Integra AF)	X	1
	S1840501-01*	ELT Transmitter (406 AF-Compact; earlier aircraft)	O	1
2	MS27039C1-08	Screw (or MS27039C1-09 as required to achieve 2 to 4 threads exposed)	X	2
3	S1840502-01*	Bracket – Mounting (ELT)	X	1
4	MS3367-7-0	Ty-Rap	X	A/R
5	MS21919WDG16	Clamp	X	2
6	F020-1	Upper Frame (Ref)		
7	NAS1149F0316P	Washer	X	6
8	D210-3	Nut	X	3
9	MS21919WDG18	Clamp	X	1
10	MS3367-7-9	Ty-Rap	X	A/R
11	—	Strap (included with item 3)	O	1
12	D693-4	Strap Assembly	X	1
13	5225395-6	Plug	X	2
	B274-518	Cable	X	A/R
14	A837-10	Harness Assembly	X	1
15	B263-14	Housing	X	1
	B263-1	Pin	X	3
16	—	Wires (Ref; -1849, -1850, and 1851)		
17	—	Mount – LED	O	1
18	—	Nut	O	2
19	—	Lockwasher	O	1
20	—	Panel	O	1
21	F444-1	Cover – Cyclic Control Assembly (Ref)		
22	—	Ring	X	1
23	—	Nut	O	1
24	—	LED (bi-polar, red)	X	1
25	B158-1	Heat Shrink	X	A/R
26	—	Switch (remote control, 3-position, locking)	O	1
27	F837-3	Switch Assembly (Incl items 17 thru 20; 22 thru 26, 28, 29 and wires; assembled)	X	1
28	—	Production Stamp	O	1
29	B263-14	Housing	X	1
	B263-1	Pin	X	3

NOTES * Kannad part no.

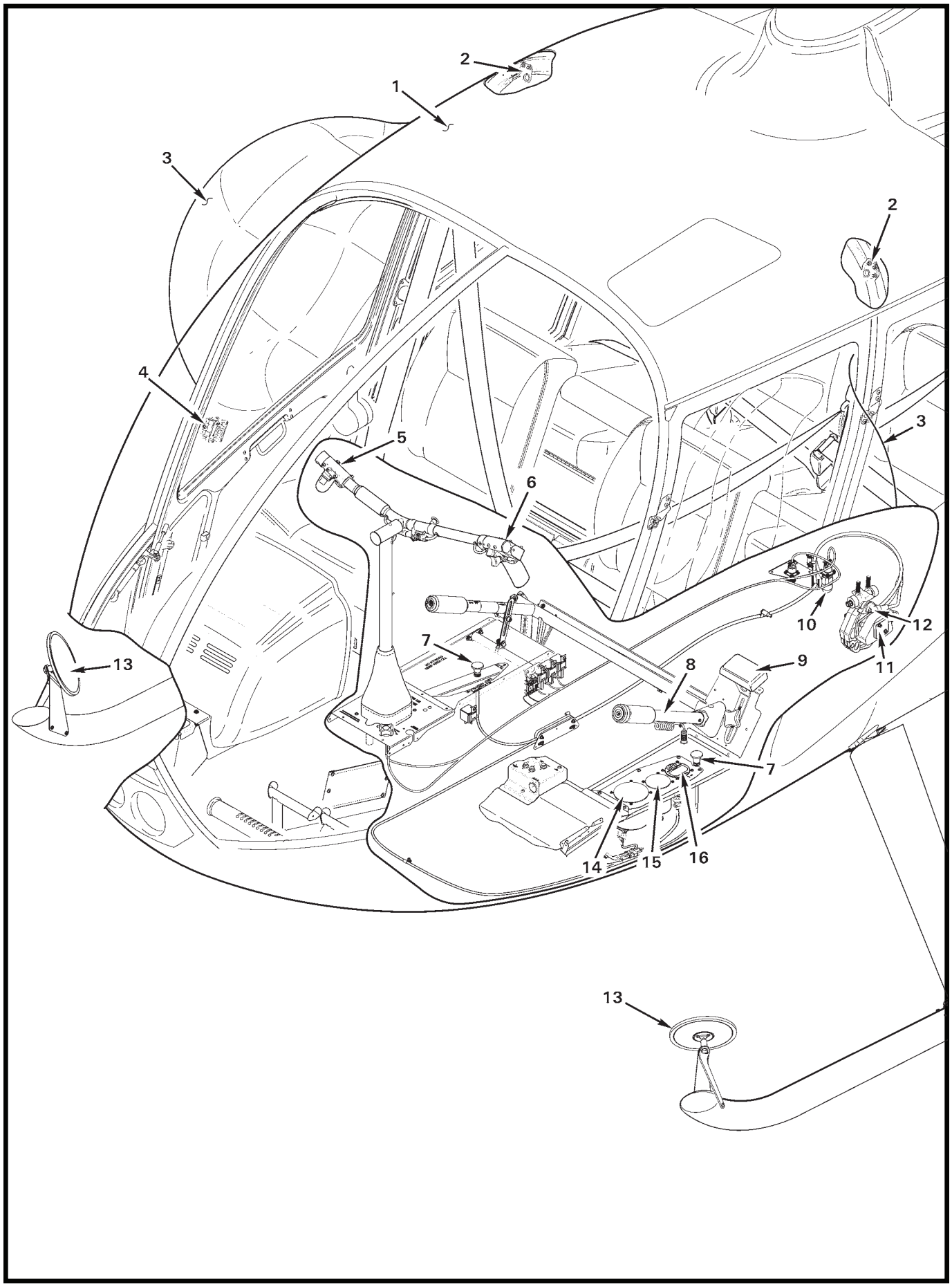

FIGURE 25-25 CARGO HOOK INSTALLATION

FIGURE AND INDEX NUMBER	PART NUMBER	DESCRIPTION	PARTS AVAIL	QTY PER ASSY
		CARGO HOOK INSTALLATION		
25-25-1	G132-4	R66 Cargo Hook Installation – Advanced (Incl items 2 thru 16; equipment is standard unless otherwise noted.)		
2	G949-1	Hardpoint Installation – Cabin Interior (Ref, optional; see Figure 25-31)		
3	G142-1 & -2	Door Assembly Installation (Ref, optional; see Figure 25-31)		
4	D580-5 & -6	Fan Assembly (Ref, optional; see Figure 25-31)		
5	C058-12	Grip Assembly – Cyclic (Ref; see Figure 25-39)		
	C058-18	Grip Assembly – Cyclic (Ref, w/autopilot; see Figure 25-39)		
6	C058-13	Grip Assembly – Cyclic (Ref; see Figure 25-43)		
	C058-19	Grip Assembly – Cyclic (Ref, w/autopilot; see Figure 25-43)		
7	A522-15 & 16	Control – Cargo Hook Mechanical Release (Ref; see Figures 25-35 and 25-39)		
8	C758-4	Removable Collective (Ref, with start button; see Figure 25-43)		
9	G135-7	Support Assembly (Ref, see Figure 25-35)		
10	G140-3	Harness Assembly – External Load (Ref; see Figure 25-27)		
11	528-029-00*	Cargo Hook (Ref; see Figure 25-27)		
12	—	Load Cell (Ref; see Figure 25-27)		
13	G141-1 & -2	Skid Mirror Installation (Ref, optional; see Figure 25-31)		
14	—	Torque Meter (Ref, see Figure 25-35)		
15	—	MGT Meter (Ref, see Figure 25-35)		
16	—	Load Meter (Ref, see Figure 25-35)		

NOTES * Onboard Systems part no,

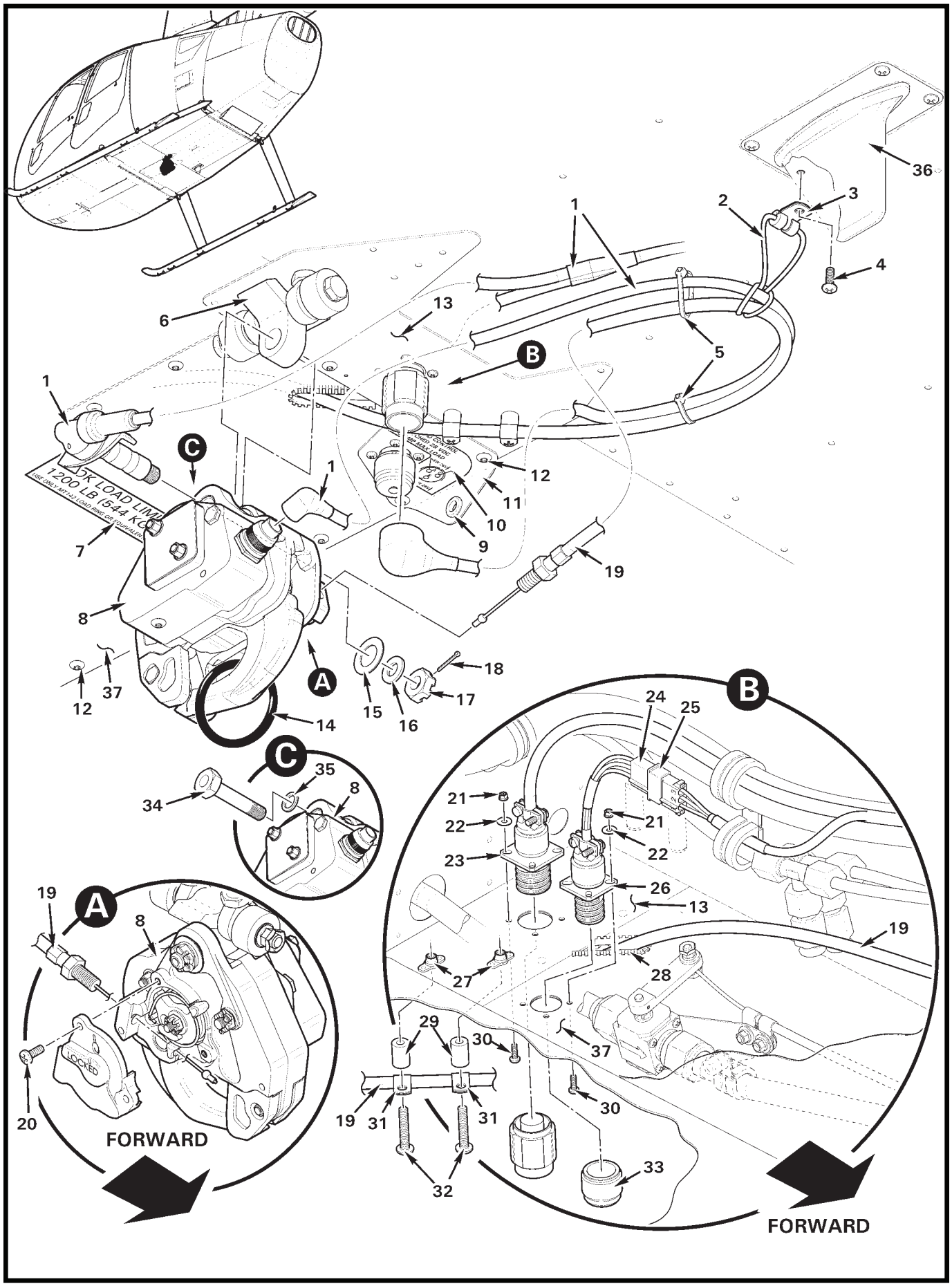
36
3
2
1
4
13
6
5
B
1
C
12
1
11
10
9
7
19
8
18
A
37
12
15
16
17
14
C
35
8
34
B
24
25
21
22
21
22
23
26
13
19
27
28
29
30
37
19
31
31
30
20
32
33
A
19
8
LOCKED
FORWARD
FORWARD

FIGURE AND INDEX NUMBER	PART NUMBER	DESCRIPTION	PARTS AVAIL	QTY PER ASSY
		CARGO HOOK – INSTALLATION		
25-27-1	G140-6	Harness Assembly (electronic hook release, not shown)	X	1
	G140-7	Harness Assembly (electronic hook release, with load cell)	X	1
2	A215-149	O-ring	X	1
3	MS21919WDG2	Clamp	X	1
4	MS27039C0807	Screw (replaces existing screw)	X	1
5	MS3367-5-0	Ty-rap	X	2
6	G137-1	Hardpoint Hinge Assembly (Ref, see Figure 10-5)		
7	F654-44	Decal – "HOOK LOAD LIMIT 1200 LB (544 KG)..."	X	1
8	528-029-00*	Cargo Hook (Incl item 20; attach using items 15 thru 18, 34 and 35 if G140-1 installed)	X	1
9	NAS557-6A	Grommet	X	1
10	F654-47	Decal – "EXT LOAD CONTROL..."	X	2
11	G135-6	Angle	X	1
12	B526-6	Screw (Ref; existing hardware)		
13	F382-3	Plate (Ref)		
14	MT142-1	Primary Ring	O	1
15	510-183-00	Washer	X	1
16	510-174-00	Washer	X	1
17	510-170-00	Nut	X	1
18	510-178-00	Cotter Pin	X	1
19	D676-3	Cable Assembly	X	1
20	—	Screw	O	2
21	MS21042L04	Nut	X	8
22	NAS1149FN416P	Washer	X	8
23	G140-1	Harness Assembly (electronic hook release, basic installation)	X	1
	G140-2	Harness Assembly (electronic hook release, with load cell; advanced installation)	X	1
	G140-8	Harness Assembly (optional, electronic hook release, with load cell, basic installation)	X	1
24	B263-14	Housing	X	1
	B263-1	Pin	X	3
25	B263-15	Housing	X	1
	B263-2	Socket	X	3
26	G140-3	Harness Assembly	X	1
27	MS21069L08	Nutplate	X	2
28	A225-2	Grommet	X	A/R

NOTES * Onboard Systems part no.

Continues

FIGURE AND INDEX NUMBER	PART NUMBER	DESCRIPTION	PARTS AVAIL	QTY PER ASSY
		CARGO HOOK – INSTALLATION (Cont'd)		
25-27-29	A130-38	Spacer	X	2
30	MS23506-215	Screw	X	8
31	AN742-4	Clamp	X	2
32	MS27039C0816	Screw	X	2
33	FTC-4	Cap (labeled "FC-4")	X	1
34	290-332-00*	Bolt (used if load cell not installed, basic installation)	X	1
35	510-144-00*	Washer	X	1
36	CI-105-16	Antenna – Transponder (Ref; see Figure 6-19)		
37	F794-2	Panel (Ref)		

NOTES * Onboard Systems part no.

Intentionally Blank

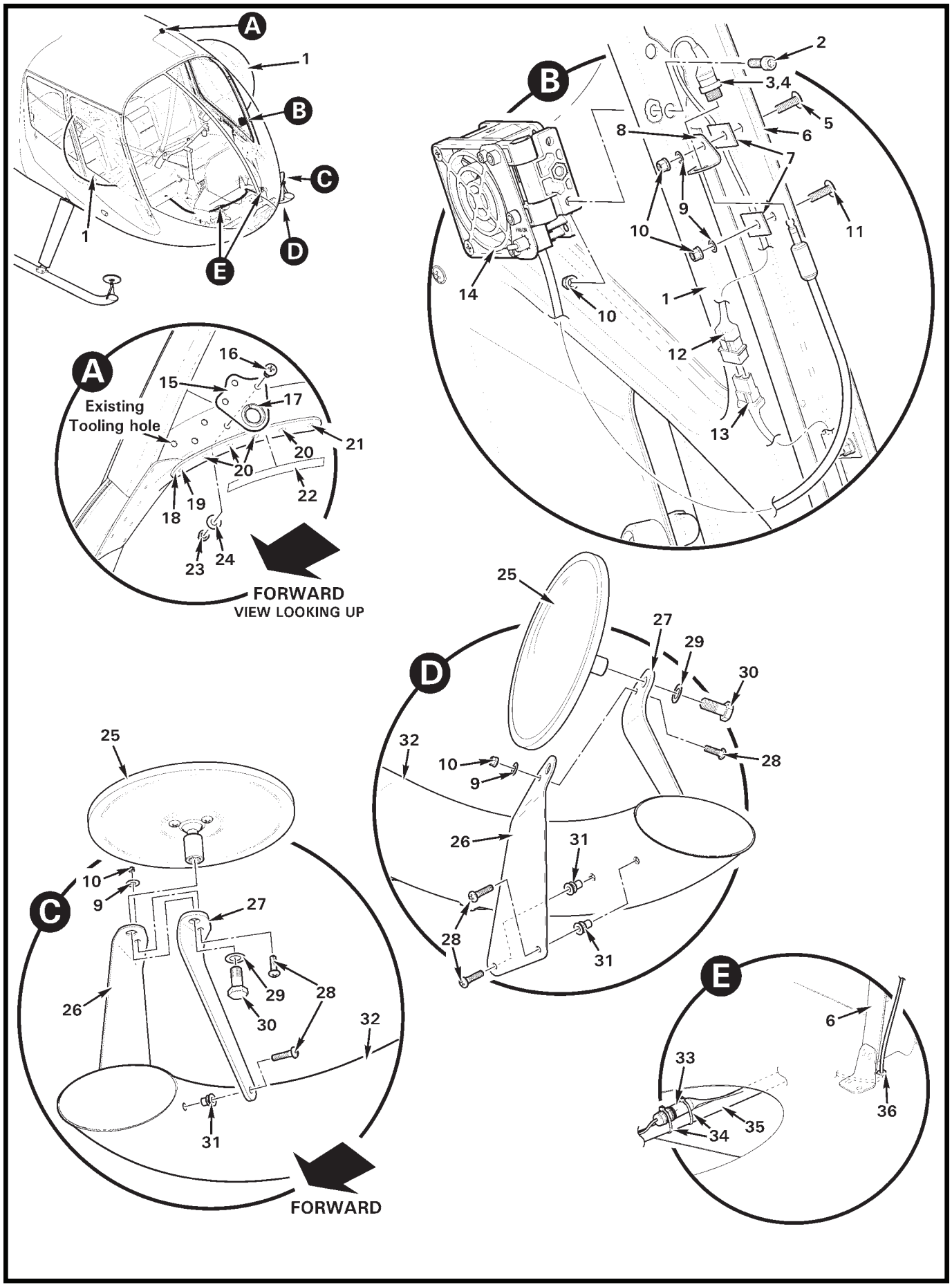
A
1
B
C
D
E
1
2
3,4
5
6
7
8
9
10
11
1
12
13
14
10
16
15
17
Existing
Tooling hole
21
20
20
22
18
19
23
24
FORWARD
VIEW LOOKING UP
25
27
29
30
28
32
10
9
26
31
28
31
25
10
9
27
26
29
28
30
32
31
FORWARD
6
33
36
35
34

FIGURE AND INDEX NUMBER	PART NUMBER	DESCRIPTION	PARTS AVAIL	QTY PER ASSY
		CARGO HOOK – DETAILS		
25-31-1	C026-005	Large Bubble Door Assembly – Forward LH (Ref; see Figure 52-1)		
	C026-006	Large Bubble Door Assembly – Forward RH (Ref; see Figure 52-1)		
2	NAS1352-08-8	Screw	X	2
3	G140-9	Harness Assembly (includes items 4, 12, B266-4 sleeving, and B158 heat shrink)	X	1
4	712A	Receptacle	X	1
5	AN526C832R9	Screw	X	1
6	C238	Jamb (Ref)		
7	D098-6	Tab	X	4
8	G145-3	Angle – LH	X	1
	G145-4	Angle – RH	X	1
9	NAS1149FN816P	Washer	X	5
10	MS21042L08	Nut	X	7
11	AN526C832R8	Screw	X	3
12	B263-32	Housing	X	1
	B263-1	Pin	X	2
13	B263-33	Housing (Ref)		
	B263-2	Socket (Ref)		
14	D580-5	Fan Assembly – LH	X	1
	D580-6	Fan Assembly – RH	X	1
15	G949-2	Ring		
16	MS27039C1-06	Screw	X	3
17	NAS557-8A	Grommet	X	1
18	G949-3	Doubler	X	1
19	NAS9301B-5-05	Rivet	X	1
20	MS20426AD4	Rivet	X	4
21	MS20470AD4	Rivet	X	1
22	G654-2	Decal – “Safety Harness Attach Point...”	X	1
23	D210-3	Nut	X	3
24	NAS1149F0332P	Washer	X	3
25	97819	Mirror (Incl items 28 and 29)	X	1
26	G138-5	Support – LH	X	1
	G138-6	Support – RH	X	1

NOTES

Continues

FIGURE AND INDEX NUMBER	PART NUMBER	DESCRIPTION	PARTS AVAIL	QTY PER ASSY
		CARGO HOOK – DETAILS (Cont'd)		
25-31-27	G138-7	Strap – LH	X	1
	G138-8	Strap – RH	X	1
28	MS27039C0808	Screw	X	4
29	—	Lockwasher	O	1
30	—	Bolt	O	1
31	NAS1329H08K	Rivet Nut	X	3
32	F014	Landing Gear (Ref)		
33	D262-11	Fuse Holder	X	1
	AGC-1-R	Fuse	X	1
34	MS3367-5-9	Ty-rap	X	A/R
35	A780-70	Cable Assembly (Ref)		
36	MS35489-4	Grommet	X	1

NOTES

Intentionally Blank

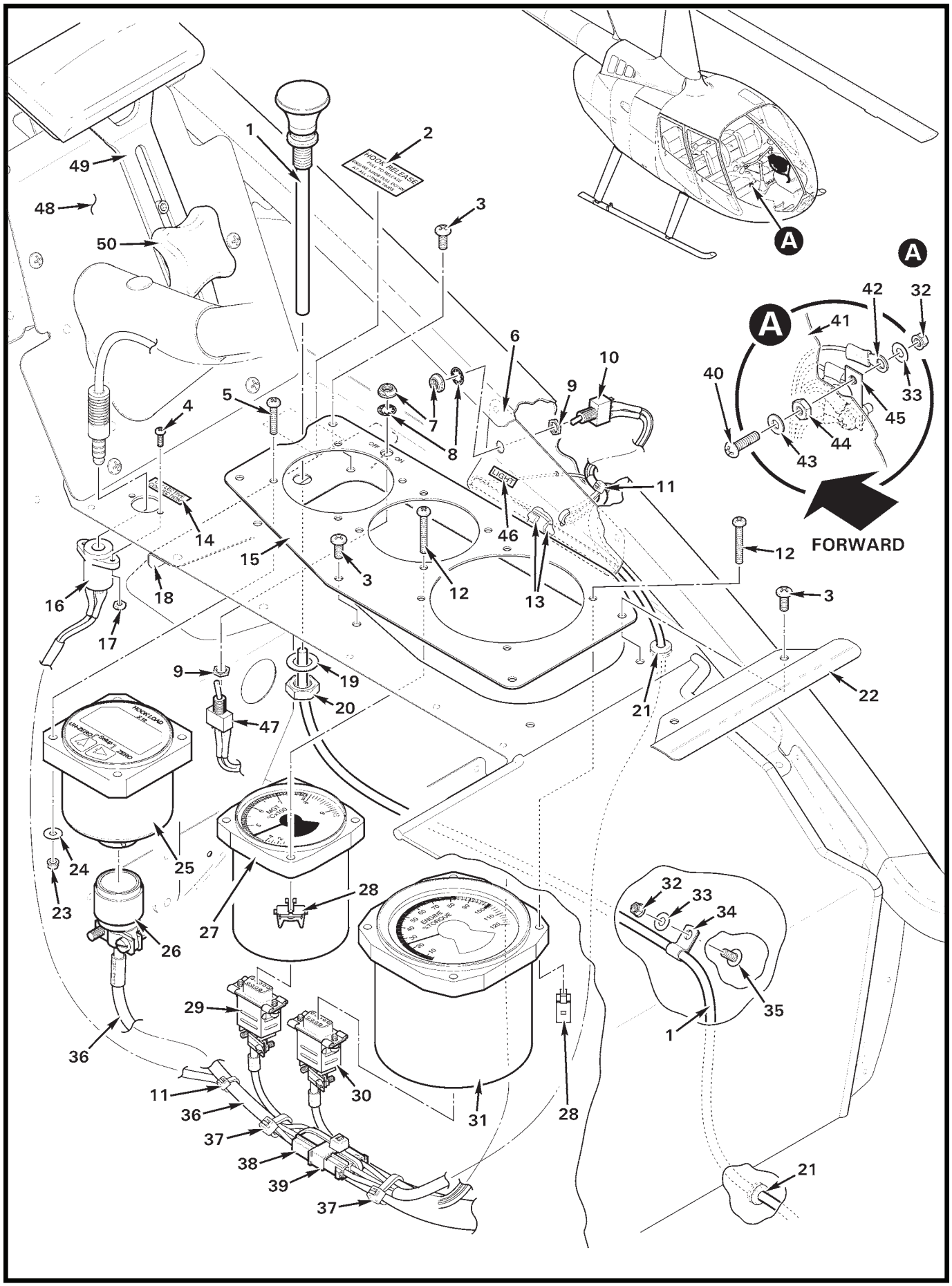

FIGURE 25-35 CARGO HOOK – LEFT SIDE DETAILS

FIGURE AND INDEX NUMBER	PART NUMBER	DESCRIPTION	PARTS AVAIL	QTY PER ASSY
		CARGO HOOK – LEFT SIDE DETAILS		
25-35-1	A522-16	Control (manual cargo hook release)	X	1
2	G654-13	Decal – "HOOK RELEASE..."	X	1
3	MS27039C0806	Screw	X	5
4	MS35206-215	Screw	X	2
5	MS35206-232	Screw	X	4
6	G196-4	Light Assembly (includes items 10, 11 [1], 13, sealant, heat shrink and wires)	X	1
7	B227-4	Dress Nut	X	2
8	B227-3	Lockwasher	X	2
9	—	Nut	O	1
10	B300-3	Switch Assembly (Incl items 7 thru 9)	X	2
11	MS3367-4-9	Ty-rap	X	A/R
	MS3367-5-9	Ty-rap	X	A/R
12	MS35206-234	Screw	X	8
13	G196-5	LED Strip	X	2
14	G654-4	Decal – "COLLECTIVE CONNECTION"	X	1
15	G138-4	Face	X	1
16	TJ-120	Jack	X	1
17	B330-2	Palnut	X	2
18	G138-2	Support Assembly	X	1
19	—	Washer	O	1
20	—	Nut	O	1
21	MS35489-4	Grommet	X	2
22	G135-5	Cover	X	1
23	MS21042L06	Nut	X	4
24	NAS1149FN616P	Washer	X	4
25	210-095-00*	Load Meter	X	1
26	MS3126F14-15S	Plug	X	1
27	T1221MK900C010	MGT Meter	X	1
28	MS33737-15C	Nut – Instrument	X	8
29	B269-4	Receptacle	X	1
	B269-21	Backshell	X	1
30	G140-4	Harness Assembly	X	1
31	F600-2	Torque Meter	X	1
32	MS21042L08	Nut	X	3

NOTES * Onboard Systems part no.

Continues

FIGURE AND INDEX NUMBER	PART NUMBER	DESCRIPTION	PARTS AVAIL	QTY PER ASSY
		CARGO HOOK – LEFT SIDE DETAILS (Cont'd)		
25-35-33	NAS1149FN816P	Washer	X	3
34	AN742-3	Clamp	X	1
35	AN526C832R8	Screw	X	1
36	G140-2	Harness Assembly	X	1
37	MS3367-7-9	Ty-rap	X	A/R
38	B263-14	Housing	X	1
	B263-1	Pin	X	3
39	B263-15	Housing	X	1
	B263-2	Socket	X	3
40	B567-43	Screw	X	2
41	F293-1	Panel – LH (Ref)		
42	B260-3	Terminal	X	A/R
43	NAS1149DN832H	Washer	X	2
44	B301-8	Nut	X	2
45	A448-3	Bus Bar	X	1
46	F654-48	Decal – "LIGHT"	X	1
47	B049-9	Switch Assembly (load cell meter)	X	1
48	G135-8	Cover Assembly	X	1
49	G135-7	Support Assembly	X	1
50	2454K71	Knob	X	1

NOTES

Intentionally Blank

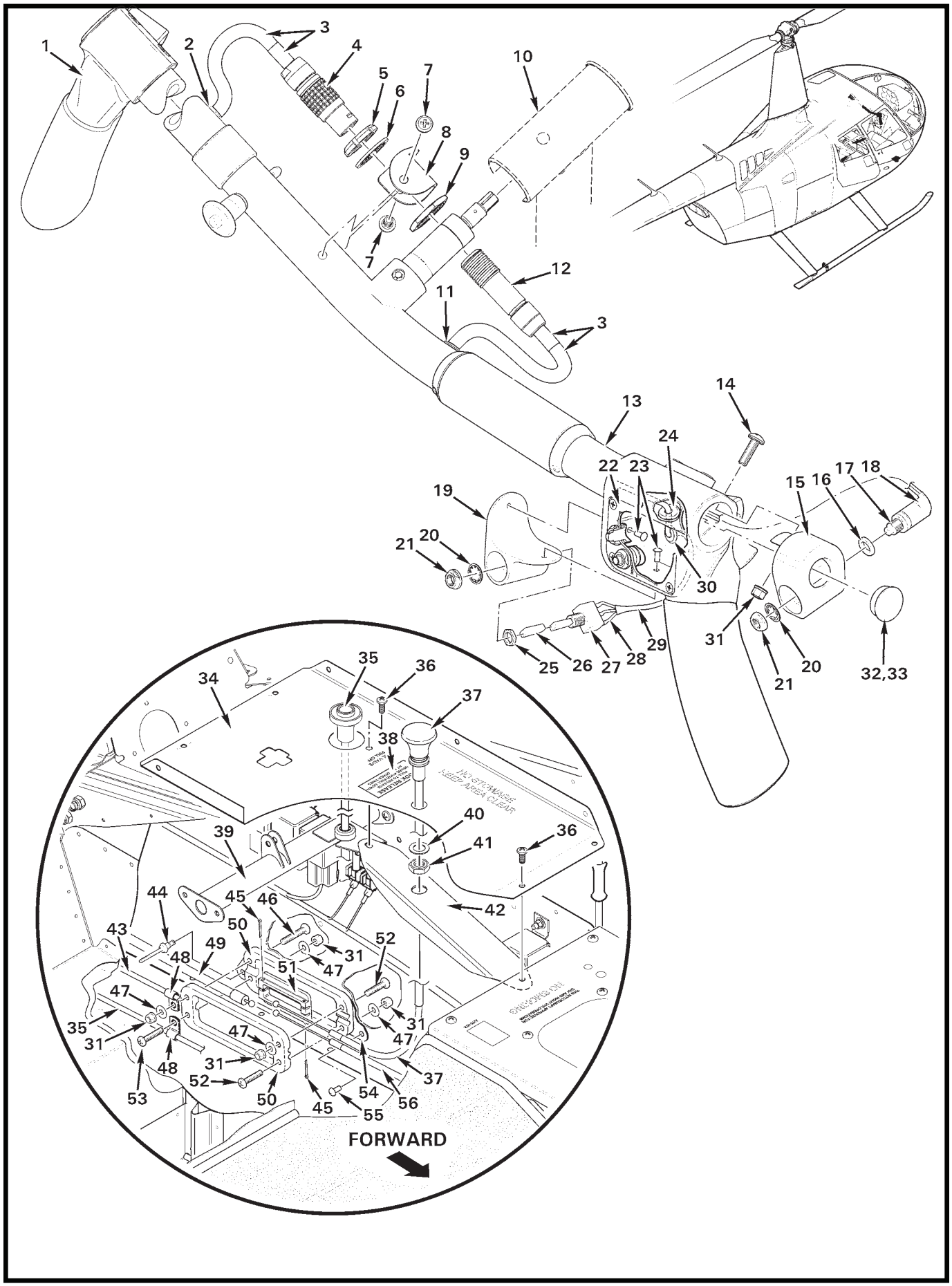
1
2
3
4
5
6
7
8
9
10
11
12
13
14
15
16
17
18
19
20
21
22
23
24
25
26
27
28
29
30
31
32,33
34
35
36
37
38
39
40
41
42
43
44
45
46
47
48
49
50
51
52
53
54
55
56
FORWARD

FIGURE AND INDEX NUMBER	PART NUMBER	DESCRIPTION	PARTS AVAIL	QTY PER ASSY
		CARGO HOOK – RIGHT SIDE DETAILS		
25-39-1	C058-9	Grip Assembly – Cyclic (Ref, Co-pilot; see also Figure 67-11.)		
	C058-19	Grip Assembly – Cyclic (Ref, Co-pilot, with autopilot. See also Figure 67-11.)		
2	G1038	Grommet	X	1
3	B158-4	Heat Shrink	X	A/R
4	FGG2B314KLAD62	Plug	X	5
5	—	Nut	O	1
6	—	Washer	O	1
7	MS35206-242	Screw	X	2
8	G136-7	Housing	X	1
9	—	Nut	O	1
10	C069	Cyclic Control System (Ref)		
11	G1042	Grommet	X	1
12	PFG2B314KLLD62	Receptacle (Incl items 5, 6, and 9)	X	1
13	C058-12	Grip Assembly – Cyclic (Pilot/Co-Pilot, includes item 1 [C058-9]. Ref, see also Figure 67-11.)		
	C058-18	Grip Assembly – Cyclic (Pilot/Co-Pilot, with autopilot. Includes item 1 [C058-19]. Ref, see also Figure 67-11.)		
14	MS27039C0808	Screw	X	1
15	G136-1	Housing	X	1
16	94773A770	Washer	X	1
17	B227-2	Switch Assembly (Incl items 16, 20, and 21)	X	1
18	B158-6	Heat Shrink	X	A/R
19	G136-3	Housing	X	2
20	B227-3	Lockwasher	X	1
21	B227-4	Dress Nut	X	1
22	C214-24	Plate	X	1
	C214-27	Plate (w/autopilot)	X	1
23	MS20470AD3	Rivet	X	2
24	NAS557-6A	Grommet	X	1
25	—	Nut (5/16 inch)	O	1
26	D443-6	Boot	X	1
27	B300-7	Switch Assembly (Incl item 20, 21, and 25)	X	1
28	B158-2	Heat Shrink	X	A/R
29	B158-3	Heat Shrink	X	A/R
30	MS35489-1	Grommet	X	1

NOTES

Continues

FIGURE AND INDEX NUMBER	PART NUMBER	DESCRIPTION	PARTS AVAIL	QTY PER ASSY
		CARGO HOOK – RIGHT SIDE DETAILS (Cont'd)		
25-39-31	MS21042L08	Nut	X	5
32	1690	Plug (install using item 31)	X	1
33	B270-15	Adhesive	X	A/R
34	F445	Cover Assembly (Ref)		
35	A522-11	Control – Fuel Shutoff Valve (Ref)		
36	MS27039C0806	Screw	X	3
37	A522-15	Control (hook release; includes items 38 and 39)	X	1
38	G654-13	Decal	X	1
39	F348-1	Anchor Assembly (Ref)		
40	—	Washer	O	1
41	—	Nut	O	1
42	G138-1	Support	X	1
43	A522-14	Control (Ref, cabin heat)		
44	NAS9301B-4-01	Rivet	X	1
45	MS24665-134	Cotter Pin	X	2
46	MS27039C0815	Screw	X	1
47	NAS1149FN816P	Washer	X	2
48	AN742-3	Clamp (Ref)		
49	D676-3	Cable Assembly (Ref, see Figure 25-27)		
50	G135-2	Clamp	X	2
51	G135-1	Splitter	X	1
52	MS27039C0813	Screw	X	2
53	MS27039C0814	Screw	X	1
54	G135-3	Plate Assembly	X	1
55	MS20470AD4	Rivet	X	1
56	A522-16	Control (Ref; hook release, left seat, see Figure 25-35)		

NOTES * Onboard Systems part no.

Intentionally Blank

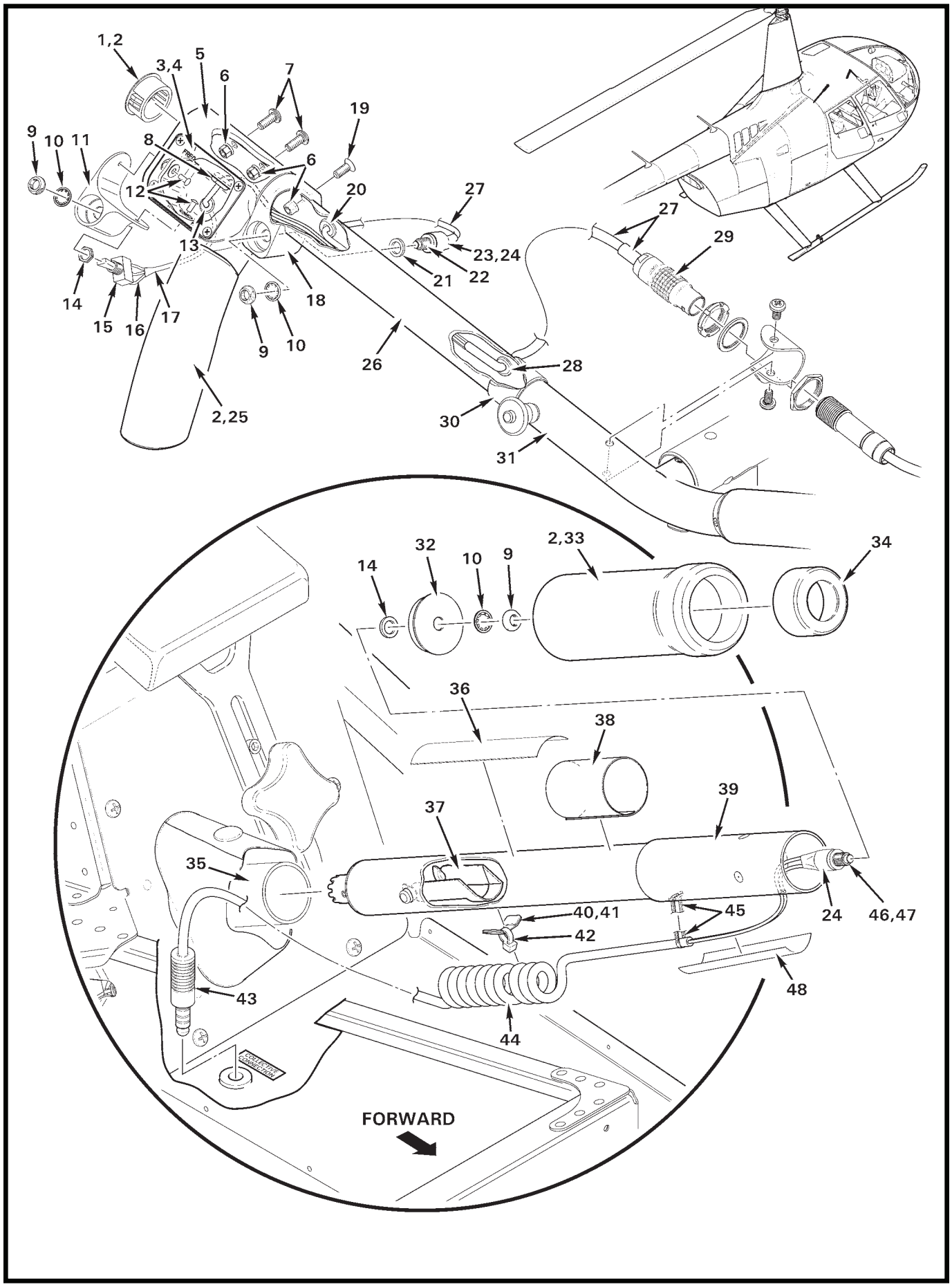
1,2
3,4
5
6
7
19
9
10
11
8
6
12
20
27
27
13
23,24
29
21
22
14
18
15
16
17
9
10
26
28
2,25
30
31
2,33
32
14
10
9
34
36
38
39
37
35
40,41
45
24
46,47
42
43
48
44
FORWARD

FIGURE AND INDEX NUMBER	PART NUMBER	DESCRIPTION	PARTS AVAIL	QTY PER ASSY
		CARGO HOOK – LEFT SEAT FLIGHT CONTROLS		
25-43-1	2703	Plug (install using item 2)	X	1
2	B270-15	Adhesive	X	A/R
3	C214-24	Plate	X	1
4	C214-27	Plate (w/autopilot)	X	1
5	D379-1	Grip	X	1
6	MS21042L08	Nut	X	3
7	MS27039C0806	Screw	X	2
8	NAS557-6A	Grommet	X	1
9	B227-4	Dress Nut	X	1
10	B227-3	Lockwasher	X	1
11	G136-3	Housing	X	1
12	MS20470AD3	Rivet	X	2
13	MS35489-1	Grommet	X	1
14	—	Nut (5/16 inch)	O	1
15	B300-7	Switch (Incl items 9, 10, and 14)	X	1
16	B158-2	Heat Shrink (covers wires)	X	A/R
17	B158-3	Heat Shrink (around covered wires)	X	A/R
18	G136-2	Housing	X	1
19	MS24694-S3	Screw	X	A/R
20	MS35489-33	Grommet	X	1
21	94773A770	Washer	X	1
22	B227-2	Switch (Incl items 9, 10, and 21)	X	1
23	B158-2	Heat Shrink (around wires, not shown)	X	A/R
24	B158-6	Heat Shrink (around covered wires)	X	A/R
25	D379-2	Cover (install item 2)	X	1
26	C058-13	Grip Assembly – Cyclic (Incl items 1 thru 3, 5 thru 8, 13, 15 thru 20, 22 thru 25, and 27 thru 30)	X	1
	C058-19	Grip Assembly – Cyclic (w/autopilot; includes items 1, 2, 4 thru 8, 13, 15 thru 20, 22 thru 25, and 27 thru 30)	X	1
27	B158-4	Heat Shrink	X	A/R
28	G1038	Grommet	X	1
29	FGG2B314KLAD62	Plug	X	1
30	A321-22	Collar	X	1
31	C058	Grip Assembly – Cyclic (Ref, RH pilot; see Figure 25-39)		
32	B252-9	Mount	X	1

NOTES

Continues

FIGURE AND INDEX NUMBER	PART NUMBER	DESCRIPTION	PARTS AVAIL	QTY PER ASSY
		CARGO HOOK – LEFT SEAT FLIGHT CONTROLS (Cont'd)		
25-43-33	A601-1	Grip (install using item 2)	X	1
34	A959-2	Cap (install using item 2)	X	1
35	C758-1	Stick Assembly (Ref; pilot)		
36	A654-21	Decal	X	1
37	A795-7	Pin	X	1
38	G654-3	Decal	X	1
39	C758-4	Stick Assembly – Collective (co-pilot; includes items 2, 32 thru 34, 36 thru 38, 40, 42 thru 46, and 48)	X	1
40	B252-10	Anchor Assembly (Incl item 41)	X	1
41	A701-7	Tape (black foam; self adhesive)		
42	MS3367-4-0	Ty-rap	X	1
43	TP-120	Plug	X	1
44	WMEC222-CL	Cable	X	1
45	B268-3	Lacing Tape	X	A/R
46	B280-5	Switch Assembly (Incl items 24 and 47)	X	1
47	B227-2	Switch (Incl items 9, 10, and 14)	X	1
48	A701-1	Tape	X	A/R

NOTES

Intentionally Blank

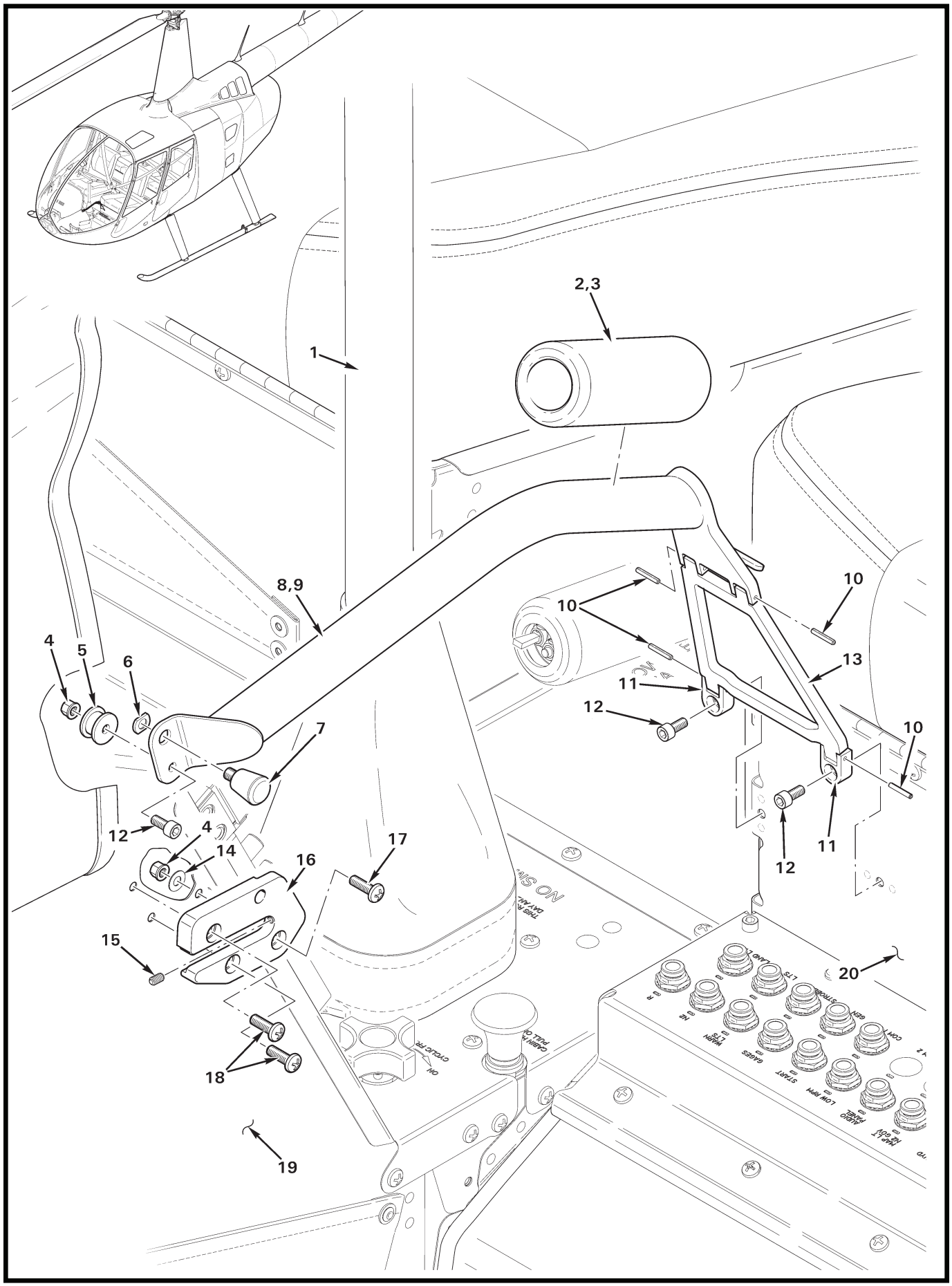
1
2,3
4
5
6
7
8,9
10
10
10
11
11
12
12
12
13
14
15
16
17
18
19
20

FIGURE AND INDEX NUMBER	PART NUMBER	DESCRIPTION	PARTS AVAIL	QTY PER ASSY
		GUARD ASSEMBLY INSTALLATION		
25-47-1	C069	Cyclic Control Assembly (Ref)		
2	A601-2	Grip (install using item 3)	X	1
3	B270-15	Adhesive	X	A/R
4	MS21042L08	Nut	X	2
5	G722-7	Latch	X	1
6	—	Sleeve (threaded; Ref)		
7	56-99-196-20	Plunger (Incl item 6)	X	1
8	G721-1	Guard Assembly (Incl items 2 thru 5, 7, 9 thru 11, and 13)	X	1
9	G721-2	Weldment	X	1
10	MS16562-15	Spring Pin	X	4
11	G722-5	Mount	X	2
12	NAS1352-08-6	Screw	X	3
13	G722-4	Support – Lower	X	1
14	NAS1149FN816P	Washer	X	1
15	R3592*	Set Screw (6-32 x 1/4)	X	1
16	G722-6	Plate	X	1
17	MS27039C0807	Screw	X	1
18	MS27039C0808	Screw	X	2
19	F033	Console Assembly – Lower (Ref)		
20	F297-2	Support Assembly (LH, forward; Ref)		

NOTES * Adjust set screw to limit fwd/aft movement to 0.015 inch max and allow spring pin to fully engage.

Intentionally Blank

CHAPTER 28

FUEL SYSTEM

Figure	Title	Page
28-1	Fuel Bladder Assembly	28.0
28-5	Fuel Bladder Assembly – Aft Components	28.4
28-7	Low Fuel Switch and Drain Assembly Installation	28.6
28-9	Fuel Valve and Hoses Installation	28.8
28-13	Large Auxiliary Fuel Tank Installation	28.12
28-15	Large Auxiliary Fuel Tank Assembly	28.14
28-19	Large Auxiliary Fuel Tank – Components	28.18
28-21	Small Auxiliary Fuel Tank Installation	28.20
28-23	Small Auxiliary Fuel Tank Assembly	28.22
28-27	Small Auxiliary Fuel Tank – Components	28.26
28-29	Auxiliary Fuel Tank – Hose Installation	28.28
28-31	Auxiliary Fuel Tank – Electrical Components	28.30
28-35	Auxiliary Fuel Tank – Electrical Components	28.34
28-37	Pressure Fueling System – Main Fuel Port	28.36
28-41	Pressure Fueling System – Shut-off Valve Assemblies	28.40
28-43	Pressure Fueling System – Pressure Fuel Port	28.42
28-45	Pressure Fueling System – Electrical Components	28.44
28-49	Pressure Fueling System – Electrical Components	28.48

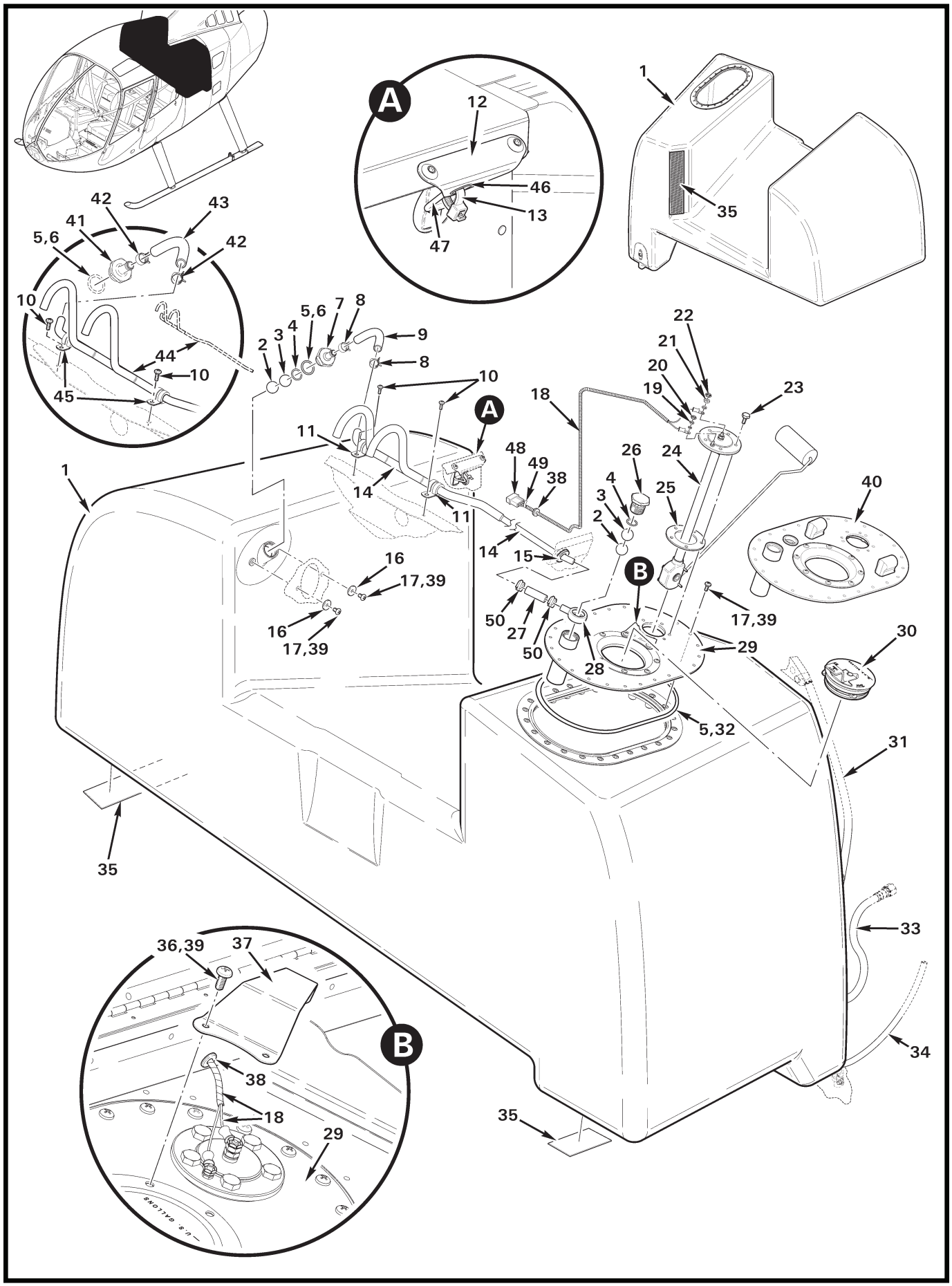
A
12
46
13
47
1
35
42
43
41
5,6
42
10
44
10
45
5,6
7
8
2
3
4
9
8
10
10
A
11
14
11
48
49
38
18
22
21
20
19
23
26
24
4
3
2
25
40
1
14
15
16
17,39
B
50
27
50
28
17,39
29
30
16
17,39
5,32
31
35
33
36,39
37
B
38
18
29
35
34
U.S. GALLONS

FIGURE AND INDEX NUMBER	PART NUMBER	DESCRIPTION	PARTS AVAIL	QTY PER ASSY
		FUEL BLADDER ASSEMBLY		
28-1-1	G028-1	Bladder Assembly (Incl item 35)	X	1
2	B208-6	Ball (red anodized)	X	2
3	B208-5	Ball (gold alodine; earlier balls were blue)	X	2
4	A215-015	O-Ring	X	2
5	A257-6	Grease	X	A/R
6	MS29512-10	Packing (o-ring; install using item 5)	X	2
7	G254-2	Fitting	X	2
8	D277-10	Clamp	X	4
9	A729-82	Tube	X	1
10	MS27039C0807	Screw	X	2
11	MS21919WDG8	Clamp	X	2
12	G915-5	Tab (Ref)		
13	MS3367-7-9	Ty-Rap	X	1
14	F731-6	Vent Weldment	X	1
15	MS35489-11	Grommet	X	1
16	A141-17	Washer	X	2
17	MS27039C1-06	Screw (install using item 39)	X	26
18	F049-04	Harness Assembly (fuel sender; includes items 38, 48, & 49)	X	1
19	44-121*	Nut (small; supplied with sender)	O	2
20	B330-5	Palnut (small)	X	1
21	0044-00408*	Nut (large)	O	2
22	B330-6	Palnut (large)	X	1
23	B289-4	Bolt (includes O-ring)	X	5
	5-108 N674-70**	O-ring	O	A/R
24	F550-1	Fuel Quantity Sender (Incl items 19, 21, and 25)	X	1
25	0015-00423	Gasket (supplied with sender; spares available)	X	1
26	G254-6	Retainer	X	1
27	A729-65	Tube	X	1
28	G254-7	Fitting	X	1
29	F250-1***	Cover Assembly (for ships without optional aux fuel tank)	X	1
30	F689-1	Cap (fuel)	X	1
31	A729-44	Tube (Ref, see Figure 28-5)		
32	MS29513-270	Packing (o-ring, install using item 5)	X	1
33	D205-21	Hose Assembly (Ref, see Figure 28-9)		
34	A729-43	Tube (drain; Ref, see Figure 28-5)		

NOTES
* Rochester Gauges, Inc. part no.
** Parker O-ring part number.
*** Refer to Figure 28-37 for ships with optional pressure fueling system.

Continues

FIGURE AND INDEX NUMBER	PART NUMBER	DESCRIPTION	PARTS AVAIL	QTY PER ASSY
		FUEL BLADDER ASSEMBLY (Cont'd)		
28-1-35	B175-3	Hook Tape	X	A/R
36	MS27039C1-07	Screw (install using item 39)	X	2
37	G271-1	Guard	X	1
38	MS35489-4	Grommet	X	1
39	A257-9	Anti-seize	X	A/R
40	F250-10*	Cover Assembly (for ships with optional aux fuel tank)	X	1
41	G254-2**	Fitting	X	1
42	D277-8**	Clamp	X	2
43	A729-39**	Tube	X	1
44	F731-4	Vent Weldment (earlier R66s)	X	1
45	MS21919WDG6**	Clamp	X	2
46	NAS557-6A	Grommet	X	1
47	35486	Hanger Tab (Ref)		
48	B263-14	Housing	X	1
	B263-1	Pin	X	3
49	B161-2	Spirap	X	A/R
50	D277-8	Clamp	X	2

NOTES * Refer to Figure 28-37 for ships with optional pressure fueling system.

** Used with item 44.

Intentionally Blank

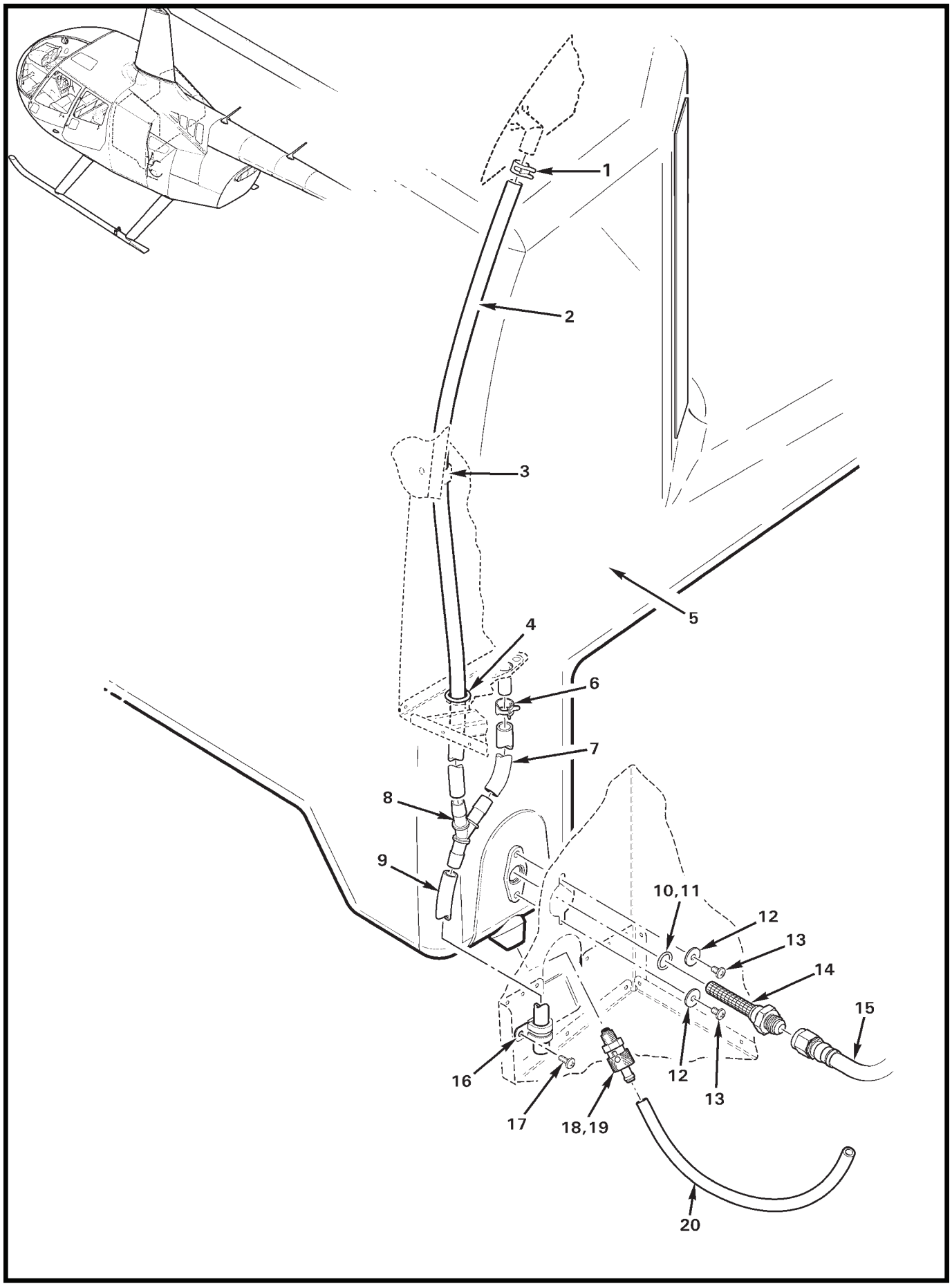
1
2
3
4
5
6
7
8
9
10,11
12
13
14
15
16
17
18,19
12
13
20

FIGURE AND INDEX NUMBER	PART NUMBER	DESCRIPTION	PARTS AVAIL	QTY PER ASSY
		FUEL BLADDER ASSEMBLY – AFT COMPONENTS		
28-5-1	D277-9	Clamp	X	1
2	A729-44	Tube	X	1
3	G258-5	Clip (Ref)		
4	NAS557-8A	Grommet	X	1
5	G028-1	Bladder	X	1
6	D277-8	Clamp	X	1
7	A729-66	Tube	X	1
8	A457-2	Wye	X	1
9	A729-39	Tube	X	1
10	MS29512-06	Packing (o-ring; install using item 11)	X	1
11	A257-6	Grease	X	A/R
12	A141-17	Washer	X	2
13	MS27039C1-06	Screw	X	2
14	B254-3	Strainer – Fuel	X	1
15	D205-21	Hose (Ref, see Figure 28-9)		
16	MS21919WDG8	Clamp	X	1
17	MS27039C0806	Screw	X	1
18	A761-2	Valve – Drain (install using item 19 on threads)	X	1
19	B270-6	Sealant	X	A/R
20	A729-43	Tube	X	1

NOTES

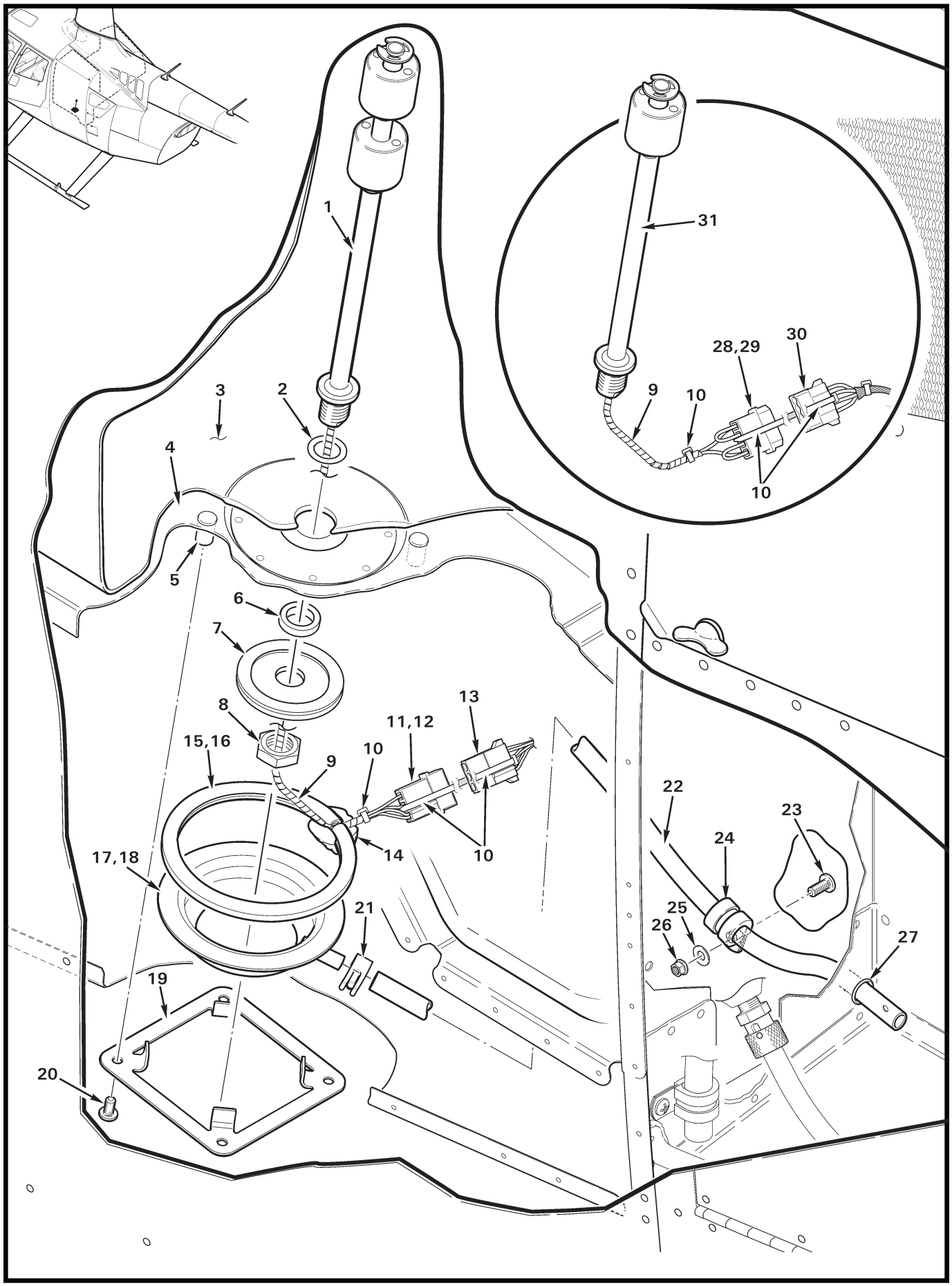
1
2
3
4
5
6
7
8
9
10
11,12
13
14
15,16
17,18
19
20
21
22
23
24
25
26
27
28,29
30
31

FIGURE AND INDEX NUMBER	PART NUMBER	DESCRIPTION	PARTS AVAIL	QTY PER ASSY
		LOW FUEL SWITCH AND DRAIN ASSEMBLY INSTALLATION		
28-7-1	A521-4	Switch Assembly – Low Fuel (dual; includes items 9,11, and 12)	X	1
2	MS29512-05	Packing (o-ring, lubricate with A257-6 grease)	X	1
3	G028-1	Bladder – Fuel Tank (Ref)		
4	G250-1	Tray (fuel tank sump, Ref)		
5	B318-1	Stand off (Ref)		
6	G915-8	Spacer	X	1
7	G915-9	Washer Assembly	X	1
8	A880-1005	Nut (or AN924-5D)	X	1
9	B161-2	Spirap	X	A/R
10	MS3367-4-9	Ty-Rap	X	2
11	B263-14	Housing	X	1
12	B263-1	Pin (pin no. 1 two wires, pin no.2 black heat shrink, pin no. 3 blue heat shrink)	X	3
13	F049-015	Harness Assembly (Ref)		
14	B270-5	Sealant (seals gap where wires pass through item 15)	X	A/R
15	A226-10	Seal (install using item 16)	X	A/R
16	B270-18	Adhesive	X	A/R
17	G930-1	Drain Assembly (Incl items 15, 16, and 18)	X	1
18	G930-2	Housing (Ref)		
19	G930-4	Retainer	X	1
20	MS27039C0805	Screw	X	4
21	D277-6	Clamp	X	A/R
22	A729-55	Tube	X	1
23	MS27039C0806	Screw	X	1
24	MS21919WDG6	Clamp	X	1
25	NAS1149FN816P	Washer	X	1
26	MS21042L08	Nut	X	1
27	NAS557-6A	Grommet	X	1
28	B263-16*	Housing	X	1
29	B263-1*	Pin (Pin 1 -58 & -196 wires, Pin 2 -196 wire, Pin 3 -61 & -197 wires, Pin 4 -197 wire)	X	2
30	F049-013*	GCU Harness Assembly (Ref, see R66 MM Chapter 98 for schematics)		
31	A521-2*	Switch Assembly – Low Fuel (single; includes items 9, 28, and 29)	X	1

NOTES * Earlier ships.

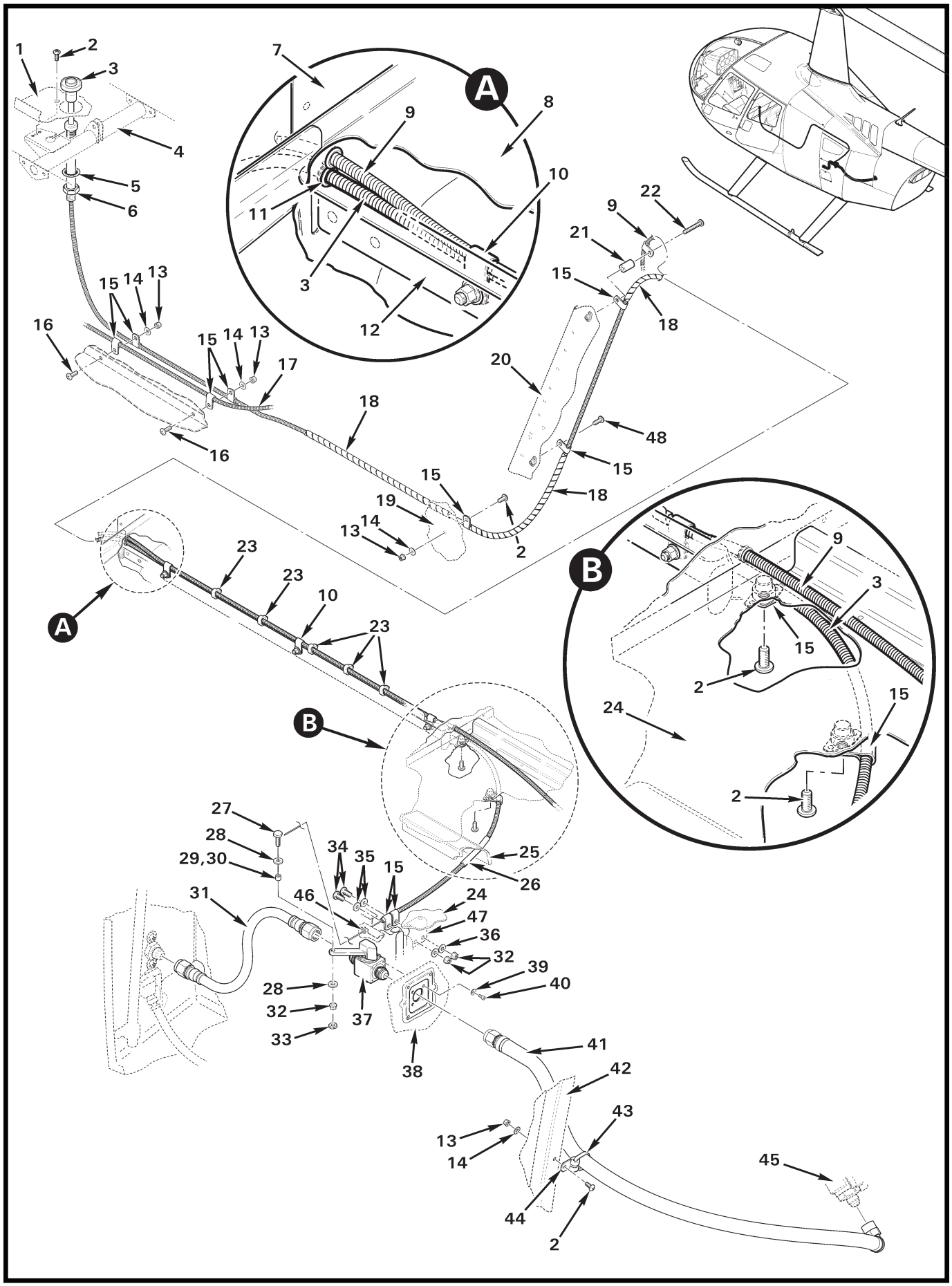
A
B
1
2
3
4
5
6
7
8
9
10
11
12
13
14
15
16
17
18
19
20
21
22
23
24
25
26
27
28
29,30
31
32
33
34
35
36
37
38
39
40
41
42
43
44
45
46
47
48

FIGURE AND INDEX NUMBER	PART NUMBER	DESCRIPTION	PARTS AVAIL	QTY PER ASSY
		FUEL VALVE AND HOSES INSTALLATION		
28-9-1	F445-1	Cover Assembly (Ref)		
2	MS27039C0806	Screw	X	5
3	A522-11	Control – Fuel Valve (Incl items 5 and 6)	X	1
4	F348-1	Anchor Assembly (Ref)		
5	—	Washer	O	1
6	—	Nut	O	1
7	F386-2	Cover (Ref)		
8	G252-1	Panel (cargo compartment ceiling, Ref)		
9	C522-11	Control (actuator, Ref)		
10	AN742-3	Clamp (Ref; secures item 9)		
11	NAS557-4B	Grommet	X	1
12	G255-3	Stiffener (Ref)		
13	MS21042L08	Nut	X	4
14	NAS1149FN816P	Washer	X	4
15	AN742-3	Clamp	X	8
16	MS27039C0808	Screw	X	2
17	A522-14	Control – Cabin Heat (Ref)		
18	B161-4	Spirap	X	A/R
19	F293-1	Panel – Keel (forward, LH; Ref)		
20	F351-1	Brace (aft seat back, LH; Ref)		
21	A130-50	Spacer	X	1
22	MS27039C0817	Screw	X	1
23	MS3367-7-9	Ty-Rap (secures items 3 and 9 together)	X	6
24	G239-1	Panel (Ref)		
25	G240-7	Channel (Ref)		
26	B158-4	Heat Shrink	X	A/R
27	A462-4	Fitting	X	1
28	NAS1149E0363R	Washer	X	2
29	A130-48	Spacer (install using item 30)	X	1
30	A257-1	Grease	X	A/R
31	D205-21	Hose Assembly	X	1
32	D210-3	Nut	X	3
33	B330-7	Palnut	X	1
34	MS27039C1-07	Screw	X	2
35	NAS1149F0363P	Washer	X	2

NOTES

Continues

FIGURE AND INDEX NUMBER	PART NUMBER	DESCRIPTION	PARTS AVAIL	QTY PER ASSY
		FUEL VALVE AND HOSES INSTALLATION (Cont'd)		
28-9-36	NAS1149F0332P	Washer	X	2
37	F670-1	Valve – Fuel Shutoff	X	1
38	F233-1	Firewall (Ref)		
39	NAS1149FN432P	Washer	X	4
40	NAS1352-04-4	Screw	X	4
41	B283-12	Hose Assembly	X	1
42	G923-1	Stiffener (Ref)		
43	MS3367-5-9	Ty-Rap	X	1
44	MS21919WDG3	Clamp	X	1
45	—	Fuel Inlet (engine; Ref)		
46	NAS557-3A	Grommet	X	1
47	G915-3	Bracket (Ref)		
48	MS27039C0809	Screw	X	1

NOTES

Intentionally Blank

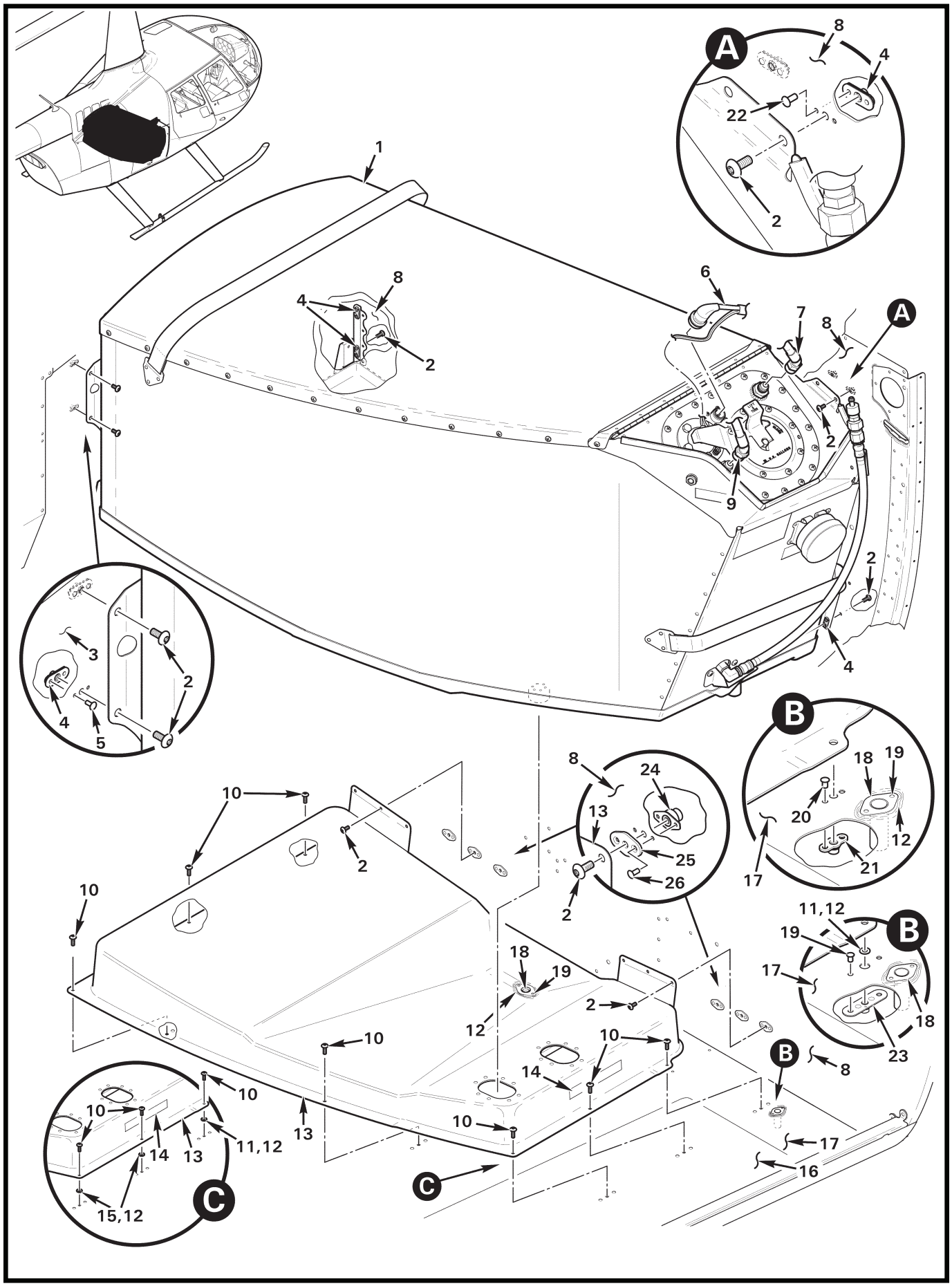
A
8
4
22
2
1
8
4
2
6
7
8
A
2
9
2
4
3
2
4
5
B
18
19
20
12
17
21
8
24
13
25
26
2
10
2
10
11,12
B
19
17
18
23
18
19
2
12
10
10
B
8
14
10
10
10
13
11,12
14
13
17
16
C
15,12
C

FIGURE AND INDEX NUMBER	PART NUMBER	DESCRIPTION	PARTS AVAIL	QTY PER ASSY
		LARGE AUXILIARY FUEL TANK INSTALLATION		
28-13-1	G010-2	Aux Fuel Tank Assembly – Large (Ref, see Figure 28-15)		
2	B526-6	Screw	X	14
3	G251-1	Panel (Ref)		
4	MS21075L08E	Nutplate	X	8
5	B204-5	Rivet (or NAS1097AD3)	X	4
6	G768-10	Harness Assembly	X	1
7	D205-36	Hose Assembly – Vent/Return (Ref; see Figure 28-29)		
8	G259-1	Panel – Bulkhead (Ref)		
9	D205-36	Hose Assembly – Pump Line (Ref; see Figure 28-29)		
10	B526-8	Screw	X	7
11	NAS1149F0332P	Washer (install using item 12; earlier ships)	X	5
12	B270-1	Sealant	X	A/R
13	G755-1*	Support Assembly (Incl item 14)	X	1
14	G682-29	Decal – "INSTALL FUEL TANK SUPPORT..."	X	1
15	NAS1149F0363P	Washer (install using item 12; earlier ships)	X	2
16	G242-5	Panel (Ref)		
17	G024-1	Floor Assembly (Ref)		
18	G762-15	Drain Weldment (install using item 12)	X	2
19	NAS9301B-4-02	Rivet	X	4
20	MS20426AD3	Rivet	X	26
21	MS21069L08K	Nutplate (if damaged, order item 23)	X	7
22	NAS1097AD3	Rivet	X	4
23	G762-13	Plate Assembly (Contact Technical Support for repair instructions.)	X	A/R
24	NAS1474A08	Nutplate	X	6
25	G766-5	Plate	X	6
26	MS20426AD3	Rivet	X	12
		* * *		
27	KI-239-2**	R66 Large Aux Fuel Tank Installation Kit Instructions	X	A/R
28	KI-239-3**	R66 Slimline Aux Fuel Tank Installation Kit Instructions	X	A/R
29	KI-239-5**	R66 Aux Fuel Tank Installation Upgrade Kit Instructions	X	A/R

NOTES
* Revision H and subsequent support assemblies compatable with G010-2 (large) & G010-4 (small) aux fuel tank; earlier supports may be modified if KI-239-5 kit is installed.

** See www.robinsonheli.com for kit contents and instructions.

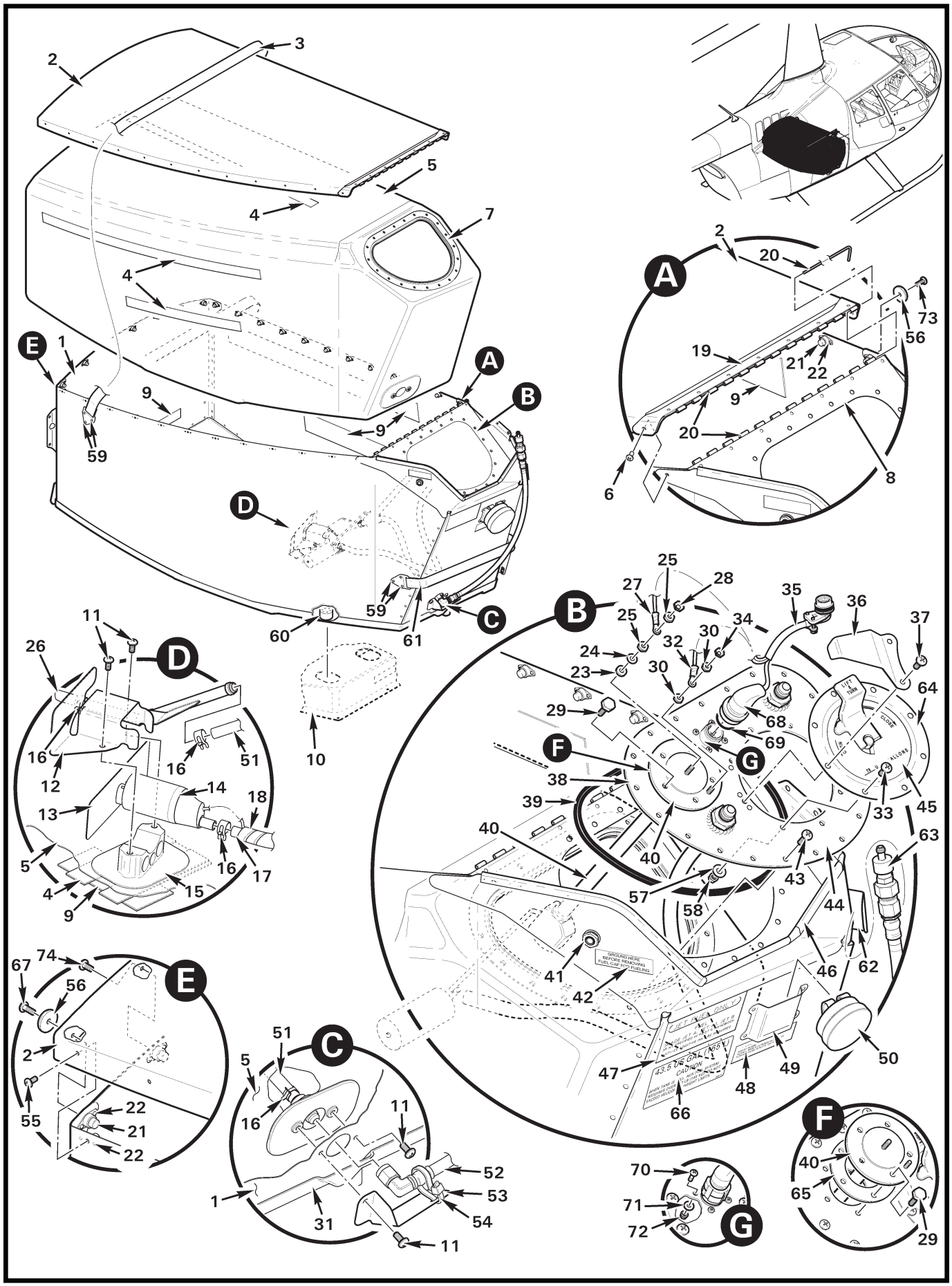
A
B
C
D
E
F
G
GROUND HERE BEFORE REMOVING FUEL CAP FOR FUELING
43.5 US GAL (165 L)
CAUTION
LIFT ARM
CLOSE
ALLOWS

FIGURE AND INDEX NUMBER	PART NUMBER	DESCRIPTION	PARTS AVAIL	QTY PER ASSY
		LARGE AUXILIARY FUEL TANK ASSEMBLY		
28-15-1	G010-2	Aux Fuel Tank Assembly – Large (Incl items 5, 8, 11 thru 18, 35 thru 42, 50 thru 54, 62, and 63)	X	1
2	G758-1	Cover	X	1
3	G762-9	Strap Assembly	X	1
4	B175-1	Hook Tape	X	A/R
5	G756-1	Bladder (Incl item 7)	X	1
6	MS27039C0807	Screw	X	3
7	G759-6	Ring	O	1
8	G754-1	Enclosure Assembly (Incl items 2, 3, 9, 19 thru 22, 49, 55, 56, 59 thru 61, and 68)	X	1
9	B175-4	Loop Tape	X	A/R
10	G755-1	Support Assembly (Ref; see Figure 28-13)		
11	MS27039C1-06	Screw	X	4
12	G764-1	Drain Weldment	X	1
13	FS22	Strainer	O	1
14	G765-1	Pump Assembly (Incl item 13)	X	1
15	G760-1	Mount Assembly	O	1
16	D277-8	Clamp	X	5
17	A729-74	Tube	X	1
18	B161-108	Spirap	X	A/R
19	G762-18	Strap	X	1
20	G762-12	Hinge	X	1
21	NAS1474A08	Nutplate	X	31
22	NAS1097AD3	Rivet	X	62
23	—	Spacer (Ref)		
24	0028-00431	Washer	O	1
25	0044-00408	Nut	O	2
26	A729-72	Tube	X	1
27	B260-3	Terminal (G768-2712W wire)	X	1
28	B330-6	Palnut	X	1
29	B289-4	Bolt	X	5
30	44-121	Nut	O	2
31	G757-1	Tray	O	1
32	B260-2	Terminal (G768-2712B wire)	X	1
33	MS27039C1-08	Screw	X	6

NOTES

Continues

FIGURE AND INDEX NUMBER	PART NUMBER	DESCRIPTION	PARTS AVAIL	QTY PER ASSY
		LARGE AUXILIARY FUEL TANK ASSEMBLY (Cont'd)		
28-15-34	B330-5	Palnut	X	1
35	G768-10	Harness Assembly (sender/pump)	X	1
36	G271-1	Guard	X	1
37	MS27039C1-07	Screw (apply A257-9 anti-seize to threads)	X	2
38	G759-1	Cover Assembly (Incl items 33, 44, 57, and 58)	X	1
39	MS29513-263	Packing	X	1
40	F550-2	Fuel Sender (Incl items 23 thru 26, 30, 31, and 65)	X	1
41	RB9526	Jack (grounding point)	X	1
42	G682-32	Decal – "GROUND HERE BEFORE REMOVING FUEL CAP..."	X	1
43	MS27039C1-09	Screw (apply A257-9 anti-seize to threads)	X	20
44	G759-2	Cover	O	1
45	F689-1	Cap	X	1
46	A226-15	Trim	X	A/R
47	F654-5	Decal – "JET FUEL ONLY..."	X	1
48	G682-28	Decal – "FUEL TANK INSTALLATION..."	X	1
49	G769-4	Mount (Ref)		
50	MT183-1	Kit (Ref; see Figure 28-19)		
51	A729-73	Tube	X	1
52	D205-35	Hose Assembly	X	1
53	G762-11	Scupper	X	1
54	MS3367-7-9	Ty-Rap	X	1
55	MS27039C0806	Screw	X	26
56	G762-5	Bumper	X	4
57	NAS1149F0332P	Washer	X	6
58	D210-3	Nut	X	6
59	MS20470AD4	Rivet	X	12
60	G761-7	Pin	X	1
61	G762-8	Strap Assembly	X	1
62	G762-7	Angle	X	1
63	A761-2	Valve (install using B270-6 sealant on threads)	X	1
64	416-3B-1	Adapter	X	1
65	0015-00423	Gasket	X	1
66	G682-37	Decal – "43.5 US GAL (165 L) CAUTION – WHEN TANK..."	X	1
67	MS24694-S5	Screw	X	4

NOTES

Continues

FIGURE AND INDEX NUMBER	PART NUMBER	DESCRIPTION	PARTS AVAIL	QTY PER ASSY
		LARGE AUXILIARY FUEL TANK ASSEMBLY (Cont'd)		
28-15-68	MS3106F12S-3S	Receptacle	O	1
	222A121-25/225	Boot	O	1
69	A215-019	O-ring (install using A257-6 grease)	X	1
70	90825A146	Screw	X	4
71	NAS620-4L	Washer	X	4
72	MS21042L04	Nut	X	4
73	MS24694-S6	Screw	X	1
74	MS24694-S3	Screw	X	5

NOTES

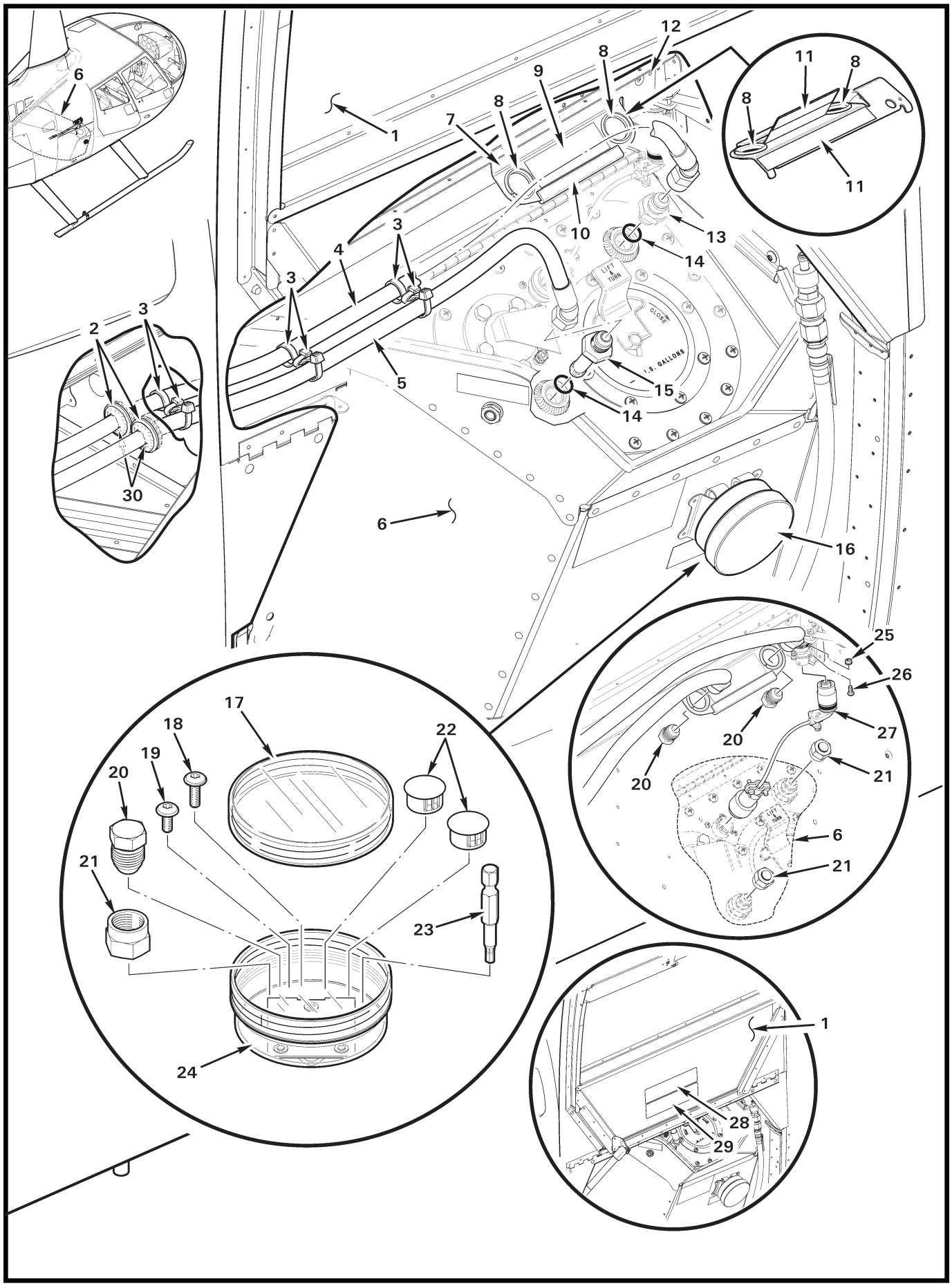
1
2
3
4
5
6
7
8
9
10
11
12
13
14
15
16
17
18
19
20
21
22
23
24
25
26
27
28
29
30
LIFT & TURN
CLOSE
U.S. GALLONS

FIGURE AND INDEX NUMBER	PART NUMBER	DESCRIPTION	PARTS AVAIL	QTY PER ASSY
		LARGE AUXILIARY FUEL TANK – COMPONENTS		
28-19-1	G900-1	Door Assembly – Baggage (Ref)		
2	MS35489-16	Grommet	X	5
3	MS3367-7-9	Ty-Rap ([2] each location, [1] used as standoff)	X	6
4	D205-36	Hose Assembly – Vent/Return (Ref; see Figure 28-29)		
5	D205-36	Hose Assembly – Pump Line (Ref; see Figure 28-29)		
6	G010-2	Aux Fuel Tank Assembly – Large (Ref)		
7	G769-1	Bracket Assembly (Incl items 8 thru 11)	X	1
8	NAS557-12A	Grommet	X	2
9	G682-31	Decal (hose stowage/plugs installation instructions)	X	1
10	A226-11	Trim (3.3 inch length)	X	A/R
11	A701-7	Tape (double sided)	X	A/R
12	NAS9301B-4-02	Rivet	X	1
13	A880-906	Fitting (or AN815-6D)	X	1
14	MS29512-06	Packing (o-ring)	X	2
15	G764-5	Fitting	X	1
16	MT183-1	Kit (loose parts for when aux tank is removed; includes items 17 thru 24)	X	1
17	—	Cap	X	1
18	B526-8	Screw	X	7
19	B526-6	Screw	X	14
20	AN806-6D	Plug	X	2
21	AN820-6	Cap (or AN929-6)	X	2
22	2663	Hole Plug (DP-625)	X	2
23	7396A23*	Torx Bit	X	1
24	MT183-2	Jar Assembly (includes clip and item 17)	X	1
25	MS21042L04	Nut	X	1
26	MS35206-214	Screw	X	2
27	G768-10	Harness Assembly (Ref, see Figure 28-13)		
28	G682-40	Decal – “CAUTION...” (load maximums)	X	1
	G682-44	Decal – “CAUTION...” (load maximums; police and E.N.G.)	X	1
29	B850-37	Hebrew Decal (below G682-40 equivalent; see also Figure 11-17)	X	A/R
30	B270-1	Sealant	X	A/R

NOTES * McMaster-Carr part number.

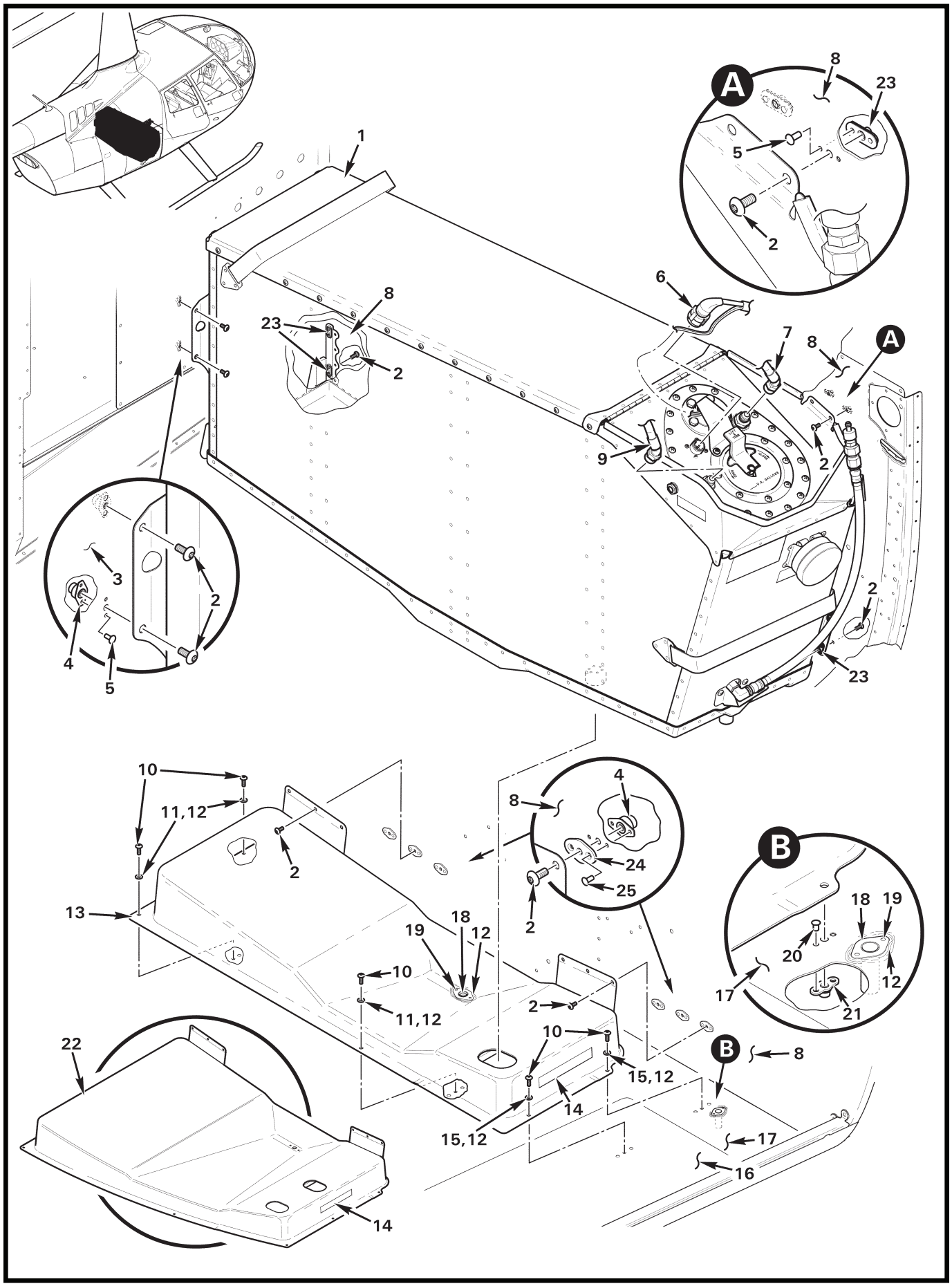
A
8
23
5
2
1
6
8
23
2
7
8
A
9
2
3
2
4
5
2
23
10
11,12
2
13
8
4
24
25
2
B
18
19
20
12
17
21
19
18
12
10
11,12
2
10
15,12
B
8
22
14
15,12
17
16
14

FIGURE AND INDEX NUMBER	PART NUMBER	DESCRIPTION	PARTS AVAIL	QTY PER ASSY
		SMALL AUXILIARY FUEL TANK INSTALLATION		
28-21-1	G010-4	Aux Fuel Tank Assembly – Small (Ref, see Figure 28-23)		
2	B526-6	Screw	X	14
3	G248-8	Panel (Ref)		
4	NAS1474A08	Nutplate	X	8
5	NAS1097AD3	Rivet (or B204-5 in item 3)	X	18
6	G768-10	Harness Assembly	X	1
7	D205-36	Hose Assembly – Vent/Return (Ref; see Figure 28-29)		
8	G259-1	Panel – Bulkhead (Ref)		
9	D205-36	Hose Assembly – Pump Line (Ref; see Figure 28-29)		
10	B526-8	Screw	X	5
11	NAS1149F0332P	Washer (install using item 12; earlier aircraft, not required)	X	3
12	B270-1	Sealant	X	A/R
13	G755-3	Support Assembly (Incl item 14)	X	1
14	G682-29	Decal – "INSTALL FUEL TANK SUPPORT..."	X	1
15	NAS1149F0363P	Washer (install using item 12; earlier aircraft, not required)	X	2
16	G242-5	Panel (Ref)		
17	G024-1	Floor Assembly (Ref)		
18	G762-15	Drain Weldment (install using item 12)	X	2
19	NAS9301B-4-02	Rivet	X	4
20	MS20426AD3	Rivet	X	16
21	MS21069L08K	Nutplate	X	5
22	G755-1*	Support Assembly (Incl item 14)	X	1
23	MS21075L08E	Nutplate	X	6
24	G766-5	Plate	X	6
25	MS20426AD3	Rivet	X	12
		***		
28	KI-239-3**	R66 Slimline Aux Fuel Tank Installation Kit Instructions	X	A/R

NOTES
* Revision H and subsequent support assemblies compatable with G010-2 (large) & G010-4 (small) aux fuel tank.
** See www.robinsonheli.com for kit contents and instructions.

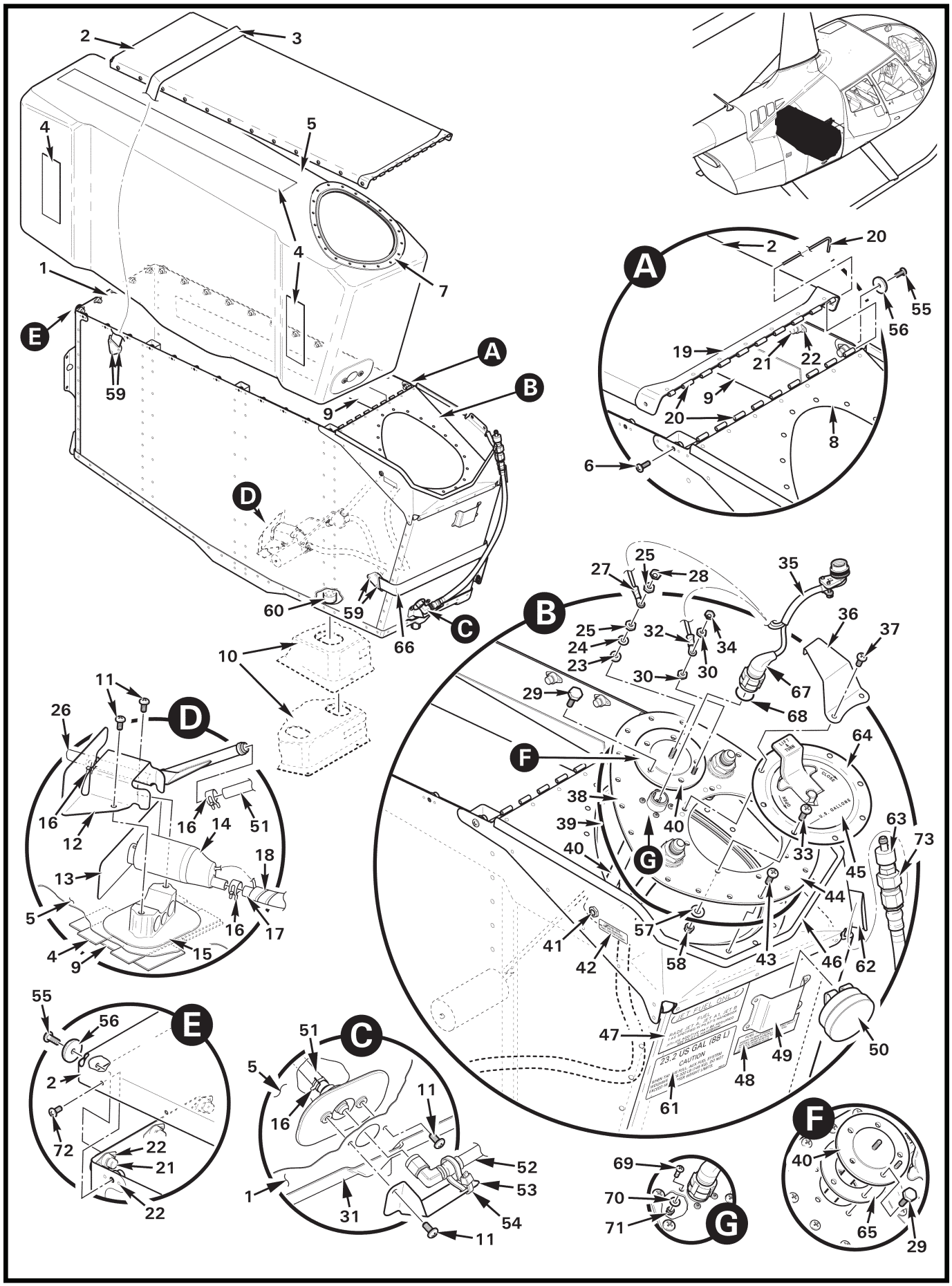
A
B
C
D
E
F
G
JET FUEL ONLY
23.2 US GAL (88 L)
CAUTION

FIGURE AND INDEX NUMBER	PART NUMBER	DESCRIPTION	PARTS AVAIL	QTY PER ASSY
		SMALL AUXILIARY FUEL TANK ASSEMBLY		
28-23-1	G010-4	Aux Fuel Tank Assembly – Small (Incl items 5, 8, 11 thru 18, 34, 36 thru 43, 45 thru 48, 50 thru 54, 61 thru 64)	X	1
2	G767-7	Cover	X	1
3	G762-19	Strap Assembly	O	1
4	B175-1	Hook Tape	X	A/R
5	G756-2	Bladder (Incl item 7 and 15)	X	1
6	MS27039C0807	Screw	X	1
7	G759-11	Ring	O	1
8	G754-2	Enclosure Assembly (Incl items 2, 3, 9, 19 thru 22, 55, 56, 59, 60 and 66)	X	1
9	B175-4	Loop Tape	X	A/R
10	G755-1	Support Assembly – Large (Ref; see Figure 28-13 and 28-21)		
	G755-3	Support Assembly – Small (Ref; see Figure 28-21)		
11	MS27039C1-06	Screw	X	4
12	G764-1	Drain Weldment	X	1
13	FS22	Strainer	O	1
14	G765-1	Pump Assembly (Incl item 13)	X	1
15	G760-1	Mount Assembly	O	1
16	D277-8	Clamp	X	5
17	A729-74	Tube	X	1
18	B161-108	Spirap	X	A/R
19	G753-4	Strap	X	1
20	G753-6	Hinge	X	1
21	NAS1474A08	Nutplate	X	29
22	NAS1097AD3	Rivet	X	58
23	—	Spacer (Ref)		
24	0028-00431	Washer	O	1
25	0044-00408	Nut	O	2
26	A729-72	Tube	X	1
27	B260-3	Terminal (G768-2712W wire)	X	1
28	B330-6	Palnut	X	1
29	B289-4	Bolt	X	5
30	44-121	Nut	O	2
31	G757-2	Tray	O	1
32	B260-2	Terminal (G768-2712B wire)	X	1

NOTES

Continues

FIGURE AND INDEX NUMBER	PART NUMBER	DESCRIPTION	PARTS AVAIL	QTY PER ASSY
		SMALL AUXILIARY FUEL TANK ASSEMBLY (cont'd)		
28-23-33	MS27039C1-08	Screw	X	6
34	B330-5	Palnut	X	1
35	G768-10	Harness Assembly (sender/pump, Incl items 27 & 32)	X	1
36	G271-1	Guard	X	1
37	MS27039C1-07	Screw (apply A257-9 anti-seize to threads)	X	2
38	G759-7	Cover Assembly (Incl items 33, 44, 57, and 58)	X	1
39	MS29513-262	Packing	X	1
40	F550-3	Fuel Sender (Incl items 23 thru 26, 30, 31, and 65)	X	1
41	RB9526	Jack (grounding point)	X	1
	A130-6	Spacer (under nut)	X	1
	—	Washer (supplied with jack, one each side of panel)	O	2
42	G682-32	Decal – "GROUND HERE BEFORE REMOVING FUEL CAP..."	X	1
43	MS27039C1-09	Screw (apply A257-9 anti-seize to threads)	X	20
44	G759-8	Cover (small)	O	1
45	F689-1	Cap	X	1
46	A226-15	Trim	X	A/R
47	F654-5	Decal – "JET FUEL ONLY..."	X	1
48	G682-28	Decal – "FUEL TANK INSTALLATION..."	X	1
49	G769-4	Mount (Ref)		
50	MT183-1	Kit (Ref; see Figure 28-19)		
51	A729-73	Tube	X	1
52	D205-37	Hose Assembly	X	1
53	G762-11	Scupper	X	1
54	MS3367-7-9	Ty-Rap	X	1
55	MS24694-S6	Screw (front bumper)	X	1
	MS24694-S5	Screw (back and rear bumpers)	X	3
56	G762-5	Bumper	X	4
57	NAS1149F0332P	Washer	X	6
58	D210-3	Nut	X	6
59	MS20470AD4	Rivet	X	12
60	G761-7	Pin	X	1
61	G682-41	Decal – "23.2 US GAL (88)L CAUTION – WHEN TANK IS..."	X	1
62	G762-7	Angle	X	1
63	A761-2	Valve (install using B270-6 sealant on threads)	X	1

NOTES

FIGURE AND INDEX NUMBER	PART NUMBER	DESCRIPTION	PARTS AVAIL	QTY PER ASSY
		SMALL AUXILIARY FUEL TANK ASSEMBLY (Cont'd)		
28-23-64	416-3B-1	Adapter	X	1
65	0015-00423	Gasket	X	1
66	G762-8	Strap Assembly	O	1
67	MS3106F12S-3S	Receptacle	O	1
	222A121-25/225	Boot	O	1
68	A215-019	O-ring	X	1
69	90825A146	Screw	X	4
70	NAS620-4L	Washer	X	4
71	MS21042L04	Nut	X	4
72	MS27039C0806	Screw	X	24
73	G764-6	Adapter	X	1

NOTES

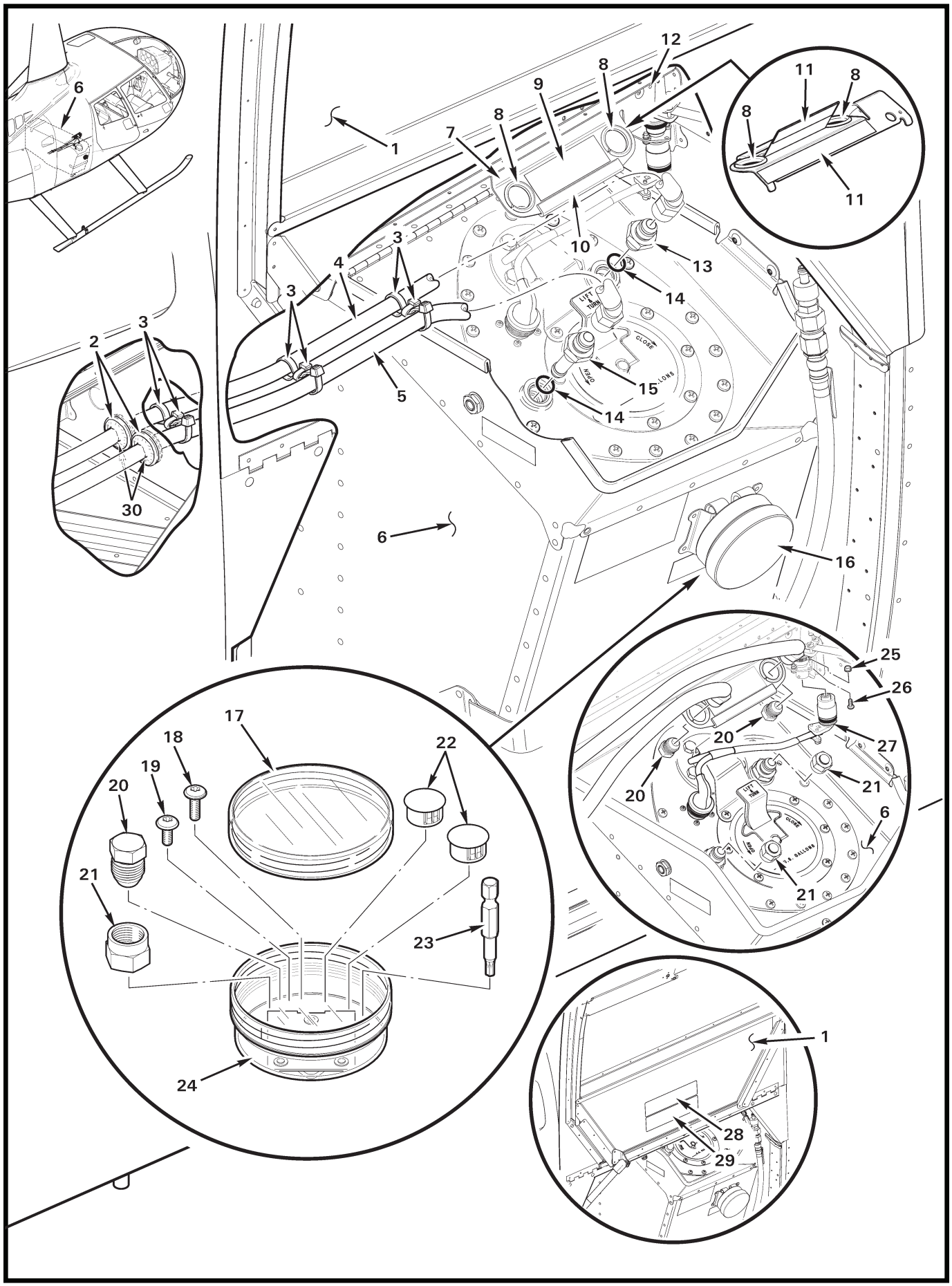
1
2
3
4
5
6
7
8
9
10
11
12
13
14
15
16
17
18
19
20
21
22
23
24
25
26
27
28
29
30
LIFT TANK
CLOSE
AZAD
OPEN
0-14 GALLONS

FIGURE AND INDEX NUMBER	PART NUMBER	DESCRIPTION	PARTS AVAIL	QTY PER ASSY
		SMALL AUXILIARY FUEL TANK – COMPONENTS		
28-27-1	G900-1	Door Assembly – Baggage (Ref)		
2	MS35489-16	Grommet	X	5
3	MS3367-7-9	Ty-Rap ([2] each location, [1] used as standoff)	X	6
4	D205-36	Hose Assembly – Vent/Return (Ref; see Figure 28-29)		
5	D205-36	Hose Assembly – Pump Line (Ref; see Figure 28-29)		
6	G010-4	Tank Assembly – Small Aux (Ref)		
7	G769-1	Bracket Assembly (Incl items 8 thru 11)	X	1
8	NAS557-12A	Grommet	X	2
9	G682-31	Decal (hose stowage/plugs installation instructions)	X	1
10	A226-11	Trim (3.3 inch length)	X	A/R
11	A701-7	Tape (double sided)	X	A/R
12	NAS9301B-4-02	Rivet	X	1
13	A880-906	Fitting (or AN815-6D)	X	1
14	MS29512-06	Packing (o-ring)	X	2
15	G764-5	Fitting	X	1
16	MT183-1	Kit (loose parts for when aux tank removed; includes items 17 thru 24)	X	1
17	—	Cap	X	1
18	B526-8	Screw	X	7
19	B526-6	Screw	X	14
20	AN806-6D	Plug	X	2
21	AN820-6	Cap (or AN929-6)	X	2
22	2663	Hole Plug (DP-625)	X	2
23	7396A23*	Torx Bit	X	1
24	MT183-2	Jar Assembly (includes clip and item 17)	X	1
25	MS21042L04	Nut	X	2
26	MS35206-214	Screw	X	2
27	G768-10	Harness Assembly (Ref, see Figure 28-13)		
28	G682-40	Decal – “CAUTION...” (load maximums)	X	1
29	B850-37	Hebrew Decal (below G682-40 equivalent; see also Figure 11-17)	X	A/R
30	B270-1	Sealant	X	A/R

NOTES * McMaster-Carr part number.

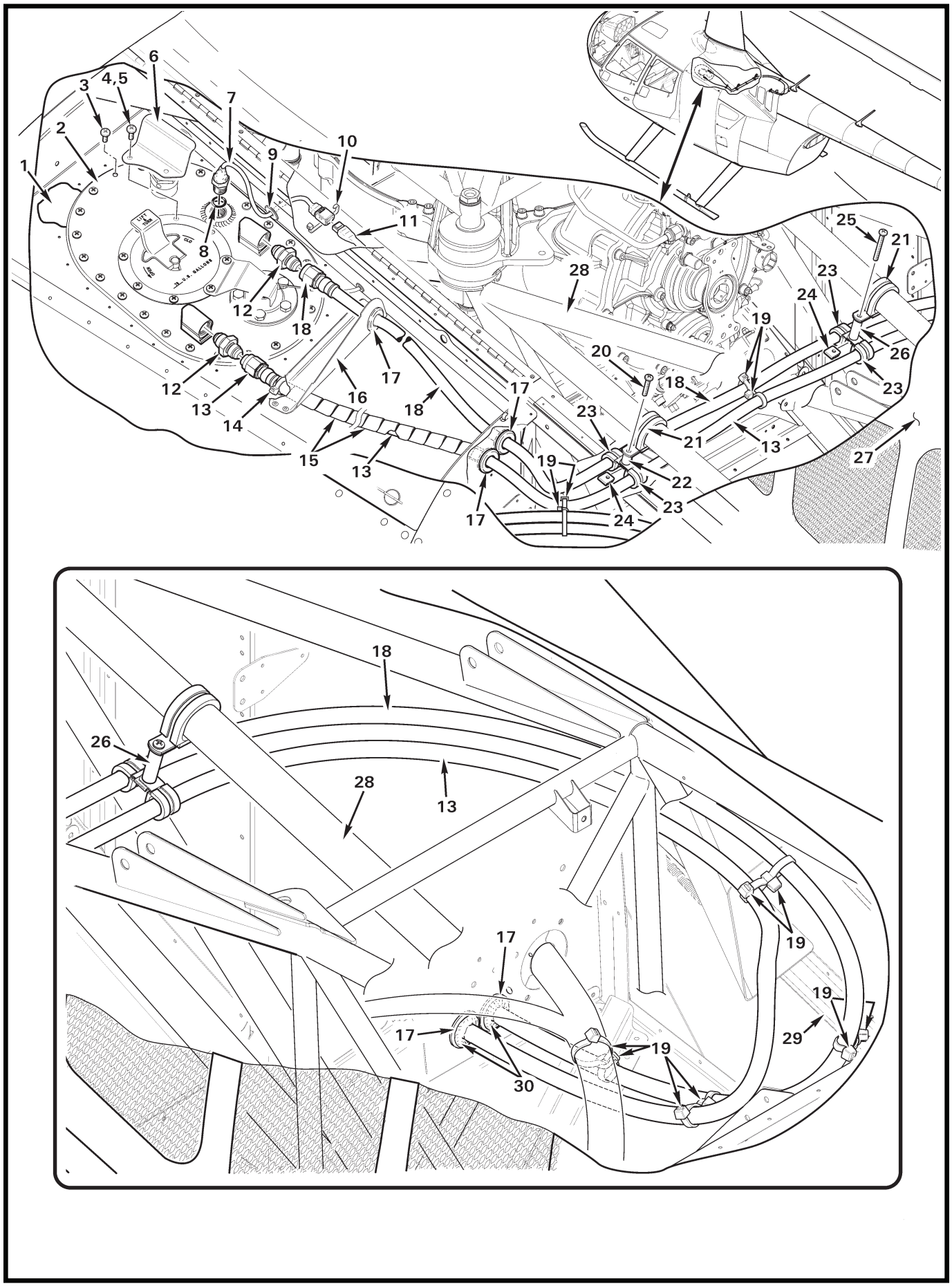
1
2
3
4,5
6
7
8
9
10
11
12
13
14
15
16
17
18
19
20
21
22
23
24
25
26
27
28
29
30

FIGURE AND INDEX NUMBER	PART NUMBER	DESCRIPTION	PARTS AVAIL	QTY PER ASSY
		AUXILIARY FUEL TANK – HOSE INSTALLATION		
28-29-1	G028-1	Bladder Assembly (Ref; main)		
2	F250-10	Cover Assembly	X	1
3	MS27039C1-06	Screw (install using item 5)	X	24
4	MS27039C1-07	Screw (install using item 5)	X	2
5	A257-9	Anti-Seize	X	A/R
6	G764-7	Shield	X	1
7	G768-11	Sensor Assembly (install using item 8; finger tighten only)	X	1
8	MS29512-05	Packing	X	1
9	MS35489-2	Grommet	X	1
10	MS3367-4-9	Ty-Rap	X	A/R
11	D269-2	Receptacle (Ref)		
	F859-2703	Wire (Ref)		
	F859-2706	Wire (Ref)		
	F859-2707	Wire (Ref)		
12	A880-906	Fitting (or AN815-6D)	X	2
13	D205-36	Hose Assembly – Vent/Return	X	1
14	MS3367-7-9	Ty-Rap	X	A/R
15	B161-108	Spirap	X	A/R
16	G913-4	Strut (Ref)		
17	MS35489-16	Grommet	X	5
18	D205-36	Hose Assembly – Pump Line	X	1
19	MS3367-7-9	Ty-Rap ([2] each location, [1] used as standoff)	X	8
20	MS27039C0818	Screw	X	1
21	MS21919WDG18	Clamp	X	2
22	A130-38	Spacer	X	1
23	MS21919WDG9	Clamp	X	4
24	B162-2	Clipnut	X	2
25	MS27039C0828	Screw	X	1
26	C130-61	Spacer	X	1
27	F706-1	Cowling (Ref)		
28	F020-1	Upper Frame Assembly (Ref)		
29	G912-4	Stiffener (Ref)		
30	B270-1	Sealant (Ref; see Figures 28-19, and 28-27)		

NOTES

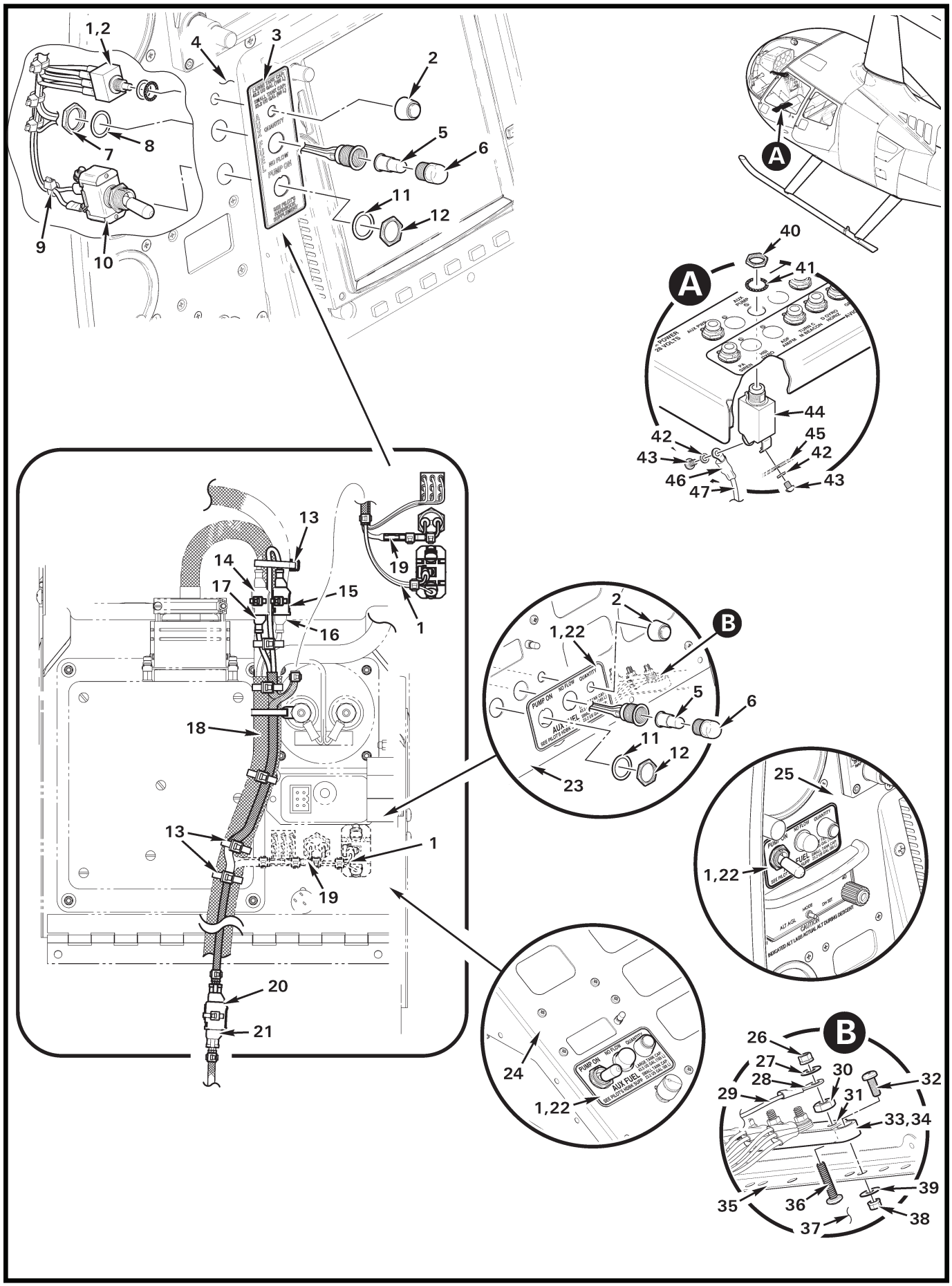
1,2
3
4
2
5
6
7
8
9
10
11
12
A
40
41
44
42
45
43
46
47
13
14
15
16
17
18
19
1
20
21
B
22
23
24
25
26
27
28
29
30
31
32
33,34
35
36
37
38
39

FIGURE AND INDEX NUMBER	PART NUMBER	DESCRIPTION	PARTS AVAIL	QTY PER ASSY
		AUXILIARY FUEL TANK – ELECTRICAL COMPONENTS		
28-31-1	G768-1	Control Panel Harness Assembly (Incl items 2, 3, 5 thru 13, 15, 17, 19, and 20)	X	1
2	B227-9	Switch Assembly (includes washer, lockwasher, and cap as shown)	X	1
3	G768-13	Panel (vertical orientation; large and small tank)	X	1
4	G065	Face Assembly (Ref; G060 console)		
5	B196-21	Lamp	X	1
6	B198-1	Light – Warning (amber; includes items 7 and 8)	X	1
7	—	Nut	O	1
8	—	Washer	O	1
9	MS3367-4-9	Ty-Rap	X	7
10	B300-4	Switch Assembly (Incl items 11 and 12)	X	1
	AT406B	Cap	X	1
11	—	Washer	O	1
12	—	Nut	O	1
13	MS3367-5-0	Ty-Rap	X	A/R
14	D269-1	Plug (G716 or G717 wire harness)	X	1
	-2033	Wire (Ref)		
	-2034	Wire (Ref)		
15	D269-1	Plug	X	1
	G768-2713	Wire (Ref)		
16	D269-2	Receptacle (G716 or G717 wire harness)	X	1
	-2033	Wire (Ref)		
	-2034	Wire (Ref)		
17	D269-2	Receptacle	X	1
	-2714	Wire (Ref)		
18	G716/G717	Harness Assembly (Ref)		
19	D275-101	Diode (1N4005G)	X	1
	B267-5	Solder Splice	X	1
	B158-2	Heat Shrink	X	A/R
20	D269-5	Plug	X	1
	D269-22	Backshell	X	1
	B158-2	Heat Shrink	X	A/R
21	D269-6	Receptacle	X	1
	F859	Wire Harness (Ref)		
22	G768-12	Panel (horizontal orientation; large and small tank)	X	1

NOTES

Continues

FIGURE AND INDEX NUMBER	PART NUMBER	DESCRIPTION	PARTS AVAIL	QTY PER ASSY
		AUXILIARY FUEL TANK – ELECTRICAL COMPONENTS (Cont'd)		
28-31-23	G054-4	Face Assembly (Ref; G050 console, "high")		
24	G054-8	Face Assembly (Ref; G050 console, "low")		
25	G065-35	Face Assembly (Ref; G060 console with radar altimeter installed)		
26	MS21042L08	Nut	X	1
27	NAS1149FN816P	Washer	X	1
28	B260-3	Terminal (Ref)		
29	F859-2786	Wire (Ref; test switch ground)		
30	B301-8	Nut	X	1
31	A448-10	Bus Bar	X	1
32	MS35206-228	Screw	X	2
33	C448-2	Block Assembly (Incl items 30, 31, and 36)	X	1
34	C448-5	Block	X	1
35	F365-1	Angle (Ref)		
36	B567-43	Screw	X	4
37	F359-2	Panel (Ref; RH)		
38	MS21042L06	Nut	X	1
39	NAS1149FN616P	Washer	X	2
40	—	Nut	O	1
41	—	Washer	O	1
42	—	Washer	O	2
43	—	Screw	O	2
44	B297-5	Circuit Breaker (5 amp)	X	1
45	A448	Bus Bar	X	1
46	B260-2	Terminal	X	1
47	-2699	Wire (Ref; earlier aircraft with G655-3 time delay installed)		
	-2700	Wire (Ref; aux fuel tank)		

NOTES

Intentionally Blank

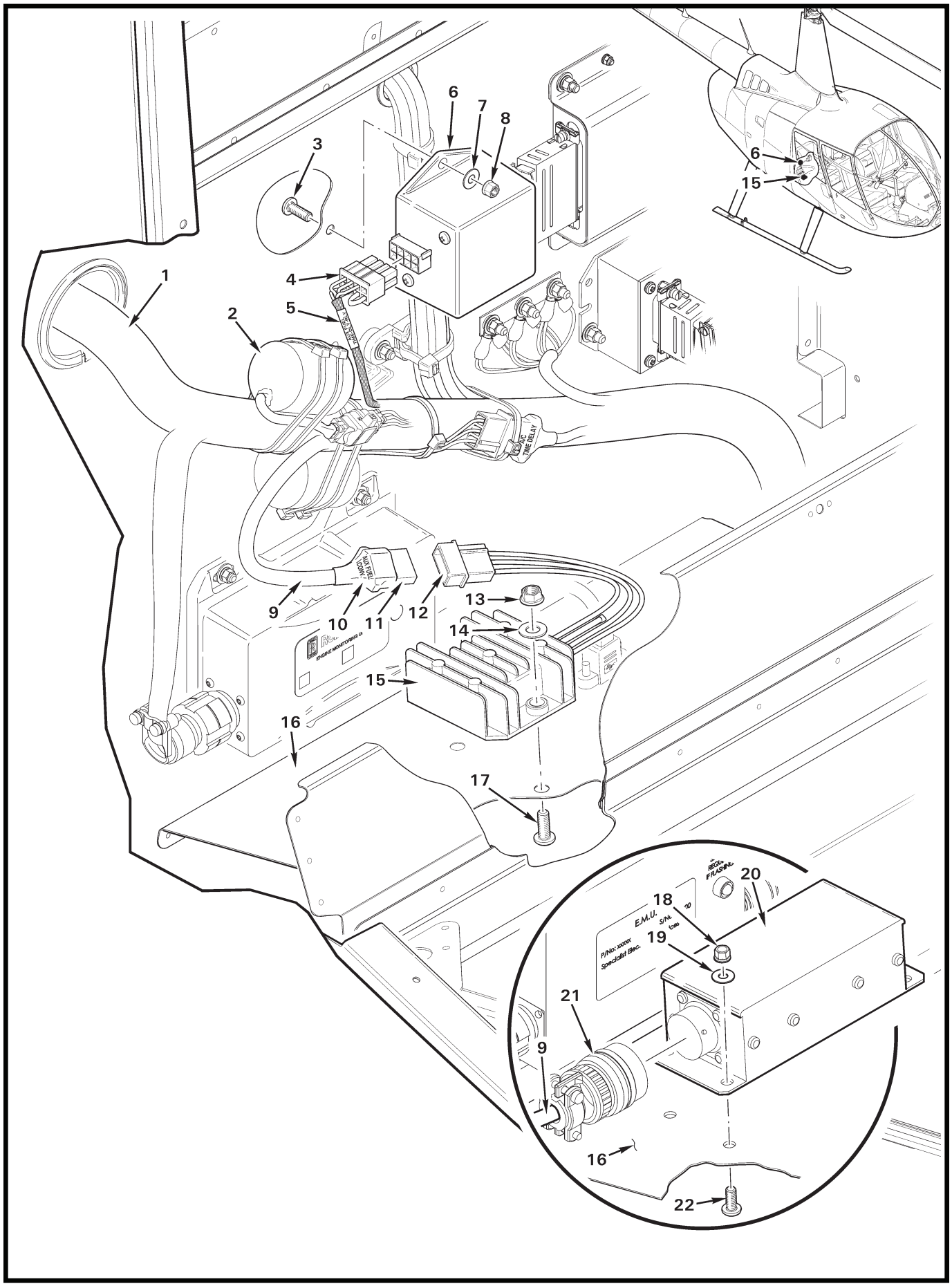
1
2
3
4
5
6
7
8
9
10
11
12
13
14
15
16
17
18
19
20
21
22
AUX FUEL CONV.
A/C TIME-DELAY
ENGINE MONITORING
E.M.U.
P/No: 9000X
Specialist Elec.
S/N:
RESET FLASHING

FIGURE AND INDEX NUMBER	PART NUMBER	DESCRIPTION	PARTS AVAIL	QTY PER ASSY
		AUXILIARY FUEL TANK – ELECTRICAL COMPONENTS		
28-35-1	F859	Wire Harness Assembly (Ref; includes items 4 and 5)		
2	G656-1	Module Assembly (Ref)		
3	MS27039C0807	Screw	X	2
4	39-01-2085	Housing	X	1
	39-00-0039	Socket	X	7
	RNC55H1403FS	Resistor (not shown)	X	1
	B158-2	Heat Shrink (cover resistor)	X	A/R
5	B158-6	Heat Shrink (labeled “AUX FUEL TIME DLY RLY”)	X	A/R
6	XESR10-S01-FP-0787	Time Delay Relay	X	1
7	NAS1149FN816P	Washer	X	2
8	MS21042L08	Nut	X	2
9	F859-2697	Wire (Ref)		
	F859-2698	Wire (Ref)		
	F859-2702	Wire (Ref)		
	F859-2715	Wire (Ref)		
10	B158-10	Heat Shrink (labeled “AUX FUEL CONV”)	X	1
11	B263-35	Housing	X	1
	B263-2	Socket	X	3
12	B263-34	Housing	X	1
	B263-3	Pin	X	3
13	D210-3	Nut	X	2
14	NAS1149F0332P	Washer	X	2
15	G768-7	Converter – Power (28-to-14-volt, includes item 12)	X	1
16	F679-2	Cover (Ref, RH)		
17	MS27039C1-08	Screw	X	4
18	MS21042L08*	Nut	X	4
19	NAS1149FN816P*	Washer	X	4
20	LT-46D*	Converter – Power (28-to-14-volt)	X	1
21	MS3116F14-5S*	Plug	X	1
22	MS27039C0805*	Screw	X	4

NOTES * Earlier R66’s.

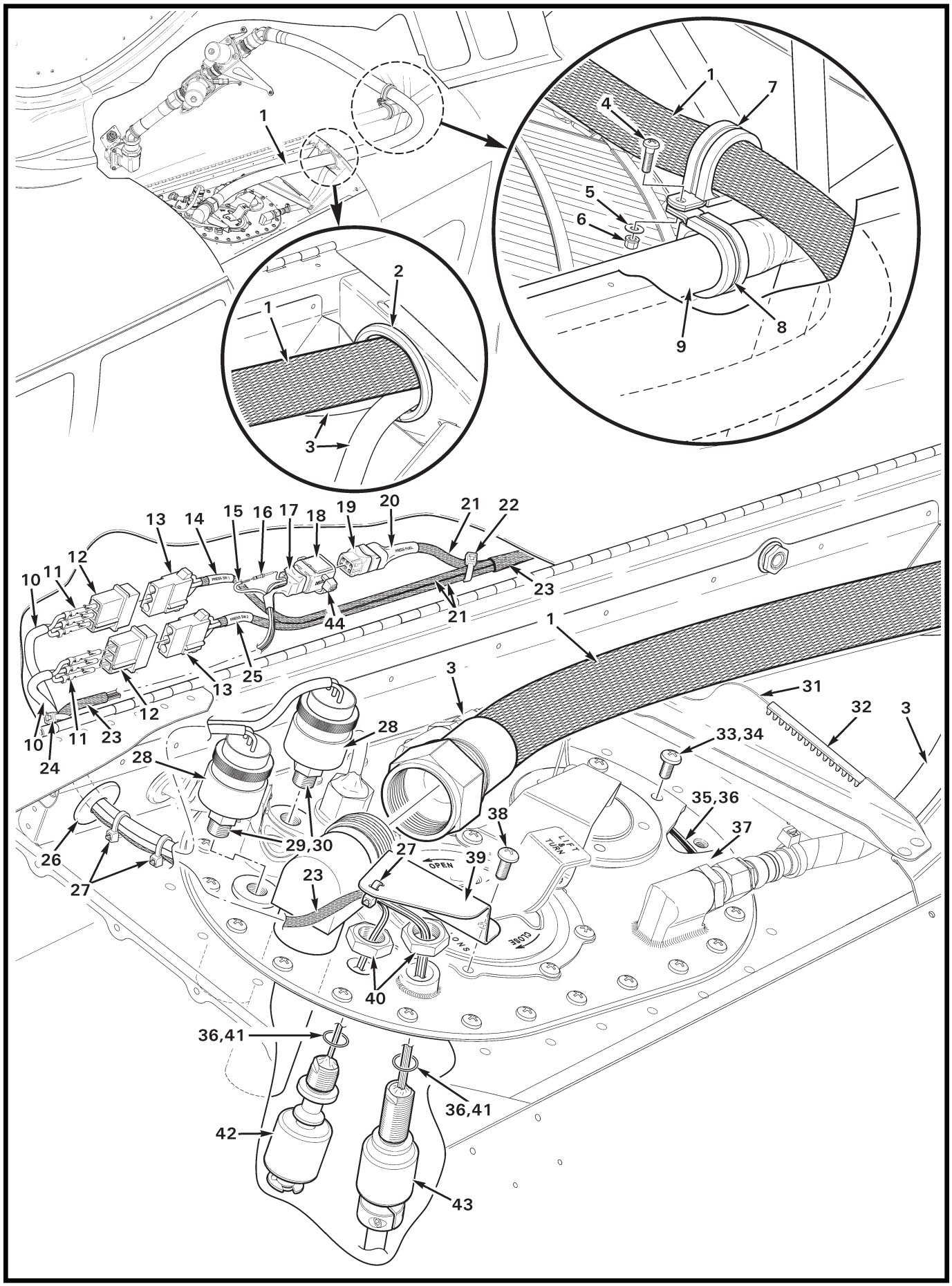
1
2
3
4
5
6
7
8
9
10
11
12
13
14
15
16
17
18
19
20
21
22
23
24
25
26
27
28
29,30
31
32
33,34
35,36
37
38
39
40
36,41
42
43
44
OPEN
CLOSE
LIFT & TURN

FIGURE AND INDEX NUMBER	PART NUMBER	DESCRIPTION	PARTS AVAIL	QTY PER ASSY
		PRESSURE FUELING SYSTEM – MAIN FUEL PORT		
28-37-1	D205-44	Hose Assembly	X	1
2	NAS557-28A	Grommet (for ships with optional aux fuel tank)	X	1
	MS35489-27	Grommet (for ships without optional aux fuel tank; not shown)	X	1
3	D205-36	Hose Assembly (ref; optional fuel tank installation shown)		
4	MS27039C0809	Screw	X	1
5	NAS1149FN816P	Washer	X	1
6	MS21042L08	Nut	X	1
7	MS21919WDG19	Clamp	X	1
8	MS21919WDG18	Clamp	X	1
9	F020-1	Frame Assembly – Upper (ref)		
10	B158-704	Heat Shrink	X	A/R
11	B263-1	Pin	X	3
12	B263-14	Housing	X	2
13	B263-15	Housing	X	2
	B263-2	Socket	X	4
14	B158-4	Heat Shrink (labeled “PRESS SW 1”)	X	A/R
15	—	Wire (typical, ref)		
16	M39029/58-360	Pin	X	6
17	B158-6	Heat Shrink	X	A/R
18	D269-5	Plug (includes [6] M39029/58-360 pins)	X	1
19	D269-6	Receptacle (includes [6] M39029/57-354 sockets)	X	1
	B267-5	Splice (not shown)	X	2
20	B158-6	Heat Shrink (labeled “PRESS FUEL”)	X	A/R
21	B266-4	Sleeving	X	A/R
22	MS3367-5-9	Ty-rap	X	A/R
23	B266-8	Sleeving	X	A/R
24	MS3367-4-9	Ty-rap	X	A/R
25	B158-4	Heat Shrink (labeled “PRESS SW 2”)	X	A/R
26	MS35489-7	Grommet	X	1
27	MS3367-4-0	Ty-rap	X	A/R
28	D745-7	Switch Assembly – Pressure (Includes switch, wires, and items 10 and 11, assembled [does not include item 12]. Install using item 29 or 30 on threads.)	X	2
29	B270-6	Sealant	X	A/R
30	A701-11	Tape (Teflon)	X	A/R

NOTES

Continues

FIGURE AND INDEX NUMBER	PART NUMBER	DESCRIPTION	PARTS AVAIL	QTY PER ASSY
		PRESSURE FUELING SYSTEM – MAIN FUEL PORT (Cont'd)		
28-37-31	G913-4	Strut (ref)		
32	A225-1	Grommet	X	A/R
33	MS27039C1-06	Screw (install using item 34)	X	26
34	A257-9	Anti-seize	X	A/R
35	MS29513-270	Packing (install using item 36)	X	1
36	A257-6	Grease	X	A/R
37	F250-15	Cover Assembly (for ships with optional aux fuel tank)	X	1
	F250-12	Cover Assembly (for ships without optional aux fuel tank; not shown)	X	1
38	MS27039C1-07	Screw	X	2
39	G989-7	Shield	X	1
40	A880-1005	Nut	X	2
41	MS29512-05	Packing (install using item 36)	X	2
42	A521-6	Switch Assembly (Includes switch and wires, assembled; does not include item 16.)	X	1
43	A521-7	Switch Assembly (Revision P or later; includes switch and wires, assembled; does not include item 16.)	X	1
44	MS3367-4-9	Ty-rap (locks connector)	X	1

NOTES

Intentionally Blank

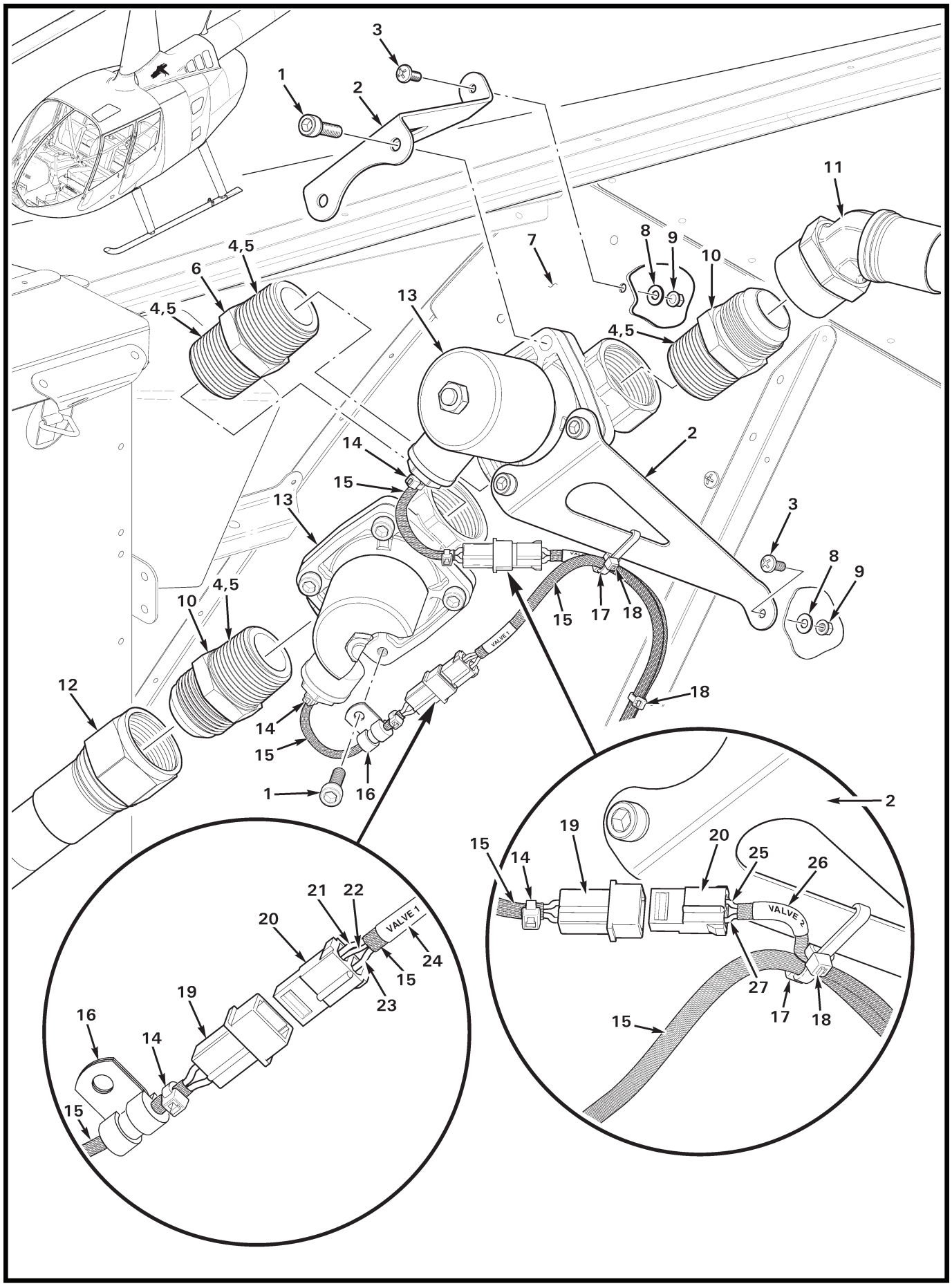

FIGURE 28-41 PRESSURE FUELING SYSTEM – SHUT-OFF VALVE ASSEMBLIES

FIGURE AND INDEX NUMBER	PART NUMBER	DESCRIPTION	PARTS AVAIL	QTY PER ASSY
		PRESSURE FUELING SYSTEM – SHUT-OFF VALVE ASSEMBLIES		
28-41-1	—	Screw	O	8
2	G989-8	Bracket	X	2
3	MS27039C0806	Screw	X	2
4	B270-6	Sealant	X	A/R
5	A701-11	Tape (Teflon)	X	A/R
6	10375	Adapter (install using item 4 or 5 on threads)	X	1
7	F234-1	Firewall (Ref)		
8	NAS1149FN816P	Washer	X	2
9	MS21042L08	Nut	X	2
10	10228	Fitting (install using item 4 or 5 on threads)	X	2
11	D205-44	Hose Assembly (Ref)		
12	D205-45	Hose Assembly (Ref)		
13	G992-1	Valve Assembly (Incl items 14, 15, and 19)	X	2
14	MS3367-4-0	Ty-rap	X	4
15	B266-4	Sleeving	X	A/R
16	MS21919WDG2	Clamp	X	1
17	MS3367-5-9	Ty-rap	X	1
18	MS3367-4-9	Ty-rap	X	A/R
19	B263-12	Housing	X	2
	B263-1	Pin	X	2
20	B263-13	Housing	X	2
	B263-2	Socket	X	2
21	G991-3164	Wire (Ref)		
22	G991-3184	Wire (Ref)		
23	G991-3163	Wire (Ref)		
24	B158-4	Heat Shrink (labeled “VALVE 1”)	X	A/R
25	G991-3184	Wire (Ref)		
26	B158-404	Heat Shrink (labeled “VALVE 2”)	X	A/R
27	G991-3183	Wire (Ref)		

NOTES

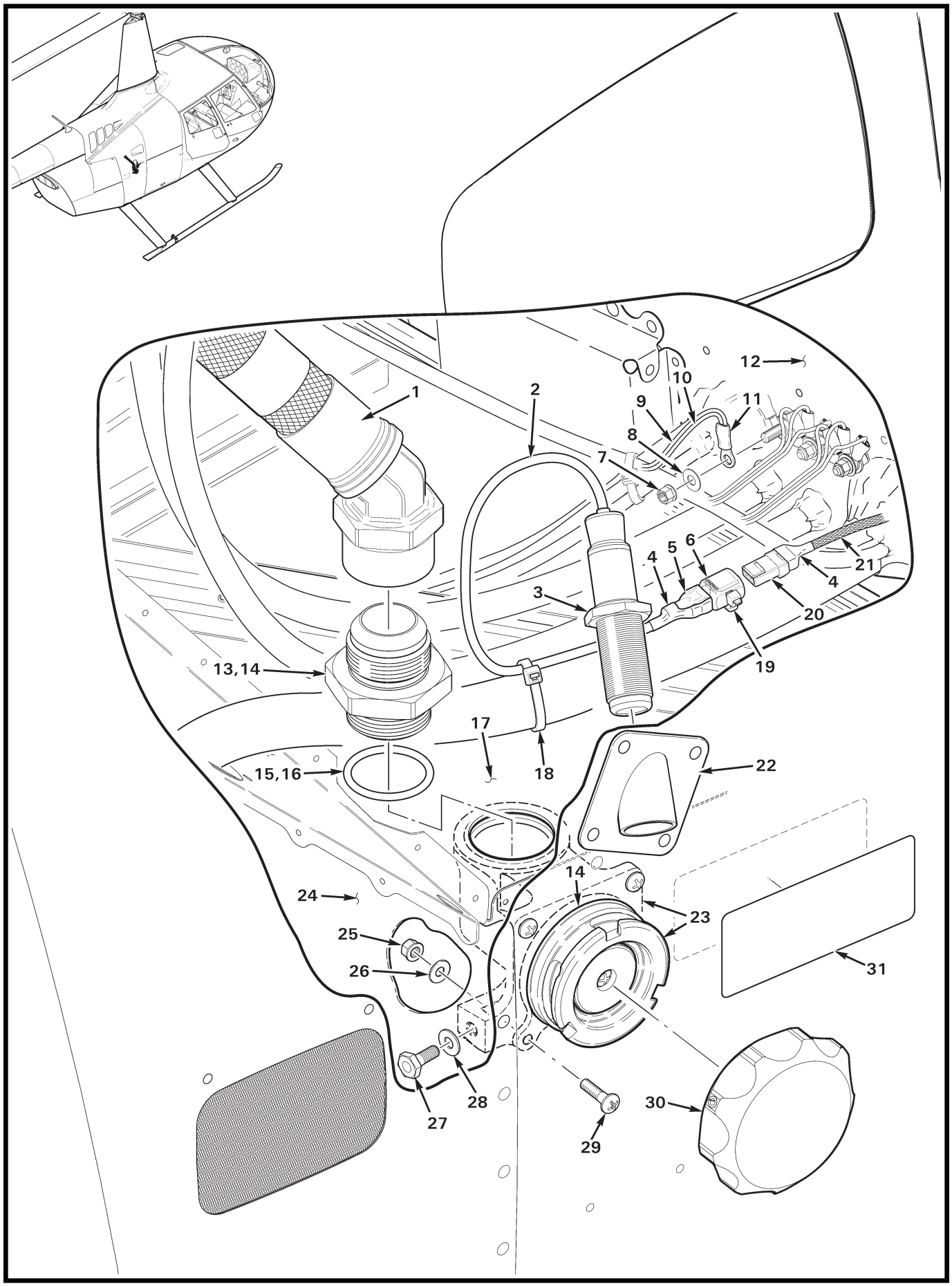
1
2
3
4
5
6
7
8
9
10
11
12
13,14
15,16
17
18
19
20
21
22
23
24
25
26
27
28
29
30
31

FIGURE AND INDEX NUMBER	PART NUMBER	DESCRIPTION	PARTS AVAIL	QTY PER ASSY
		PRESSURE FUELING SYSTEM – PRESSURE FUEL PORT		
28-43-1	D205-45	Hose Assembly	X	1
2	G990-4	Sensor Assembly (Incl items 3 thru 6)	X	1
3	—	Hex Nut	O	1
4	B158-6	Heat Shrink	X	A/R
5	D269-21	Backshell	X	1
6	D269-1	Plug (includes [3] M39029/58-360 pins)	X	1
	B158-01	Heat Shrink (around white wire, not shown)	X	A/R
7	MS21042L08	Nut (ref)		
8	NAS1149FN816P	Washer (ref)		
9	G991-3164	Wire (Ground, from G992-1 valve assembly; ref)		
10	G991-3172	Wire (Ground, from item 2; ref)		
11	B260-3	Terminal	X	1
12	G236-1	Bulkhead – Fuel Tank (ref)		
13	G989-6	Fitting (apply item 14 between fitting and item 17)	X	1
14	B270-1	Sealant	X	A/R
15	MS29512-16	Packing (install using item 16)	X	1
16	A257-6	Grease	X	A/R
17	G239-1	Panel (ref)		
18	MS3367-5-9	Ty-Rap	X	A/R
19	MS3367-4-9	Ty-Rap (locks connector)	X	1
20	D269-2	Receptacle (includes [3] M39029/57-354 sockets)	X	1
21	B266-4	Sleeving	X	A/R
22	G989-9	Housing Weldment (ref)		
23	G987-1	Valve Assembly	X	1
24	F233-1	Firewall (ref)		
25	MS21042L08	Nut	X	4
26	NAS1149FN816P	Washer	X	4
27	NAS6603-2	Bolt	X	1
28	NAS1149F0332P	Washer	X	1
29	MS27039C0810	Screw	X	4
30	G988-1	Cap Assembly	X	1
31	G682-45	Decal – "FUEL GRADE" (for use with lighter ships)	X	1
	G682-47	Decal – "FUEL GRADE" (for use with darker ships)	X	1

NOTES

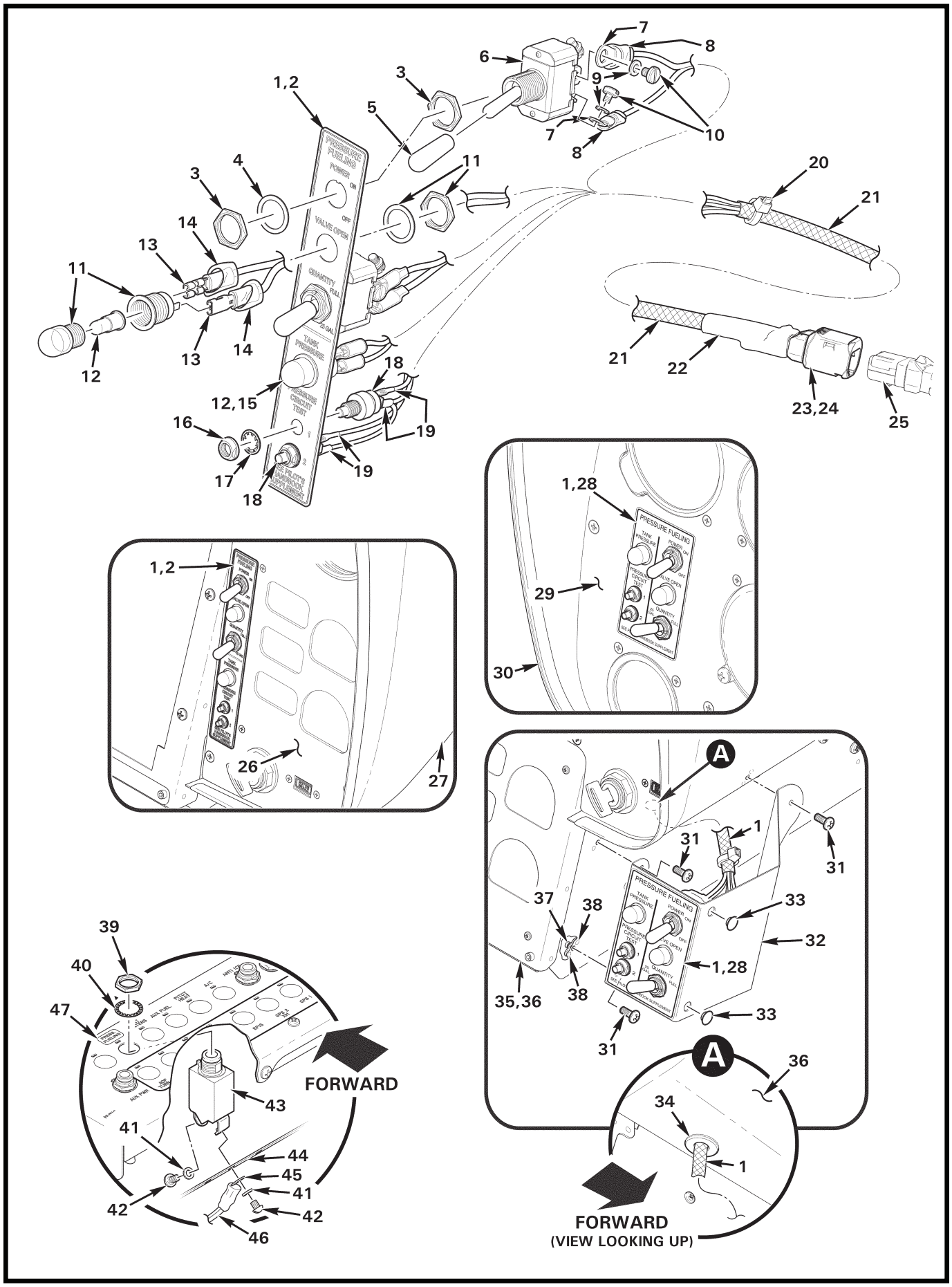
PRESSURE FUELING
POWER
ON
OFF
VALVE OPEN
QUANTITY
FULL
25 GAL
TANK PRESSURE
PRESSURE CIRCUIT TEST
PILOT'S LOCKBOOK SAFE LIGHT
1,2
3
4
5
6
7
8
9
10
11
12
13
14
12,15
16
17
18
19
20
21
22
23,24
25
1,28
29
30
26
27
A
31
32
33
34
35,36
36
37
38
39
40
41
42
43
44
45
46
47
FORWARD
FORWARD
(VIEW LOOKING UP)

FIGURE AND INDEX NUMBER	PART NUMBER	DESCRIPTION	PARTS AVAIL	QTY PER ASSY
		PRESSURE FUELING SYSTEM – ELECTRICAL COMPONENTS		
28-45-1	G990-1	Switch Assembly – Fuel (includes items 5 thru 8, 11 thru 15, 18 thru 24, and wires, assembled.)	X	1
2	G990-3	Panel – Fuel (G060; Revision E or later)	X	1
3	—	Nut	O	4
4	—	Washer	O	2
5	AT406B	Cap	X	2
6	B300-4	Switch (incl items 3 [2], 4 [1], 9 [3], and 10 [3])	X	2
7	B260-2	Terminal	X	4
8	B158-6	Heat Shrink (4 places)	X	A/R
9	—	Lockwasher	O	6
10	—	Screw	O	6
11	B198-1	Light – Caution (amber; does not include item 12)	X	1
12	B196-21	Lamp (28-volt)	X	2
13	B262-1	Receptacle	X	4
14	B158-3	Heat Shrink (4 places)	X	A/R
15	B198-2	Light – Warning (red; does not include item 12)	X	1
16	B227-4	Dress Nut	X	2
17	B227-3	Lockwasher	X	2
18	B227-6	Switch Assembly (includes items 16 and 17; supplied plain washer not used)	X	2
19	B158-2	Heat Shrink (4 places)	X	A/R
20	MS3367-4-0	Ty-rap	X	1
21	B266-4	Sleeving (or B266-8 sleeving)	X	A/R
22	B158-8	Heat Shrink (labeled “PRESS FUEL”)	X	A/R
23	D269-23	Backshell	X	1
24	D269-11	Plug (includes [9] M39029/57-354 sockets)	X	1
25	D269-12	Receptacle (ref)		
26	G065	Face (ref)		
27	G060	Console (ref)		
28	G990-8	Panel – Fuel (G050/G070; Revision E or later)	X	1
29	G055	Face (ref)		
30	G050	Console (ref)		
31	MS27039C0806	Screw	X	3
32	G990-5	Bracket	X	1
33	2603	Hole Plug	X	2
34	MS35489-149	Grommet	X	1
35	G074	Face (ref)		
36	G070	Console (ref)		

NOTES

Continues

FIGURE AND INDEX NUMBER	PART NUMBER	DESCRIPTION	PARTS AVAIL	QTY PER ASSY
		PRESSURE FUELING SYSTEM – ELECTRICAL COMPONENTS (Cont'd)		
28-45-37	MS21069L08K	Nutplate	X	3
38	MS20426AD3	Rivet	X	6
39	—	Nut	O	1
40	—	Lockwasher	O	1
41	—	Washer	O	2
42	—	Screw	O	2
43	B297-5	Circuit Breaker (5 amp, includes items 39 thru 42)	X	1
44	A448	Bus Bar (ref)		
45	B260-2	Terminal	X	1
46	G991-3156	Wire (ref)		
	G991-3180	Wire (ref)		
47	G682-46	Decal "PRESS FUELING"	X	1

NOTES

Intentionally Blank

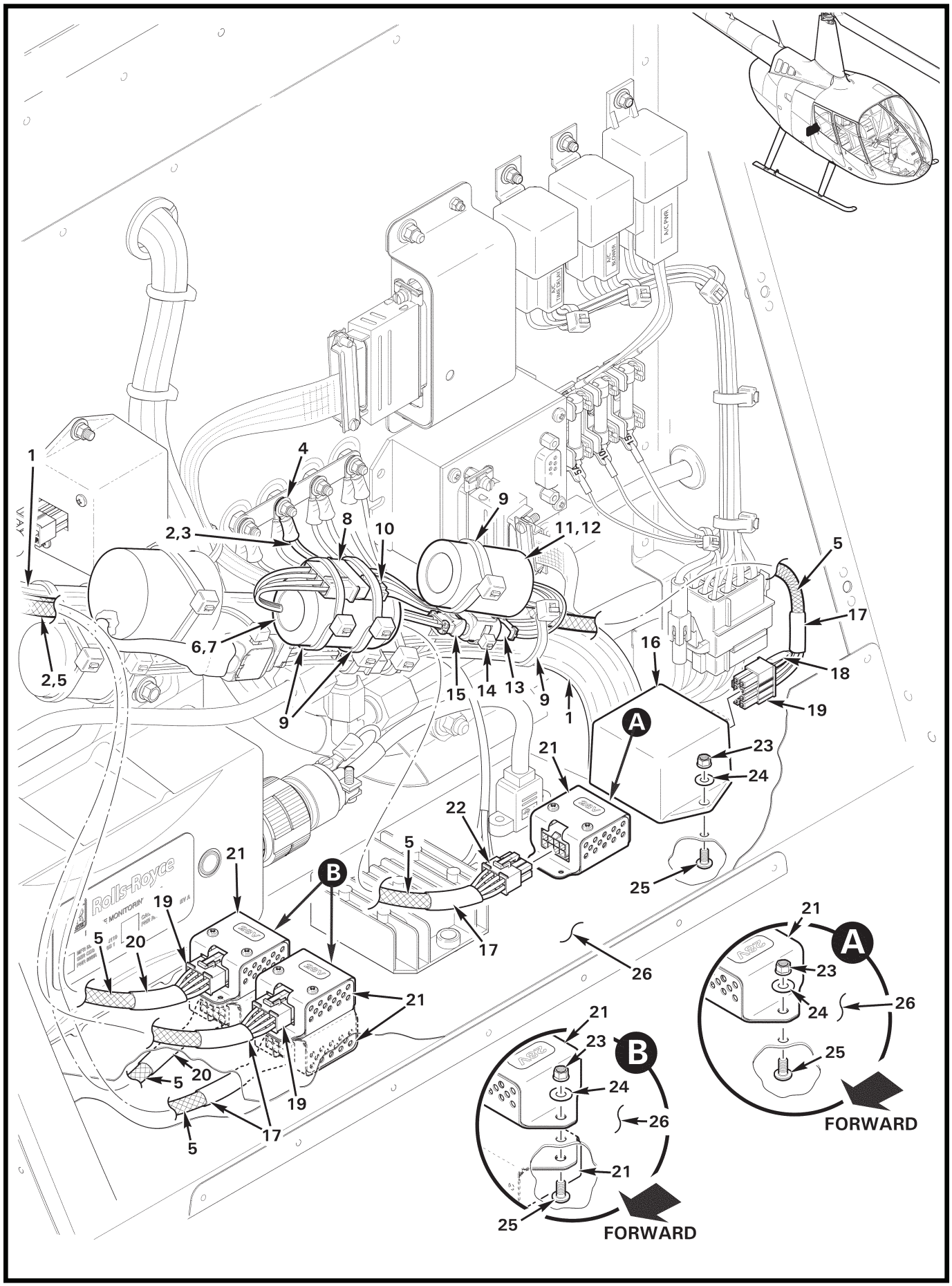
1
4
2,3
8
10
9
11,12
5
17
6,7
16
18
2,5
15
14
13
9
1
19
9
A
23
24
21
22
5
21
B
25
19
5
20
17
26
21
A
23
24
26
25
21
21
23
B
24
26
21
25
FORWARD
FORWARD
Rolls-Royce
MONITORING
5
20
19
17
5

FIGURE AND INDEX NUMBER	PART NUMBER	DESCRIPTION	PARTS AVAIL	QTY PER ASSY
		PRESSURE FUELING SYSTEM – ELECTRICAL COMPONENTS		
28-49-1	F859	Wire Harness Assembly (Ref)		
2	G991-1	Harness Assembly (Includes items 3 thru 5, 10, 15, 17 thru 20, ty-raps, splices, & diodes; see also Figures 28-37, 28-41, & 28-43.)	X	1
3	G991-3166	Wire (Ref)		
	G991-3251	Wire (Ref)		
	G991-3300	Wire (Ref)		
4	B260-3	Terminal (location optional)	X	1
5	B266-4	Sleeving	X	A/R
6	G993-1	Time Delay Assembly (Incl items 7 and 8)	X	1
7	B158-24	Heat Shrink	X	A/R
8	B263-16	Housing	X	1
	B263-1	Pin	X	4
9	MS3367-7-9	Ty-rap	X	A/R
10	B263-17	Housing	X	1
	B263-2	Socket	X	4
11	B280-12	Relay Assembly (Incl items 12 and 13)	X	1
12	B158-12	Heat Shrink	X	A/R
13	D269-1	Plug (includes [3] M39029/58-360 pins)	X	1
14	MS3367-4-9	Ty-rap (locks connector)	X	1
15	D269-2	Receptacle (includes [3] M39029/57-354 sockets	X	1
16	XESR10-S01-FP-0787	Relay – Time Delay	X	1
17	B158-6	Heat Shrink (black)	X	A/R
18	RNC55H1403FS	Resistor	X	1
	B158-2	Heat Shrink (covers resistor)	X	A/R
19	39-01-2085	Housing	X	5
	39-00-0039	Socket	X	6
20	B158-406	Heat Shrink (blue)	X	A/R
21	F695-9	Relay Assembly (Includes C654-22 Decal – "28V". [2] F695-5 assemblies [item 21] located below F679 cover.)	X	5
22	39-01-2085	Housing	X	1
	39-00-0039	Socket	X	5
23	MS21042L08	Nut	X	5
24	NAS1149FN816P	Washer	X	5
25	MS27039C806	Screw	X	5
26	F679	Cover (Ref)		

NOTES

Intentionally Blank

CHAPTER 29

HYDRAULICS

Figure	*Title*	*Page*
29-1	Hydraulic Pump Installation	29.0
29-3	Hydraulic Reservoir Installation	29.2
29-7	Forward Servos Installation	29.6
29-9	Forward Servos Hose Installation	29.8
29-11	Aft Servo Installation	29.10

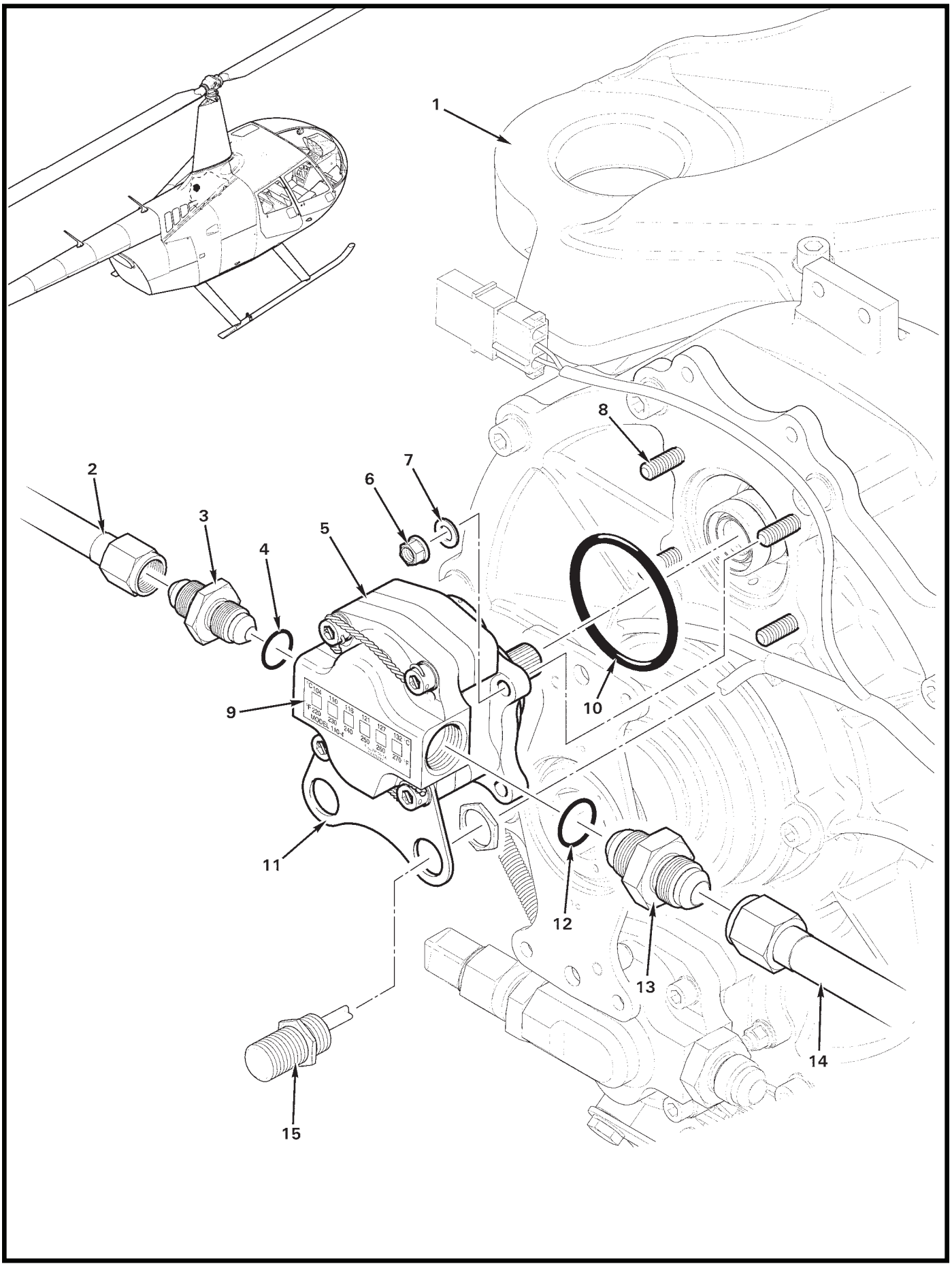
1
2
3
4
5
6
7
8
9
10
11
12
13
14
15

FIGURE AND INDEX NUMBER	PART NUMBER	DESCRIPTION	PARTS AVAIL	QTY PER ASSY
		HYDRAULIC PUMP INSTALLATION		
29-1-1	F006-1	Main Rotor Gearbox Assembly (Ref, see Figure 63-3)		
2	F902-1	Line Assembly (Ref)		
3	AN815-4D	Union	X	1
4	MS28778-4	Packing (o-ring)	X	1
5	D500-2	Pump Assembly (Incl item 11)	X	1
6	MS21042L3	Nut	X	4
7	NAS620-10L	Washer	X	4
8	—	Stud (Ref)		
9	F110-4	Telatemp (temperature recorder, 220° to 270°F)	X	1
10	A215-128	Packing (o-ring)	X	1
11	D114-2	Bracket	X	1
12	MS28778-6	Packing (o-ring)	X	1
13	AN815-6D	Union	X	2
14	F902-2	Line Assembly (Ref)		
15	103SR13A-3	Sender (Ref)		

NOTES

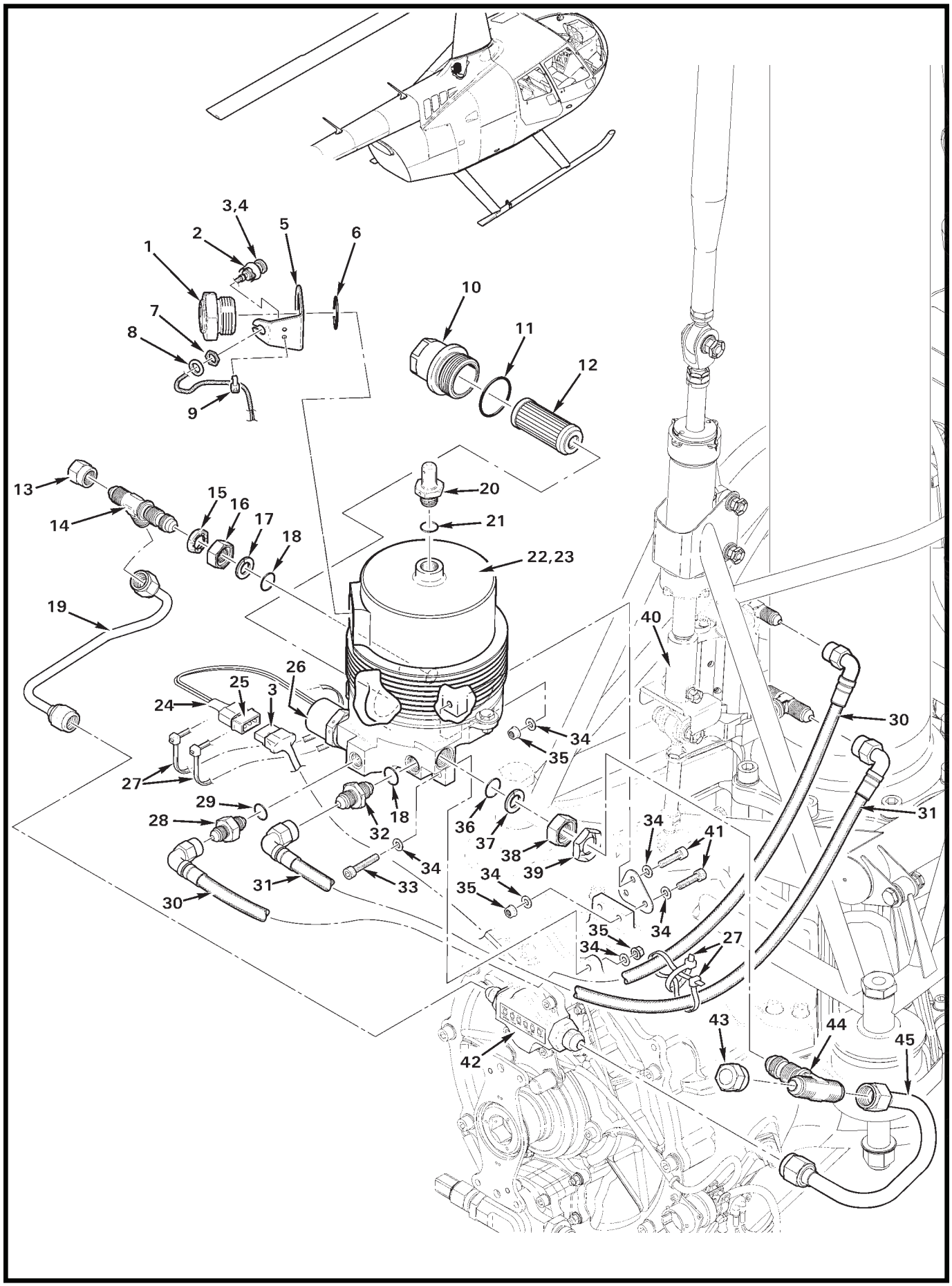

FIGURE 29-3 HYDRAULIC RESERVOIR INSTALLATION

FIGURE AND INDEX NUMBER	PART NUMBER	DESCRIPTION	PARTS AVAIL	QTY PER ASSY
		HYDRAULIC RESERVOIR INSTALLATION		
29-3-1	B563-2	Sight Gage	X	1
2	B158-6	Heat Shrink	X	A/R
3	252-247	Light Assembly (LED; includes items 7 and 8)	O	1
4	F049-01	Harness Assembly (Ref; includes items 2 and 3)		
5	D494-2	Holder	X	1
6	MS28775-020	Packing (o-ring)	X	1
7	—	Nut	O	1
8	—	Washer	O	1
9	MS3367-4-9	Ty-Rap	X	1
10	D516-1	Cap	X	1
11	MS28778-14	Packing (o-ring)	X	1
12	AN6235-1A	Filter	X	1
13	AN820-4	Cap	X	1
14	AN804D4	Tee	X	1
15	B330-21	Palnut	X	1
16	D452-4	Nut	X	1
17	D454-4	Retainer	X	1
18	MS28778-4	Packing (o-ring)	X	2
19	F902-1	Line Assembly	X	1
20	D487-3	Vent Assembly	X	1
21	MS28778-5	Packing (o-ring)	X	1
22	D211-3	Reservoir Assembly (Incl items 1, 5, 6, 10 thru 12, 20, 21, and 24 thru 26)	X	1
23	A257-15	Hydraulic Fluid	X	A/R
24	B158-408	Heat Shrink	X	A/R
25	B263-14	Housing	X	1
	B263-1	Pin	X	2
26	D507-2	Solenoid Assembly (Ref)		
27	MS3367-5-9	Ty-Rap	X	2
28	AN815-3D	Union	X	1
29	MS28775-011	Packing (o-ring)	X	1
30	D205-17	Hose Assembly	X	1
31	D205-18	Hose Assembly	X	1
32	AN815-4D	Union	X	1
33	NAS1351-3-16P	Screw	X	2

NOTES

Continues

FIGURE AND INDEX NUMBER	PART NUMBER	DESCRIPTION	PARTS AVAIL	QTY PER ASSY
		HYDRAULIC RESERVOIR INSTALLATION (Cont'd)		
29-3-34	NAS620-10L	Washer	X	10
35	MS21042L3	Nut	X	5
36	MS28778-6	Packing (o-ring)	X	1
37	D454-6	Retainer	X	1
38	D452-6	Nut	X	1
39	B330-25	Palnut	X	1
40	D212-6	Servo Assembly (Ref)		
41	NAS1351-3-12P	Screw	X	3
42	D500-2	Pump (Ref, see Figure 29-1)		
43	AN820-6	Cap	X	1
44	AN834-6D	Tee	X	1
45	F902-2	Line Assembly	X	1

NOTES

Intentionally Blank

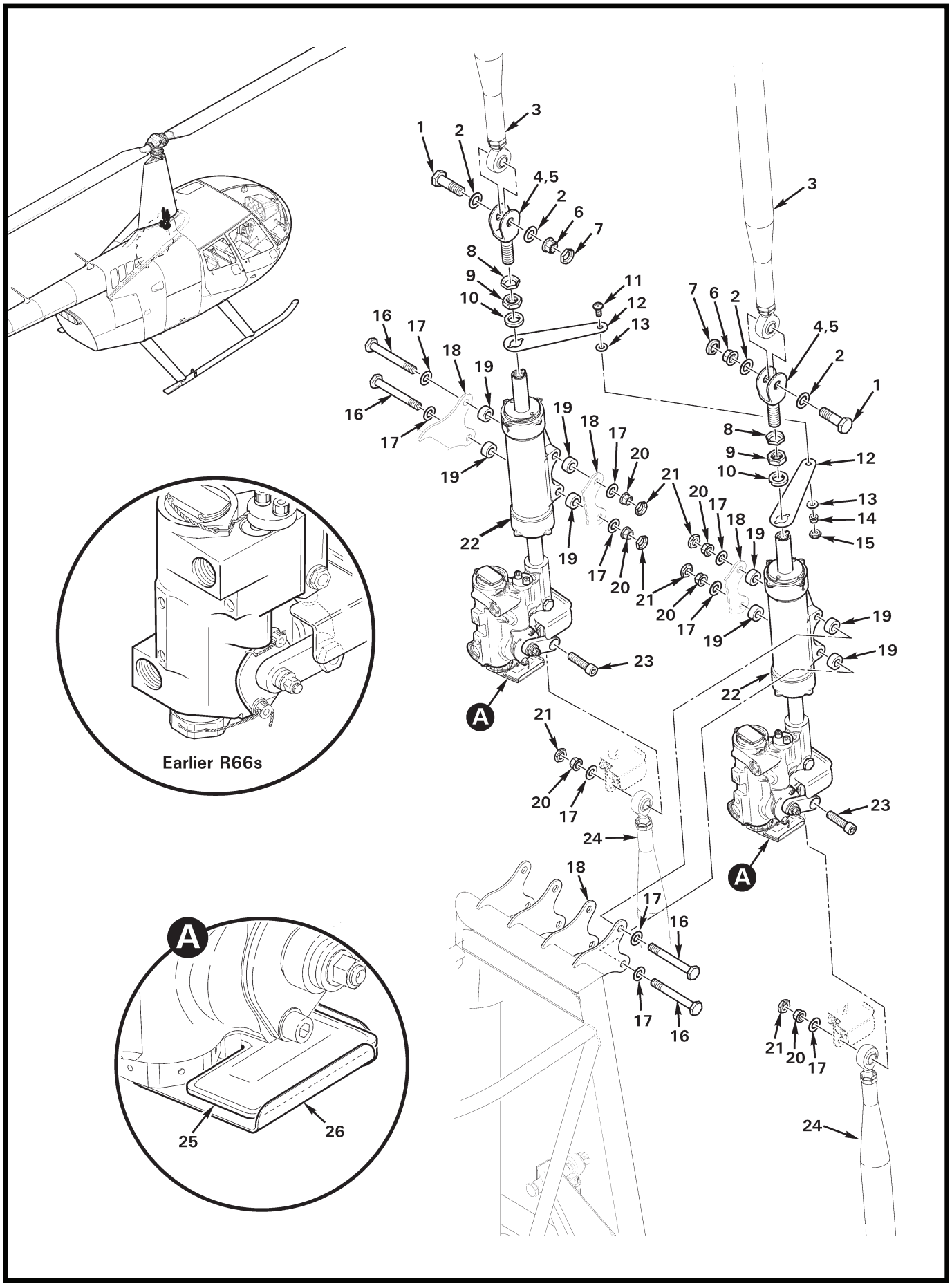
Earlier R66s
A
A
A
1
2
3
4,5
6
7
8
9
10
11
12
13
14
15
16
17
18
19
20
21
22
23
24
25
26

FIGURE AND INDEX NUMBER	PART NUMBER	DESCRIPTION	PARTS AVAIL	QTY PER ASSY
		FORWARD SERVOS INSTALLATION		
29-7-1	NAS6605-9	Bolt	X	2
2	NAS1149F0532P	Washer	X	4
3	F121-3	Push-Pull Tube Assembly (Ref; see Figure 67-27)		
4	D200-1	Clevis (install using item 5)	X	2
5	B270-21	Protectant	X	A/R
6	D210-5	Nut	X	2
7	B330-16	Palnut	X	2
8	B330-19	Palnut	X	2
9	AN316-6R	Nut	X	2
10	D200-3	Washer	X	2
11	MS27039C0806	Screw	X	1
12	D200-2	Scissor (overlap direction not critical)	X	2
13	NAS1149FN832P	Washer	X	2
14	D210-08	Nut	X	1
15	B330-6	Palnut	X	1
16	NAS6604-25	Bolt	X	4
17	NAS1149F0432P	Washer	X	10
18	G201-1	Frame Assembly – Hydraulic Servo Support (Ref; see Figure 53-11)		
19	C130-15	Spacer	X	8
20	D210-4	Nut	X	6
21	B330-13	Palnut	X	6
22	D212-5*	Servo Assembly	X	2
	D212-5R*	D212-5 Servo Assembly (overhaul exchange; requires core deposit)	X	2
23	NAS1351-4-16P	Screw	X	2
24	F121-5	Push-Pull Tube Assembly (Ref; see Figures 67-5 and 67-9)		
25	G801-3	Pad	X	2
26	D525-2	Tray	O	2

NOTES * Later hydraulic servo assemblies include items 25 and 26.

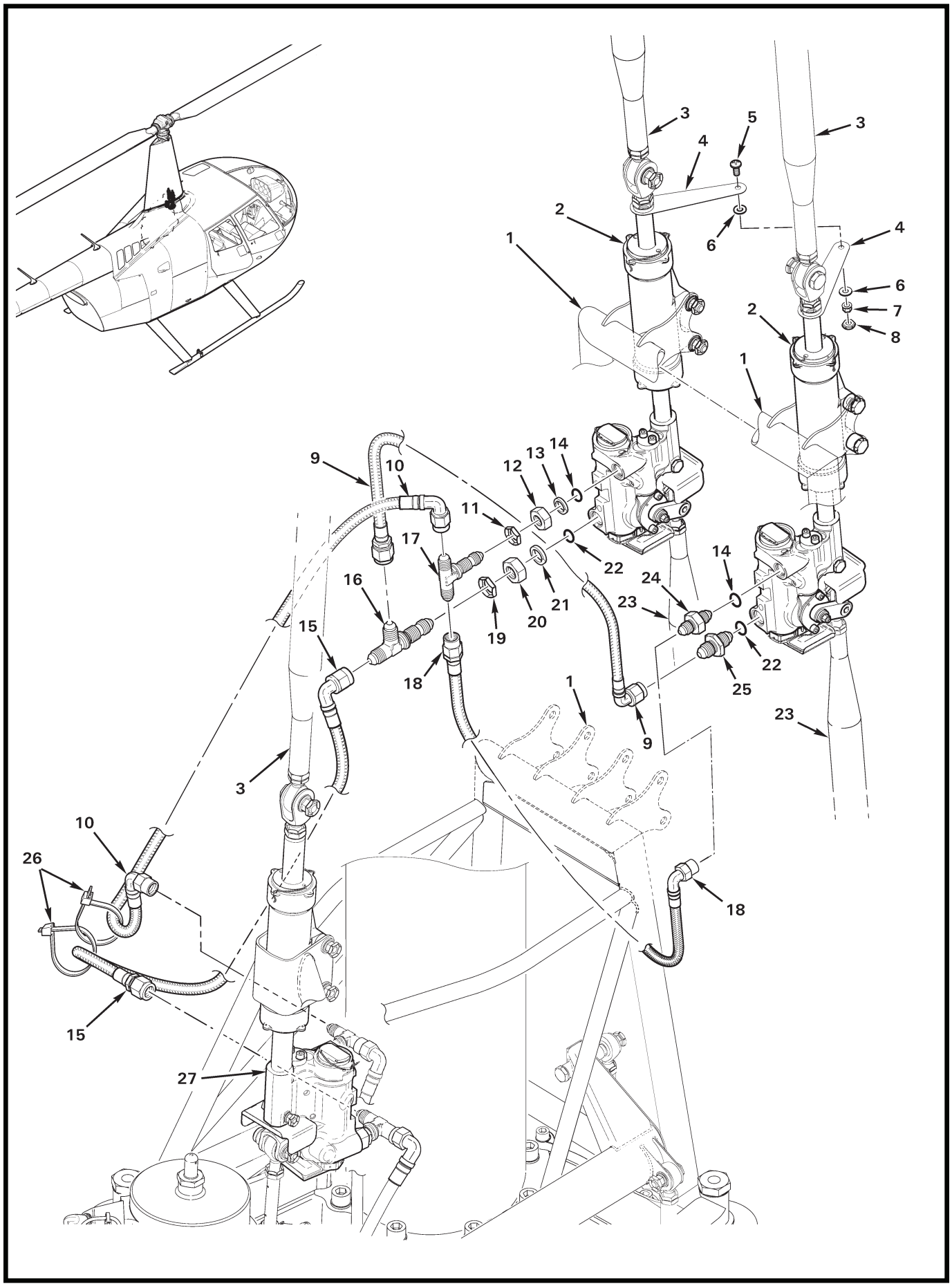
3
5
3
4
2
6
4
1
6
7
2
8
1
9
10
12
13
14
11
17
22
14
16
24
21
23
20
19
15
22
18
25
1
23
9
3
10
26
18
15
27

FIGURE AND INDEX NUMBER	PART NUMBER	DESCRIPTION	PARTS AVAIL	QTY PER ASSY
		FORWARD SERVOS HOSE INSTALLATION		
29-9-1	G201-1	Frame Assembly – Hydraulic Servo Support (Ref; see Figure 53-11)		
2	D212-5	Forward Servo Assembly (Ref; see Figure 29-7)		
3	F121-3	Push-Pull Tube Assembly (Ref; see Figure 67-27)		
4	D200-2	Scissor	X	2
5	MS27039C0806	Screw	X	1
6	NAS1149FN832P	Washer	X	2
7	D210-08	Nut	X	1
8	B330-6	Palnut	X	1
9	D205-24	Hose Assembly	X	1
10	D205-22	Hose Assembly	X	1
11	B330-19	Palnut	X	1
12	D452-3	Nut	X	1
13	D454-3	Retainer	X	1
14	MS28775-011	Packing	X	2
15	D205-23	Hose Assembly	X	1
16	AN804D4	Tee	X	1
17	AN834-3D	Tee	X	1
18	D205-14	Hose Assembly	X	1
19	B330-21	Palnut	X	1
20	D452-4	Nut	X	1
21	D454-4	Retainer	X	1
22	MS28778-4	Packing	X	2
23	F121-5	Push-Pull Tube Assembly (Ref; see Figures 67-5 and 67-9)		
24	AN815-3D	Union	X	1
25	AN815-4D	Union	X	1
26	MS3367-5-9	Ty-Rap (interlocked)	X	2
27	D212-6	Aft Servo Assembly (Ref; see Figure 29-11)		

NOTES

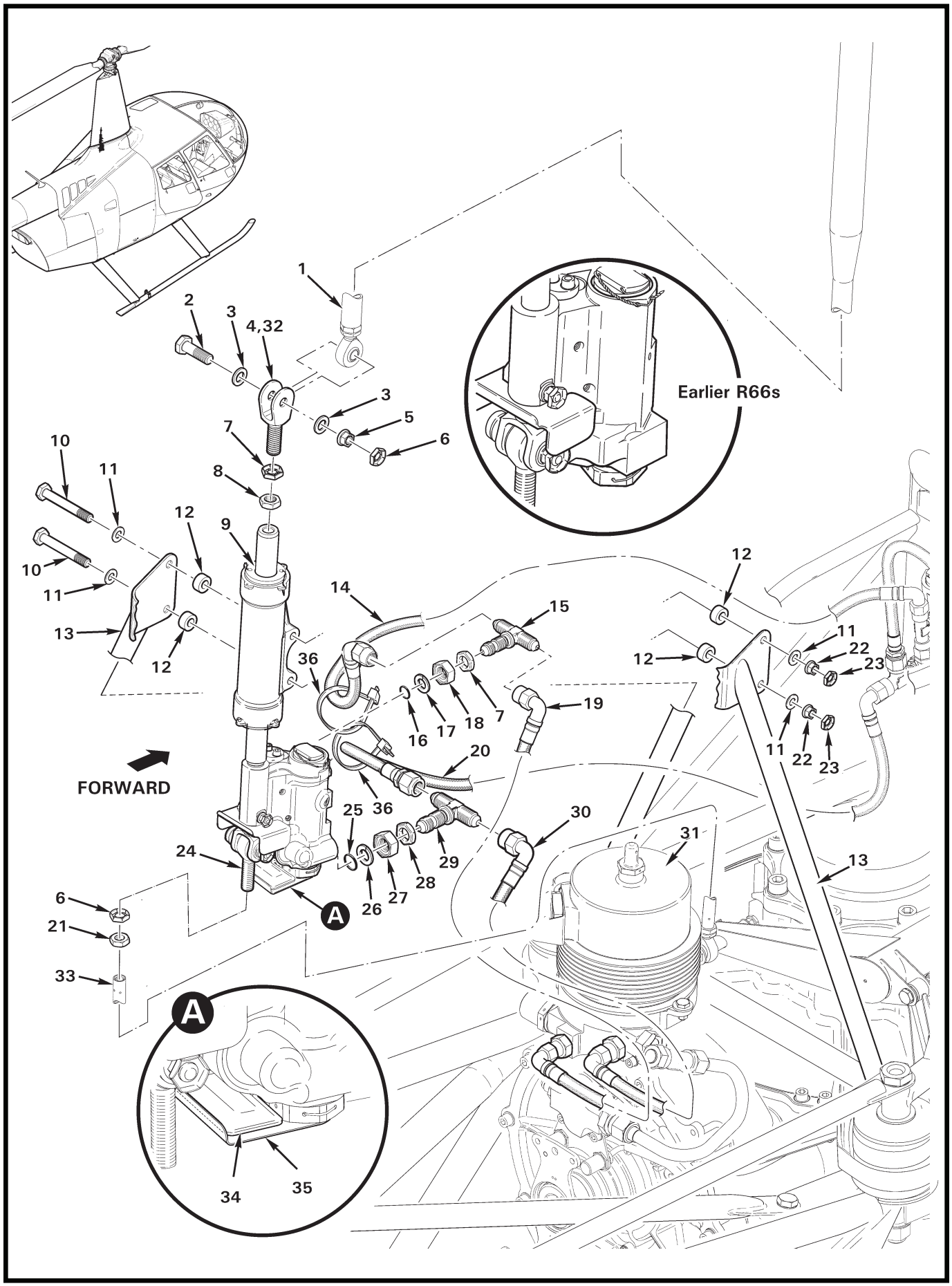
1
2
3
4,32
3
5
6
7
8
9
10
11
10
11
12
12
13
12
14
15
36
16
17
18
7
19
20
36
25
29
30
31
24
28
27
26
A
6
21
33
13
12
11
22
23
12
11
22
23
FORWARD
Earlier R66s
A
34
35

FIGURE AND INDEX NUMBER	PART NUMBER	DESCRIPTION	PARTS AVAIL	QTY PER ASSY
		AFT SERVO INSTALLATION		
29-11-1	F121-3	Push-Pull Tube Assembly (Ref; see Figure 67-27)		
2	NAS6605-9	Bolt	X	1
3	NAS1149F0532P	Washer	X	2
4	D200-1	Clevis (install using item 32)	X	1
5	D210-5	Nut	X	1
6	B330-16	Palnut	X	2
7	B330-19	Palnut	X	2
8	AN316-6R	Nut	X	1
9	D212-6*	Servo Assembly** (includes items 6 [1] and 21)	X	1
	D212-6R*	D212-6 Servo Assembly** (Overhaul exchange; requires core deposit. Includes items 6 [1] and 21.)	X	1
10	NAS6604-25	Bolt	X	2
11	NAS1149F0432P	Washer	X	4
12	C130-15	Spacer	X	4
13	G201-1	Frame Assembly – Hydraulic Servo Support (Ref; see Figure 53-11)		
14	D205-22	Hose Assembly (Ref)		
15	AN834-3D	Tee (aft servo)	X	1
16	MS28775-011	Packing (o-ring)	X	1
17	D454-3	Retainer	X	1
18	D452-3	Nut	X	1
19	D205-17	Hose Assembly	X	1
20	D205-23	Hose Assembly (Ref)		
21	AN316-5R	Nut	X	1
22	D210-4	Nut	X	2
23	B330-13	Palnut	X	2
24	B163-2	Rod End	O	1
25	MS28778-4	Packing (o-ring)	X	1
26	D454-4	Retainer	X	1
27	D452-4	Nut	X	1
28	B330-21	Palnut	X	1
29	AN834-4D	Tee	X	1
30	D205-18	Hose Assembly	X	1
31	D211-3	Reservoir Assembly (Ref; see Figure 29-3)		
32	B270-21	Protectant	X	A/R
33	C343-8	Tube (Ref; see Figure 67-25)		

NOTES * Coat item 24 threads using item 32 before installation.

** Later hydraulic servo assemblies include items 34 and 35.

Continues

FIGURE AND INDEX NUMBER	PART NUMBER	DESCRIPTION	PARTS AVAIL	QTY PER ASSY
		AFT SERVO INSTALLATION (Cont'd)		
29-11-34	G801-3	Pad	X	1
35	D525-2	Tray	O	1
36	MS3367-5-9	Ty-Rap (interlocked)	X	2

NOTES

CHAPTER 32

LANDING GEAR

Figure	*Title*	*Page*
32-1	Landing Gear Assembly	32.0
32-5	Strut Fairing Assembly	32.4
32-7	Pop-Out Floats – Cylinder Assembly Installation	32.6
32-9	Pop-Out Floats – Lever Assembly	32.8
32-11	Pop-Out Floats – Float Assembly Installation	32.10
32-15	Pop-Out Floats – Hose Assembly Installation	32.14
32-17	Pop-Out Floats – Float Assembly and Hose Assembly	32.16
32-19	Skid Step Installation (Small)	32.18
32-21	Skid Step Installation (Long)	32.20

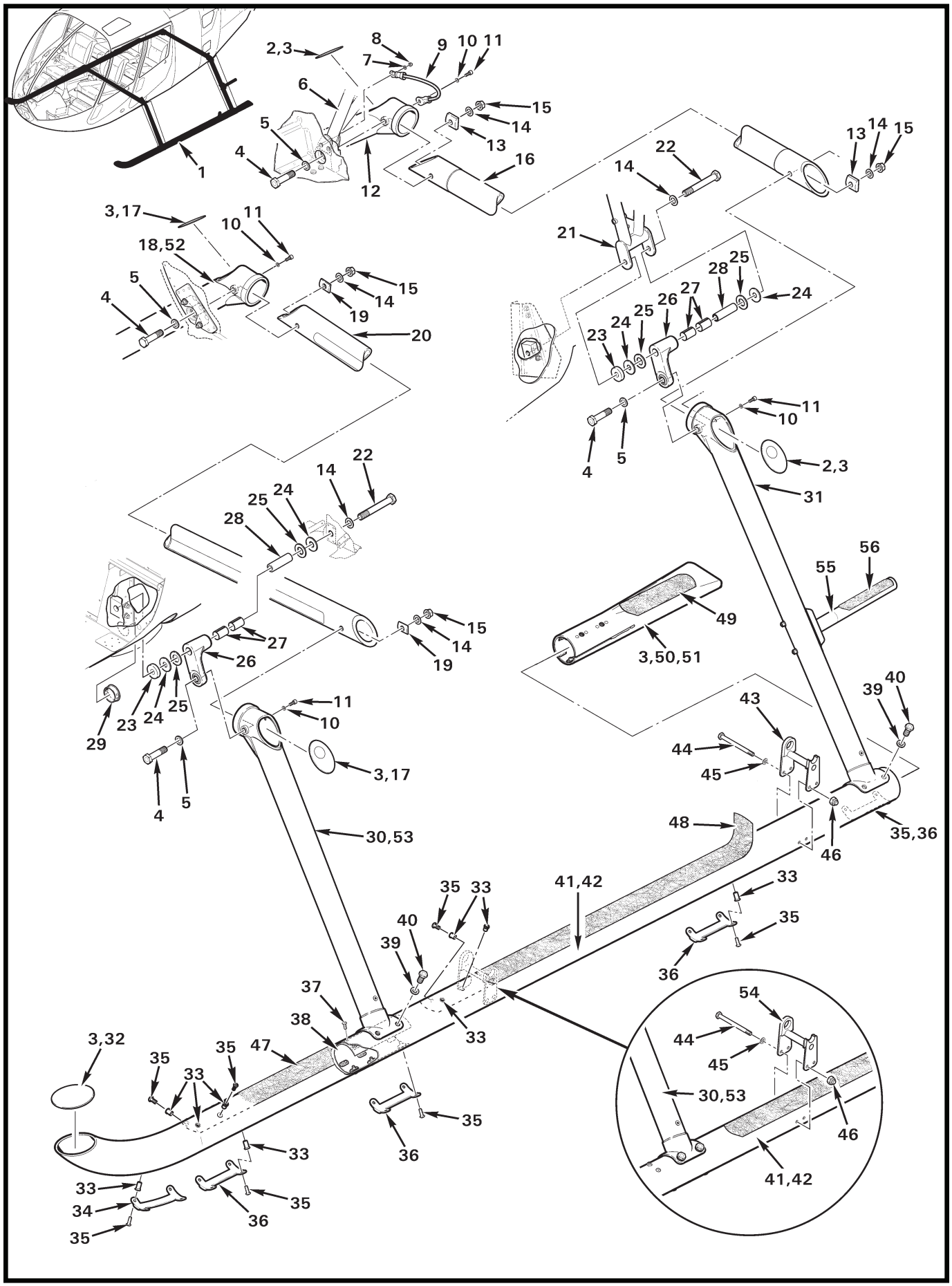
1
2,3
8
9
10
11
7
6
15
14
13
5
4
12
16
22
14
13
14
15
3,17
10
11
18,52
21
5
4
15
14
19
20
28
25
24
26
27
25
24
23
11
10
4
5
2,3
31
22
14
25
24
28
56
55
49
15
14
19
27
26
3,50,51
23
24
25
29
11
10
39
40
43
44
45
4
5
3,17
48
30,53
46
35,36
41,42
33
35
33
40
39
35
36
37
54
38
33
3,32
35
47
44
35
33
45
30,53
35
46
33
36
41,42
33
34
35
36
35

FIGURE AND INDEX NUMBER	PART NUMBER	DESCRIPTION	PARTS AVAIL	QTY PER ASSY
		LANDING GEAR ASSEMBLY		
32-1-1	F014-2	Landing Gear Assembly (Incl items 3, 10 thru 12, 16, 18, 20, and 30 thru 51)	X	1
	F014-5	Landing Gear Assembly – Extended Gear (Incl items 3, 10 thru 12, 16, 20, and 31 thru 53. Optional; STD on Police and ENG ship.)	X	1
2	C247-3	Cap (clear, bond in place with window up, painted side against cross tube, using item 3)	X	2
3	B270-1	Sealant	X	A/R
4	NAS6607-20	Bolt	X	4
5	C141-4	Washer	X	4
6	F046-2	Lower Frame (RH, Ref; see Figure 53-7)		
7	NAS1149F0432P*	Washer (Ref)		
8	MS21042L4*	Nut (Ref)		
9	A936-3*	Wire Assembly	X	1
10	NAS620-10L	Washer	X	4
11	NAS1351-3LE8P	Screw	X	4
12	F239-2	Strut Assembly (RH, aft)	X	1
13	F247-1	Spacer	X	2
14	NAS1149F0732P	Washer	X	6
15	D210-7	Nut	X	4
16	F241-3	Cross Tube (aft)	X	1
17	F411-9	Cap (clear, bond in place with window up, painted side against cross tube, using item 3)	X	2
18	F239-4	Strut Assembly (RH, fwd)	X	1
19	F247-2	Spacer	X	2
20	F241-4	Cross Tube (forward)	X	1
21	F046-1	Lower Frame (LH, Ref)		
22	NAS6607-44	Bolt	X	2
23	C141-6	Washer	X	2
24	C141-5	Washer	X	4
25	A214-10	Washer	X	4
26	C276-3	Shackle Assembly	X	2
27	LJS-1016	Bearing	X	4
28	C105-1	Journal	X	2
29	2740	Hole Plug	X	1
30	F239-3	Strut Assembly (LH, fwd)	X	1

NOTES * Earlier aircraft.

Continues

FIGURE AND INDEX NUMBER	PART NUMBER	DESCRIPTION	PARTS AVAIL	QTY PER ASSY
		LANDING GEAR ASSEMBLY (Cont'd)		
32-1-31	F239-1	Strut Assembly (LH, aft)	X	1
32	C247-1	Rain Cap (install using item 3)	X	2
33	NAS1330H3K116L	Rivnut	X	30
34	A667-8	Skid Shoe (curved)	X	2
35	A142-1	Screw	X	44
36	A667-7	Skid Shoe (straight)	X	8
37	A142-3	Screw	X	8
38	C246-5	Liner Assembly (LH, includes nutplates)	X	1
	C246-6	Liner Assembly (RH, includes nutplates)	X	1
39	NAS1149F0663P	Washer	X	16
40	NAS6606-4	Bolt	X	16
41	C242-7	Skid Tube Assembly (LH, includes C242-5 skid tube, and items 3, 32, 33, 37, 38)	O	1
	C242-9*	Skid Tube Assembly (LH, includes C242-7 and is painted)	X	1
42	C242-8	Skid Tube Assembly (RH, includes C242-6 skid tube, and items 3, 32, 33, 37, 38; not shown)	O	1
	C242-10*	Skid Tube Assembly (RH, includes C242-8 and is painted)	X	1
43	C719-1	Support Weldment	X	2
44	NAS6604-46**	Bolt	X	4
45	NAS1149F0432P**	Washer	X	4
46	B340-10**	Nut	X	4
47	A751-4	Strip (not installed on ships with skid steps; see Figure 32-19)	X	2
48	A751-5	Strip	X	2
	A751-9	Strip (install on ships with skid steps)	X	2
49	A751-6	Strip (installed on item 50 [LH] only; earlier ships without item 55)	X	1
50	C937-1	Skid Extension (LH, fill gap with item 3)	X	1
51	C937-2	Skid Extension (RH, fill gap with item 3, not shown)	X	1
52	F239-6	Strut Assembly – Extended Gear (RH; not shown)	X	1
53	F239-5	Strut Assembly – Extended Gear (LH; not shown)	X	1
54	C719-1	Support Weldment (Police and ENG ships)	X	2
55	F780-1	Step Assembly (see Figure 32-19)	X	1
56	A751-7	Strip	X	1

NOTES * Spares; revision P and subsequent have provisions for Skid Steps.

** Quantity is [8] each when item 54 is installed

Intentionally Blank

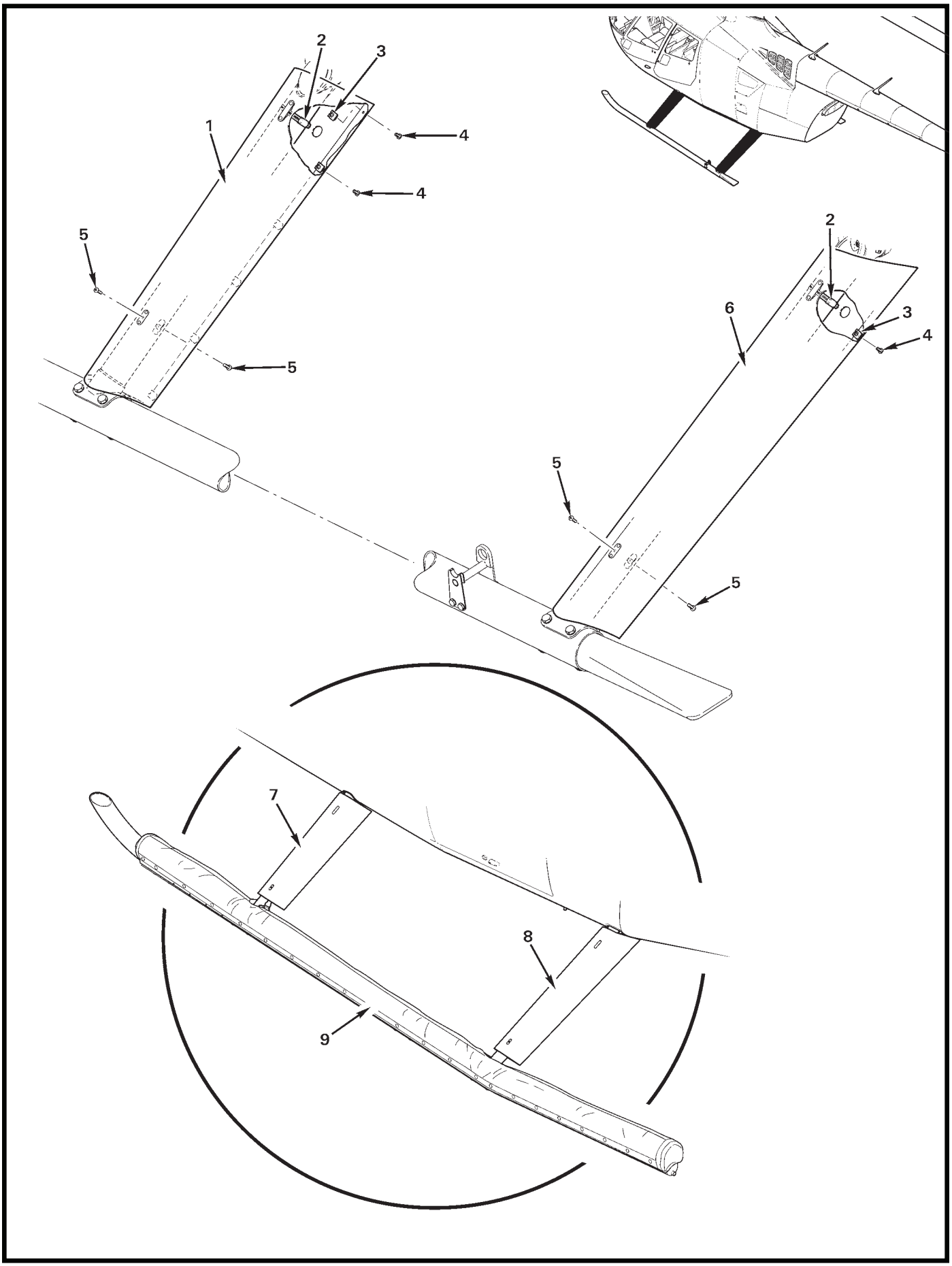

FIGURE 32-5 STRUT FAIRING ASSEMBLY

FIGURE AND INDEX NUMBER	PART NUMBER	DESCRIPTION	PARTS AVAIL	QTY PER ASSY
		STRUT FAIRING ASSEMBLY		
32-5-1	F082-3	Fairing Assembly – Forward (LH)	X	1
	F082-2	Fairing Assembly – Forward (RH, not shown)	X	1
	F082-23	Fairing Assembly – Forward (LH, not shown; Extended Gear)	X	1
	F082-22	Fairing Assembly – Forward (RH, not shown; Extended Gear)	X	1
2	B277-28	Clamp	X	4
3	B162-3	Clipnut	X	26
4	B526-6	Screw (rev. E and subsequent fairing assemblies)	X	26
	MS27039C0805	Screw (rev. D or earlier fairing assemblies)	X	26
5	MS27039C0810	Screw	X	8
6	F082-5	Fairing Assembly – Aft (LH)	X	1
	F082-4	Fairing Assembly – Aft (RH, not shown)	X	1
7	F082-13*	Fairing Assembly – Forward (LH)	X	1
	F082-12*	Fairing Assembly – Forward (RH, not shown)	X	1
8	F082-15*	Fairing Assembly – Aft (LH)	X	1
	F082-14*	Fairing Assembly – Aft (RH, not shown)	X	1
9	C950	Float Tube (Ref)		

NOTES * Pop-out Float equipped R66s.

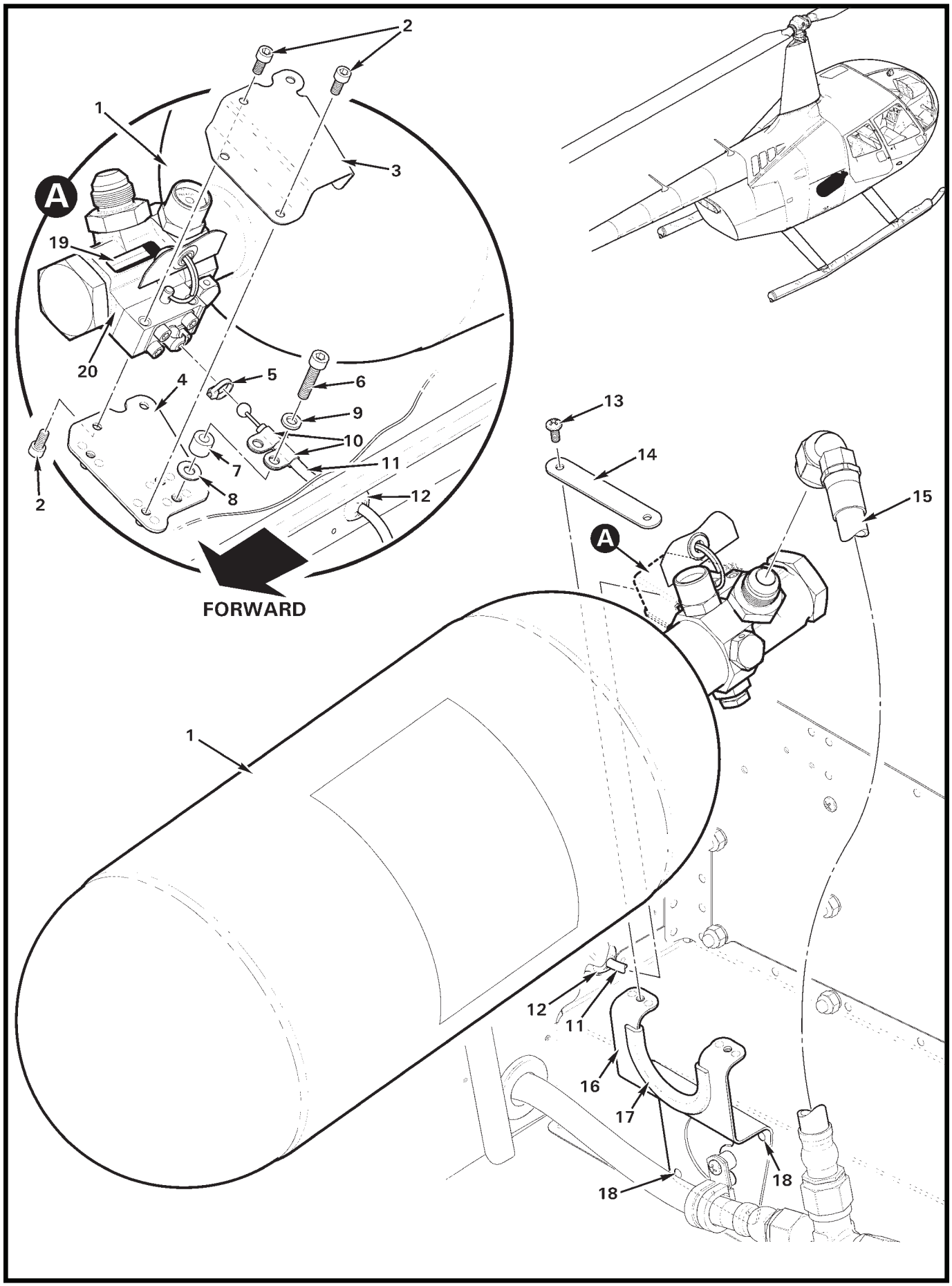
2
1
3
A
19
20
4
5
6
9
10
7
11
8
2
12
FORWARD
13
14
15
A
1
12
11
16
17
18
18

FIGURE AND INDEX NUMBER	PART NUMBER	DESCRIPTION	PARTS AVAIL	QTY PER ASSY
		POP-OUT FLOATS – CYLINDER ASSEMBLY INSTALLATION		
32-7-1	D679-3	Cylinder Assembly	X	1
2	NAS1352-08-6P	Screw	X	6
3	D761-2	Cover	X	1
4	D761-1	Support Assembly	X	1
5	MS3367-4-9	Ty-rap	X	1
6	NAS1351-3-14P	Screw	X	2
7	C130-26	Spacer	X	2
8	NAS1149F0332P	Washer	X	2
9	NAS620-10	Washer	X	2
10	AN735-3	Clamp	X	2
11	D676-2	Cable Assembly (Use item 5 to retain ball in bottle trigger. Ref, see Figure 32-9.)		
12	B270-1	Sealant	X	A/R
13	MS27039C0806	Screw	X	2
14	D669-3	Strap	X	1
15	D674-9	Hose Assembly	X	1
16	D669-6	Cradle Assembly (Incl item 17)	X	1
17	A226-11	Trim	X	A/R
18	MS20470AD4	Rivet	X	6
19	—	Data Plate (Ref; B900-8 modification, D758-2 with D758-4 attributes)		
20	D758-4	Housing (Ref)		
	D758-2	Housing with B900-8 Modification (Ref; D758-2 with D758-4 attributes, includes item 19)		

NOTES

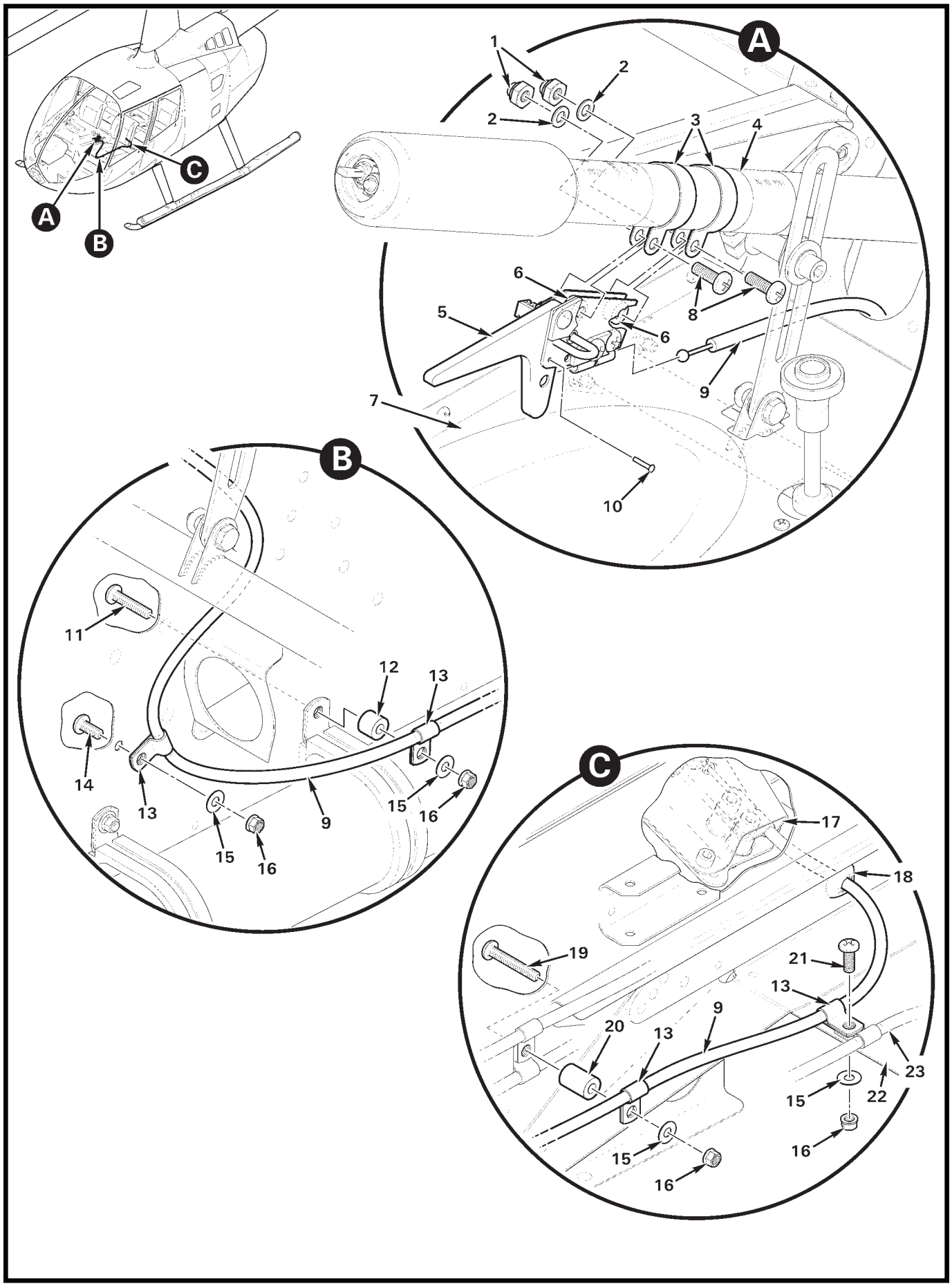
A
B
C
1
2
2
3
4
5
6
6
7
8
9
10
11
12
13
13
14
15
15
16
16
9
17
18
19
20
21
13
9
13
23
22
15
16
15
16

FIGURE AND INDEX NUMBER	PART NUMBER	DESCRIPTION	PARTS AVAIL	QTY PER ASSY
		POP-OUT FLOATS – LEVER ASSEMBLY		
32-9-1	B340-8	Nut	X	2
2	NAS620-10L	Washer	X	2
3	D675-4	Clamp	X	2
4	F758-1	Collective Stick Assembly – Pilot (RH, Ref; see Figure 67-15 for complete assembly)		
5	D680-1	Lever Assembly (Incl items 1 thru 3, 6, 8, and 10)	X	1
6	A130-21	Spacer	X	2
7	F445-3	Cover Assembly (Ref, see Figure 6-1)	X	2
8	MS27039C1-09	Screw	X	2
9	D676-2	Cable Assembly	X	1
10	MS20470A2-6-5	Rivet	X	1
11	MS27039C0812	Screw	X	1
12	A130-33	Spacer	X	1
13	AN742-3	Clamp	X	4
14	MS27039C0806	Screw	X	1
15	NAS1149FN816P	Washer	X	4
16	MS21042L08	Nut	X	4
17	D761-1	Support Assembly – Valve, Float Ships (Ref, see Figure 32-7)		
18	B270-1	Sealant	X	A/R
19	MS27039C0816	Screw	X	1
20	A130-38	Spacer	X	1
21	MS27039C0808	Screw	X	1
22	F375-1	Cover (Ref)		
23	A522-14	Control (Ref)		

NOTES

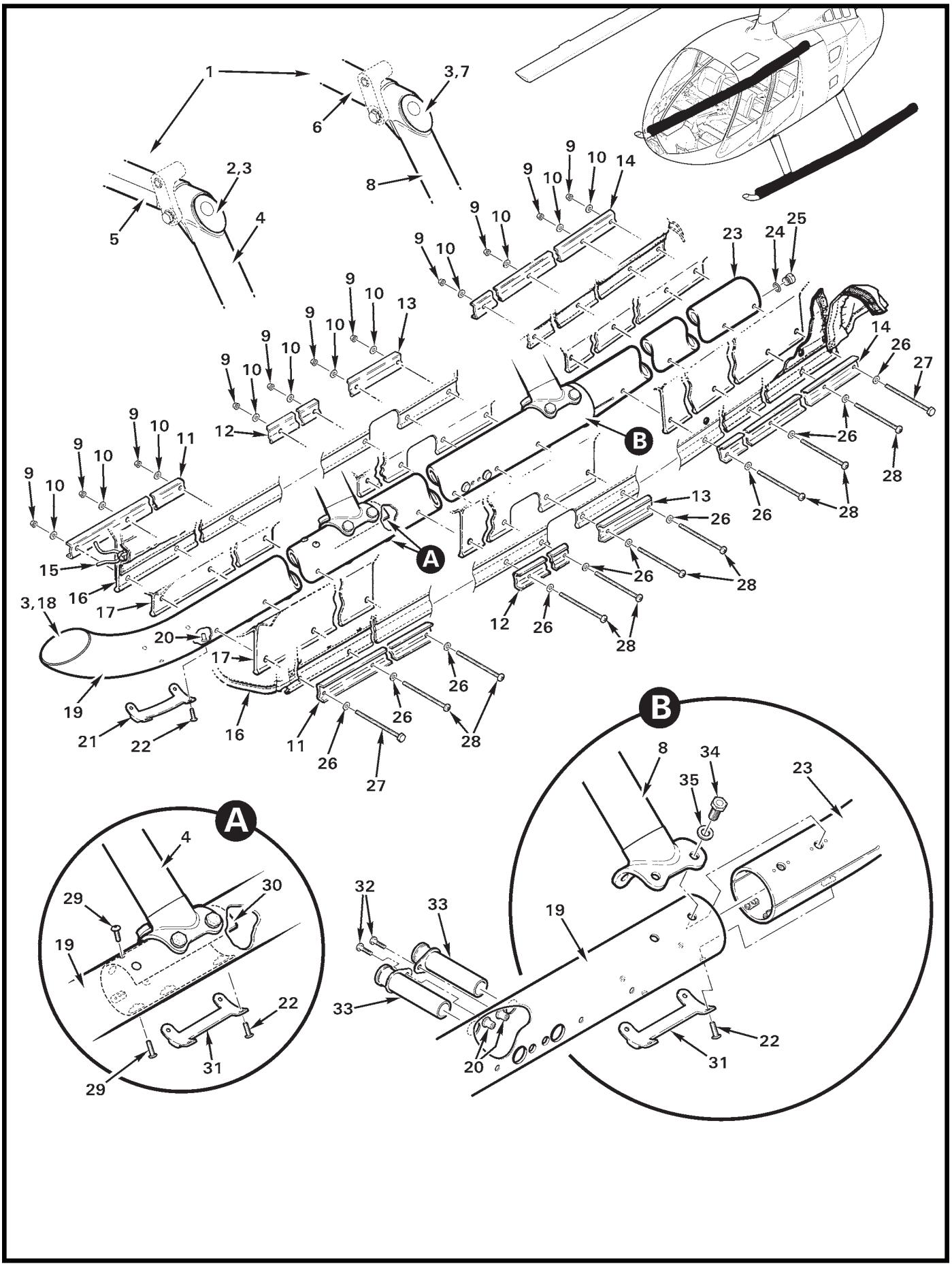
1
3,7
6
2,3
8
5
4
9
10
14
25
24
23
13
12
11
15
16
17
3,18
20
19
21
22
26
27
28
A
B
29
30
31
32
33
34
35

FIGURE AND INDEX NUMBER	PART NUMBER	DESCRIPTION	PARTS AVAIL	QTY PER ASSY
		POP-OUT FLOATS – FLOAT ASSEMBLY INSTALLATION		
32-11-1	F014-4	Landing Gear Assembly – Pop-Out Floats (Incl items 2 thru 8, 19, 23, 34, and 35)	X	1
2	F411-9	Rain Cap – Forward (Ref, install using item 3)		
3	B270-1*	Sealant (2 oz. tube)	X	A/R
4	F239-3	Strut Assembly – Forward (LH)	X	1
	F239-4	Strut Assembly – Forward (RH)	X	1
5	F241-4*	Cross Tube – Forward (Ref)		
6	F241-3*	Cross Tube – Aft (Ref)		
7	C247-3	Rain Cap – Aft (Ref, install using item 3)		
8	F239-1	Strut Assembly – Aft (LH)	X	1
	F239-2	Strut Assembly – Aft (RH)	X	1
9	MS21042L3	Nut	X	62
10	NAS1149F0332P**	Washer (or NAS1149F0363P as required for proper nut engagement)	X	A/R
11	C944-1	Strip	X	4
12	C944-4	Strip	X	4
13	C944-5	Strip	X	4
14	C944-3	Strip	X	4
15	M11029	Cord	X	1
16	C950-17	Cover (LH; SMR Float. Includes item 15.)	X	1
	C950-25	Cover (LH; ACC Float. Includes item 15.)	X	1
	C950-18	Cover (RH, SMR Float, not shown. Includes item 15.)	X	1
	C950-26	Cover (RH; ACC Float, not shown. Includes item 15.)	X	1
17	C950-19 or -23	Float Assembly – LH (Ref, see Figure 32-17)		
	C950-20 or -24	Float Assembly – RH (Ref, see Figure 32-17; not shown)		
18	C247-1	Rain Cap (bond in place using item 3)	X	2
19	C943-7	Skid Tube (LH; does not include item 23)	X	1
	C943-8	Skid Tube (RH; does not include item 23)	X	1
20	NAS1330H3K116L	Rivnut	X	24
21	A667-8	Skid Shoe (curved, install using item 22)	X	2
22	A142-1	Screw	X	40
23	C945-1	Skid Extension (LH)	X	1
	C945-2	Skid Extension (RH, not shown)	X	1
24	A215-013	O-Ring	X	1
25	B202-1	Drain Plug Assembly (Incl item 24)	X	2

NOTES * See also Figure 32-1.

** See R66 Maintenance Manual for location and usage.

Continues

FIGURE AND INDEX NUMBER	PART NUMBER	DESCRIPTION	PARTS AVAIL	QTY PER ASSY
		POP-OUT FLOATS – FLOAT ASSEMBLY INSTALLATION (Cont'd)		
32-11-26	NAS1149F0332P*	Washer (or NAS1149F0363P as required)	X	A/R
27	AN3-32A*	Bolt (or MS27039DD1-47 or -51 screw as required for proper nut engagement)	X	4
28	MS27039DD1-51*	Screw (or MS27039DD1-47 or AN3-32A Bolt [item 27] as required for proper nut engagement)	X	58
29	A142-3	Screw	X	8
30	C246-5	Liner Assembly (left skid)	X	1
	C246-6	Liner Assembly (right skid)	X	1
31	A667-7	Skid Shoe (straight)	X	8
32	MS27039C1-09	Screw	X	4
33	D724-1	Sleeve Weldment (2 per skid)	X	4
34	NAS6606-4	Bolt	X	16
35	NAS1149F0663P	Washer	X	16

NOTES * See R66 Maintenance Manual for location and usage.

Intentionally Blank

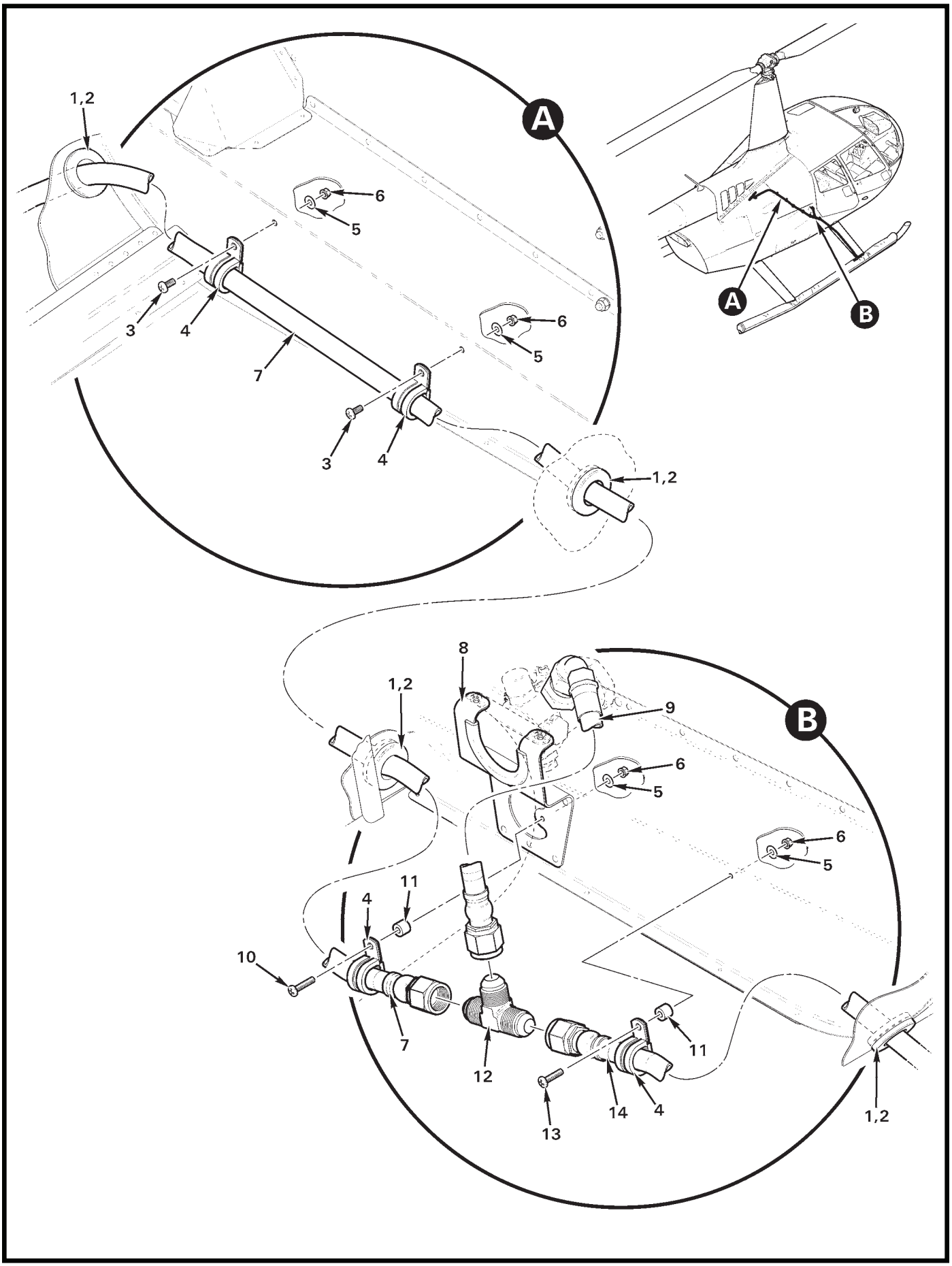
A
1,2
6
5
3
4
7
6
5
3
4
1,2
A
B
B
8
1,2
9
6
5
6
5
11
4
10
7
12
11
13
14
4
1,2

FIGURE AND INDEX NUMBER	PART NUMBER	DESCRIPTION	PARTS AVAIL	QTY PER ASSY
		POP-OUT FLOATS – HOSE ASSEMBLY INSTALLATION		
32-15-1	MS35489-20	Grommet (Seal around both sides of grommet and item 7 with item 2, inside baggage compartment.)	X	4
2	B270-1	Sealant	X	A/R
3	MS27039C0806	Screw	X	2
4	MS21919WDG10	Clamp	X	4
5	NAS1149FN816P	Washer	X	4
6	MS21042L08	Nut	X	4
7	D674-13	Hose Assembly (Ref, see Figure 32-17)		
8	D669-6	Cradle Assembly	X	1
9	D674-9	Hose Assembly	X	1
10	MS27039C0812	Screw	X	1
11	A130-33	Spacer	X	2
12	AN824-8D	Tee	X	1
13	MS27039C0811	Screw	X	1
14	D674-12	Hose Assembly (Ref, see Figure 32-17)		

NOTES

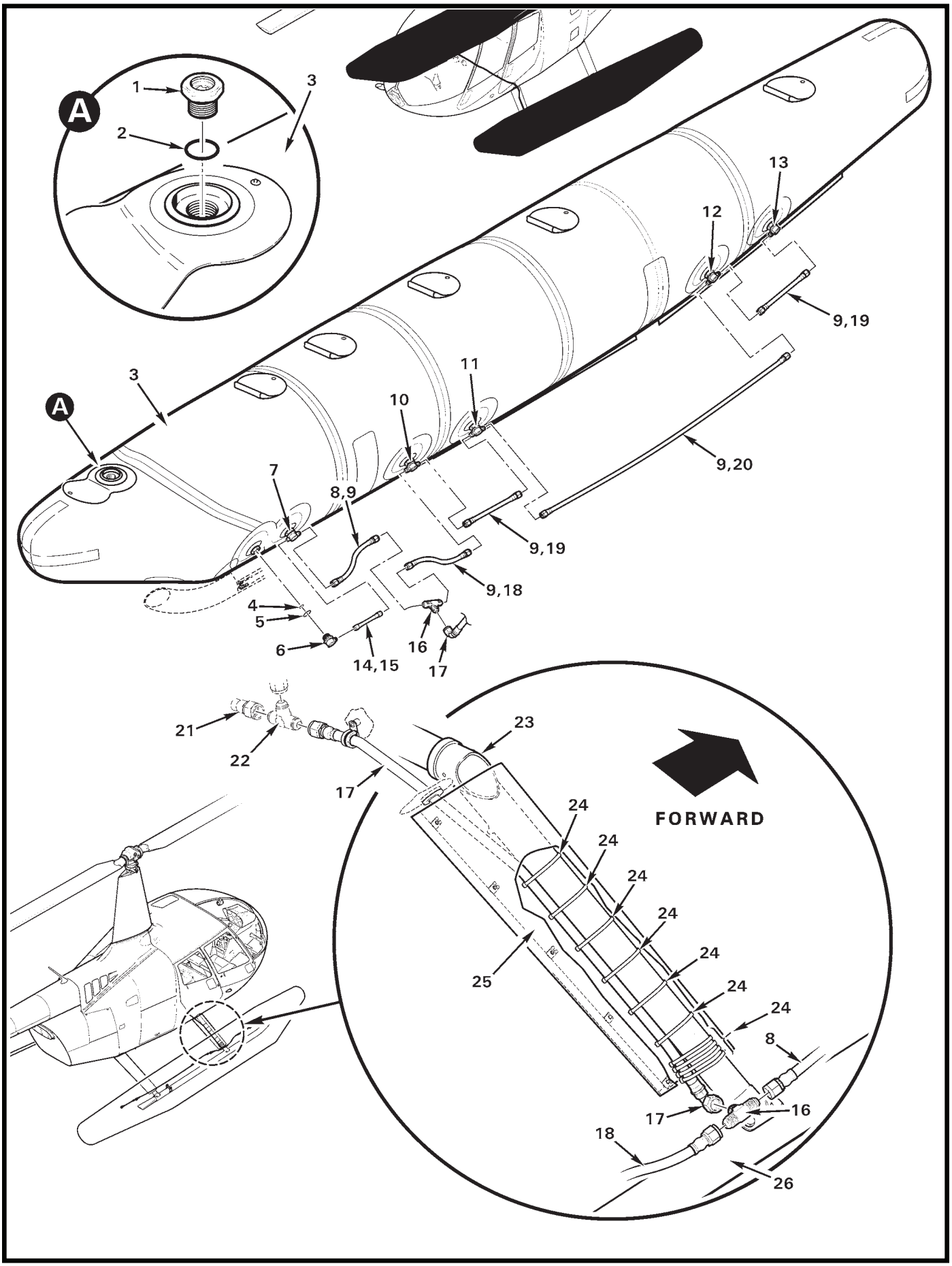
A
1
2
3
A
3
13
12
9,19
11
10
9,20
7
8,9
9,19
9,18
4
5
6
14,15
16
17
21
22
23
17
FORWARD
24
24
24
24
24
24
24
25
8
17
16
18
26

FIGURE AND INDEX NUMBER	PART NUMBER	DESCRIPTION	PARTS AVAIL	QTY PER ASSY
		POP-OUT FLOATS – FLOAT ASSEMBLY AND HOSE ASSEMBLY		
32-17-1	A-53001	Valve – Pressure Topping and Relief (Incl item 2)	X	6
2	A215-212	O-Ring	X	1
3	C950-24*	Float Tube Assembly – RH (Six chamber, includes item 1)	X	1
	C950-20**	Float Tube Assembly – RH (Six chamber, includes item 1)	X	1
	C950-23*	Float Tube Assembly – LH (Six chamber, includes item 1)	X	1
	C950-19**	Float Tube Assembly – LH (Six chamber, includes item 1)	X	1
4	A215-110	O-Ring	X	1
5	A215-212	O-Ring	X	1
6	D770-1	Valve Assembly (Incl items 4 and 5)	X	1
7	D770-2	Valve Assembly (Incl items 4 and 5)	X	1
8	D674-11	Hose Assembly (Incl item 9)	X	1
9	B158-116	Heat Shrink	X	A/R
10	D770-3	Valve Assembly (Incl items 4 and 5)	X	1
11	D770-4	Valve Assembly (Incl items 4 and 5)	X	1
12	D770-5	Valve Assembly (Incl items 4 and 5)	X	1
13	D770-6	Valve Assembly (Incl items 4 and 5)	X	1
14	D674-7	Hose Assembly (Incl item 15)	X	1
15	B158-12	Heat Shrink	X	A/R
16	AN824-8D	Tee (install using item 27)	X	2
17	D674-12	Hose Assembly (Incl item 9)	X	2
18	D674-10	Hose Assembly (Incl item 9)	X	2
19	D674-6	Hose Assembly (Incl item 9)	X	3
20	D674-2	Hose Assembly (Incl item 9)	X	2
21	D674-13	Hose Assembly (Ref, see Figure 32-15)		
22	AN824-8D	Tee (Ref, see Figure 32-15)		
23	F239-4	Strut Assembly – Forward, RH (Ref; see Figure 32-1)		
24	MS3367-7-9	Ty-Rap ([10] per forward strut assembly)	X	20
25	F082-12	Fairing Assembly – Forward, RH (Ref; see Figure 32-5)		
26	C943-8	Skid Tube – RH (Ref)		
27	B270-22	Protectant	X	A/R

NOTES * Manufactured by Air Crusiers.
** Manufactured by SMR Technologies, Inc.

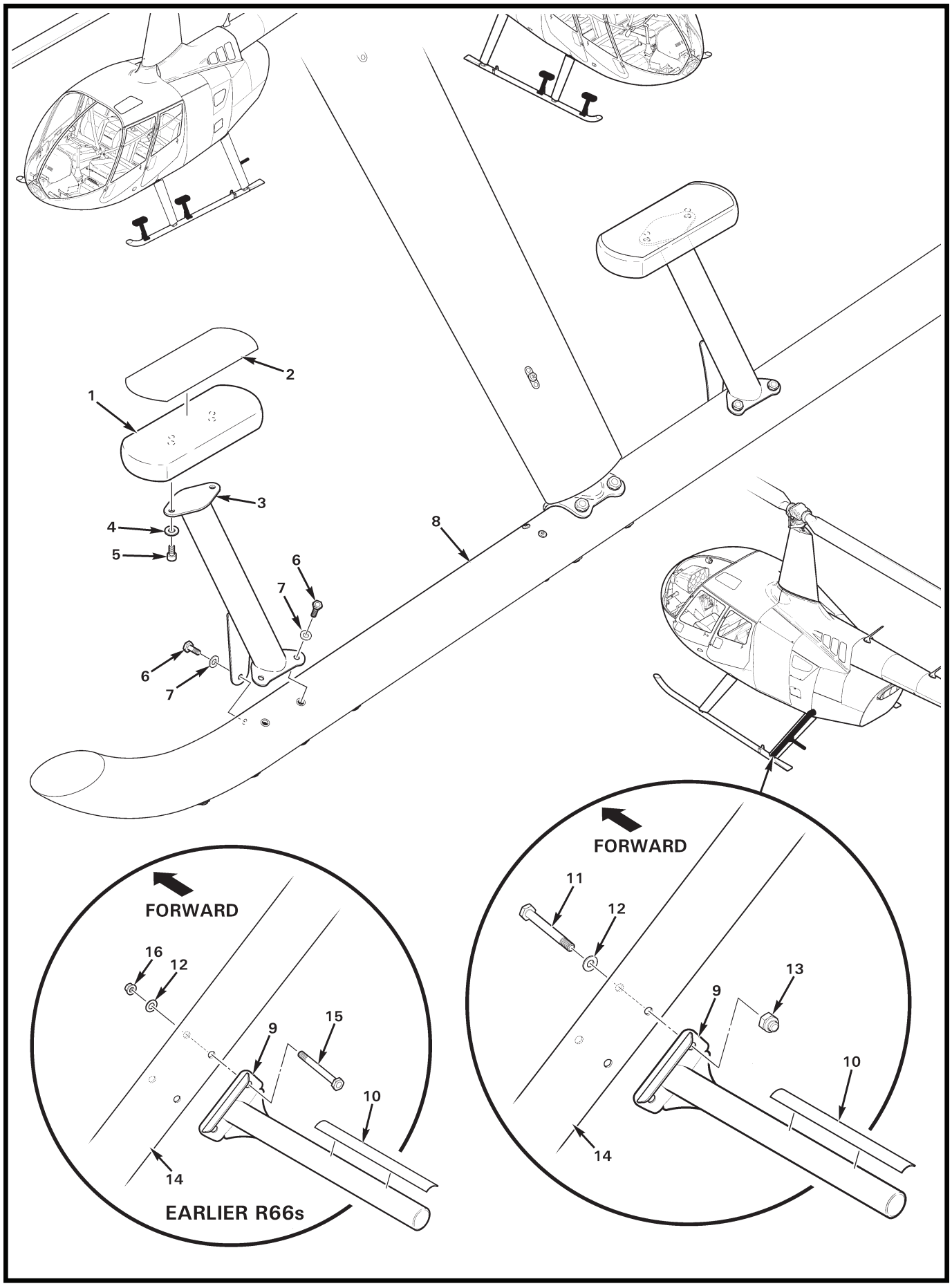
1
2
3
4
5
6
7
6
7
8
FORWARD
16
12
9
15
10
14
EARLIER R66s
FORWARD
11
12
13
9
10
14

FIGURE AND INDEX NUMBER	PART NUMBER	DESCRIPTION	PARTS AVAIL	QTY PER ASSY
		SKID STEP INSTALLATION (SMALL)*		
32-19-1	F781-1	Step Assembly (incl item 2)	X	4
2	A751-8	Strip	X	1
3	F780-2	Support Weldment (RH and LH, FWD and AFT)	X	1
4	NAS1149F0363P	Washer	X	2
5	NAS1351-3-8P	Screw	X	2
6	NAS6603-3	Bolt	X	3
7	NAS1149F0332P	Washer	X	3
8	C242-7	Skid Tube Assembly (LH)	O	1
	C242-9**	Skid Tube Assembly (LH, includes C242-7 and is painted)	X	1
	C242-8	Skid Tube Assembly (RH)	O	1
	C242-10**	Skid Tube Assembly (RH, includes C242-8 and is painted)	X	1
9	F780-1	Step Assembly (left aft strut only; includes item 10)	X	1
10	A751-7	Strip	X	1
11	NAS6604-31	Bolt	X	2
12	NAS1149F0432P	Washer	X	2
13	B340-10	Nut	X	2
14	F239-1	Strut Assembly (ref; revision J and subsequent include provisions for F780-1 step installation)		
15	NAS6604-32	Bolt	X	2
16	D210-4	Nut	X	2

NOTES
* Optional equipment; cannot be installed with floats. Flight with one or more step assemblies and mounting hardware removed is permissible; quantities shown are for one step assembly.

** Revision O and subsequent Skid Tube Assemblies include provisions for Skid Step installation.

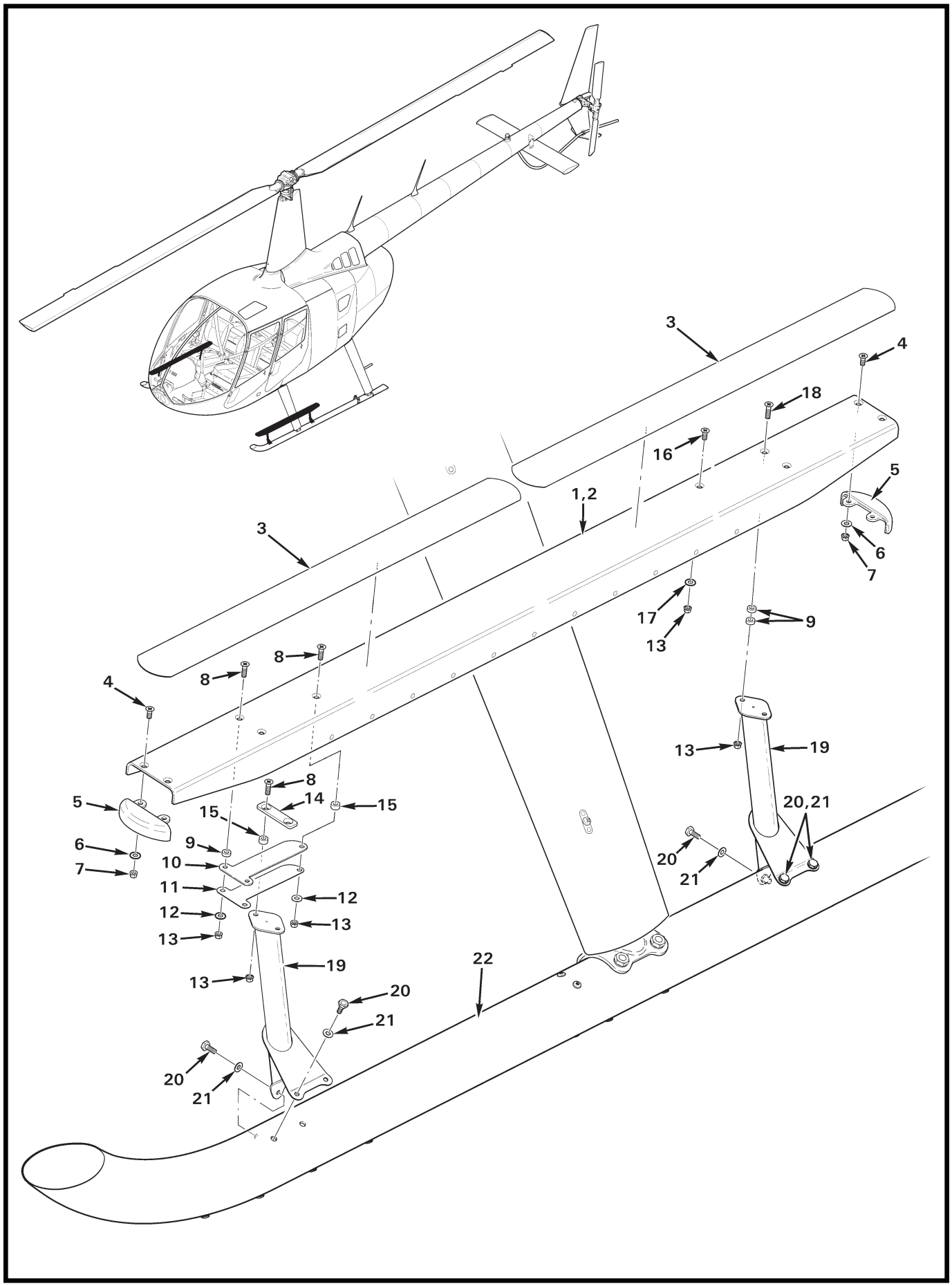
3
4
18
16
5
1,2
6
7
3
17
9
13
8
8
4
13
19
8
14
15
5
15
20,21
9
6
10
20
7
21
11
12
12
13
13
19
22
13
20
21
20
21

FIGURE AND INDEX NUMBER	PART NUMBER	DESCRIPTION	PARTS AVAIL	QTY PER ASSY
		SKID STEP INSTALLATION (LONG)*		
32-21-1	F782-5	Step Assembly — LH (incl items 2, 3, and 8 thru 19; install with sliders in FWD location)	X	1
	F782-6	Step Assembly — RH (incl items 2, 3, and 8 thru 19; install with sliders in FWD location; not shown)	X	1
2	F782-4	Step Assembly (LH or RH; includes items 4 thru 7)	X	1
3	A751-10	Strip (self-adhesive)	X	2
4	MS24694-S49	Screw	X	4
5	F783-4	Cap	X	2
6	NAS1149F0332P	Washer	X	4
7	D210-3	Nut	X	4
8	MS24694-S52	Screw	X	5
9	A130-20	Spacer	X	6
10	F783-6	Slider, plastic	X	1
11	F783-3	Slider, metal	X	1
12	NAS1149F0332P	Washer	X	3
13	D210-3	Nut	X	8
14	F783-5	Pad	X	1
15	A130-21	Spacer	X	3
16	MS24694-S49	Screw	X	1
17	NAS1149F0363P	Washer	X	1
18	MS24694-S53	Screw	X	2
19	F780-3	Support Weldment (LH or RH)	X	2
20	NAS6603-3	Bolt	X	6
21	NAS1149F0332P	Washer	X	6
22	C242-7	Skid Tube Assembly (LH)	O	1
	C242-9**	Skid Tube Assembly (LH, includes C242-7 and is painted)	X	1
	C242-8	Skid Tube Assembly (RH)	O	1
	C242-10**	Skid Tube Assembly (RH, includes C242-8 and is painted)	X	1

NOTES
* Optional equipment; cannot be installed with floats. Flight with one or more step assemblies and mounting hardware removed is permissible; quantities shown are for one step assembly.

** Revision O and subsequent Skid Tube Assemblies include provisions for Skid Step installation.

Intentionally Blank

CHAPTER 33

LIGHTS

Figure	*Title*	*Page*
33-1	Strobe Light Installation	33.0
33-3	Navigation Lights Installation	33.2
33-7	HID Landing Lights Installation	33.6
33-9	Cabin Interior Lighting Installation	33.8
33-13	Spotlight Installation	33.12
33-15	MRGB LED Light System	33.14

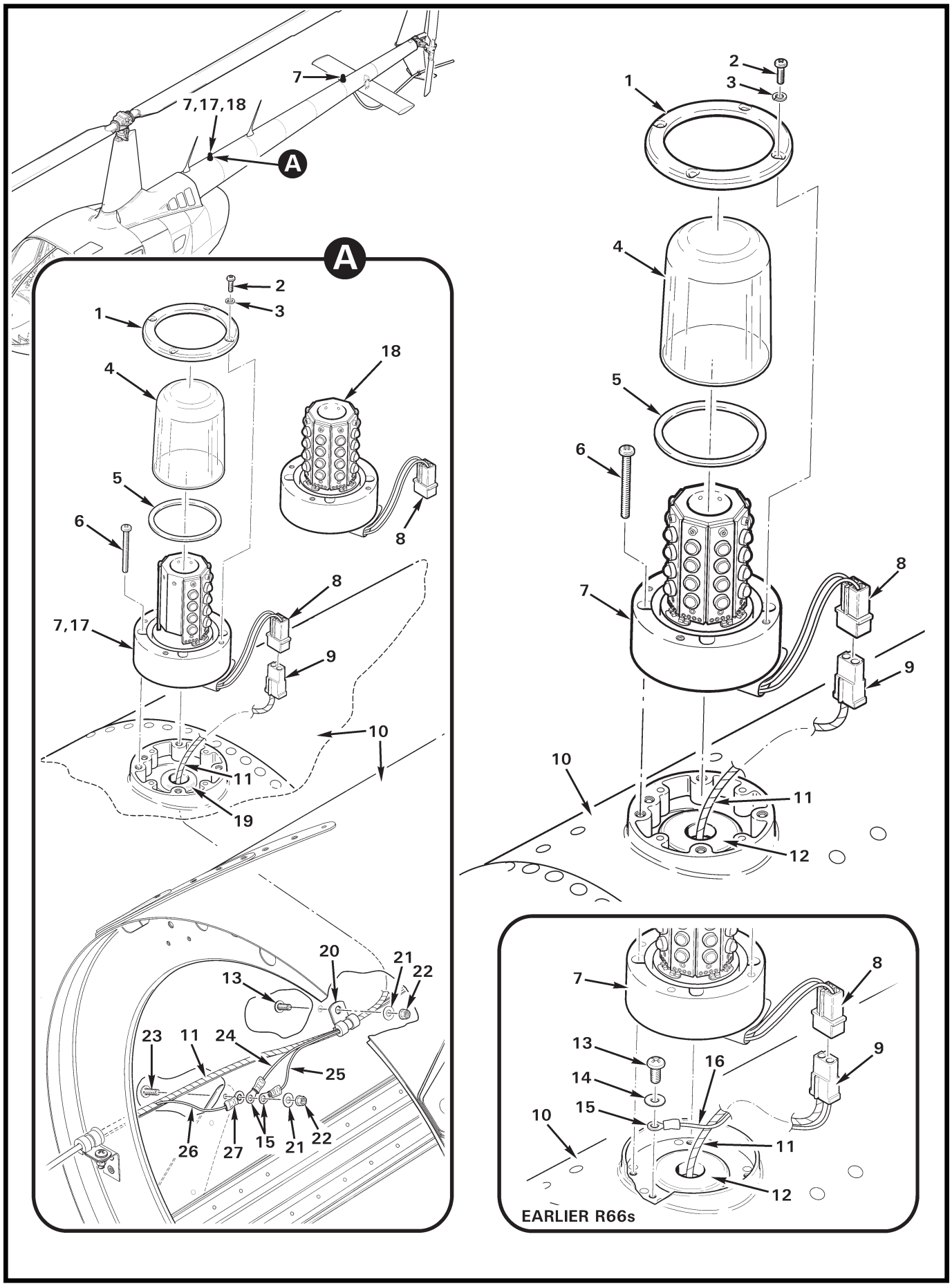
7
7,17,18
A
A
1
2
3
4
5
6
7,17
8
9
10
11
12
13
14
15
16
18
19
20
21
22
23
24
25
26
27
EARLIER R66s

FIGURE AND INDEX NUMBER	PART NUMBER	DESCRIPTION	PARTS AVAIL	QTY PER ASSY
		STROBE LIGHT INSTALLATION		
33-1-1	19-171047-100*	Retainer	O	1
2	14-0050505-14*	Screw	O	4
3	16-0050506135*	Lockwasher (MS35338-135)	O	4
4	68-4971082A30*	Lens	O	1
5	38-0250885-00*	Gasket	O	1
6	MS35206-234	Screw	X	4
7	A708-13**	Strobe Light Assembly – Red LED (Incl items 1 thru 5, and 8)	X	1
8	02-0230007-00*	Housing	O	1
	—	Pin	O	2
9	B263-13	Housing	X	1
	B263-2	Socket	X	2
10	C023	Tailcone Assembly (Ref)		
11	B161-2	Spirap	X	A/R
12	MS35489-15	Grommet	X	1
13	MS27039C0806	Screw (or MS27039C0805, ENG ships)	X	1
14	NAS1149FN832P	Washer	X	1
15	B260-3	Terminal	X	A/R
16	-2039	Wire (Ref; ground, aft strobe light, earlier R66s)		
17	A708-16**	Strobe Light Assembly – White LED (Includes items 1 thru 5, and 8. Orient with blank strips facing forward.)	X	1
18	A708-15**	Strobe Light Assembly – Blue LED (R66 Police only. Includes items 1 thru 5, and 8.)	X	1
19	MS35489-11	Grommet	X	1
20	MS21919WDG2	Clamp	X	1
21	NAS1149FN816P	Washer	X	2
22	MS21042L08	Nut	X	2
23	MS27039C0808	Screw	X	1
24	-2039	Wire (Ref; ground, aft strobe light)		
25	-2734**	Wire (Ref; ground, forward strobe light)		
26	-2854	Wire (Ref; ground, tailcone)		
27	B260-9	Terminal	X	1

NOTES * Whelen part number.

** Forward strobe light installation is optional equipment.

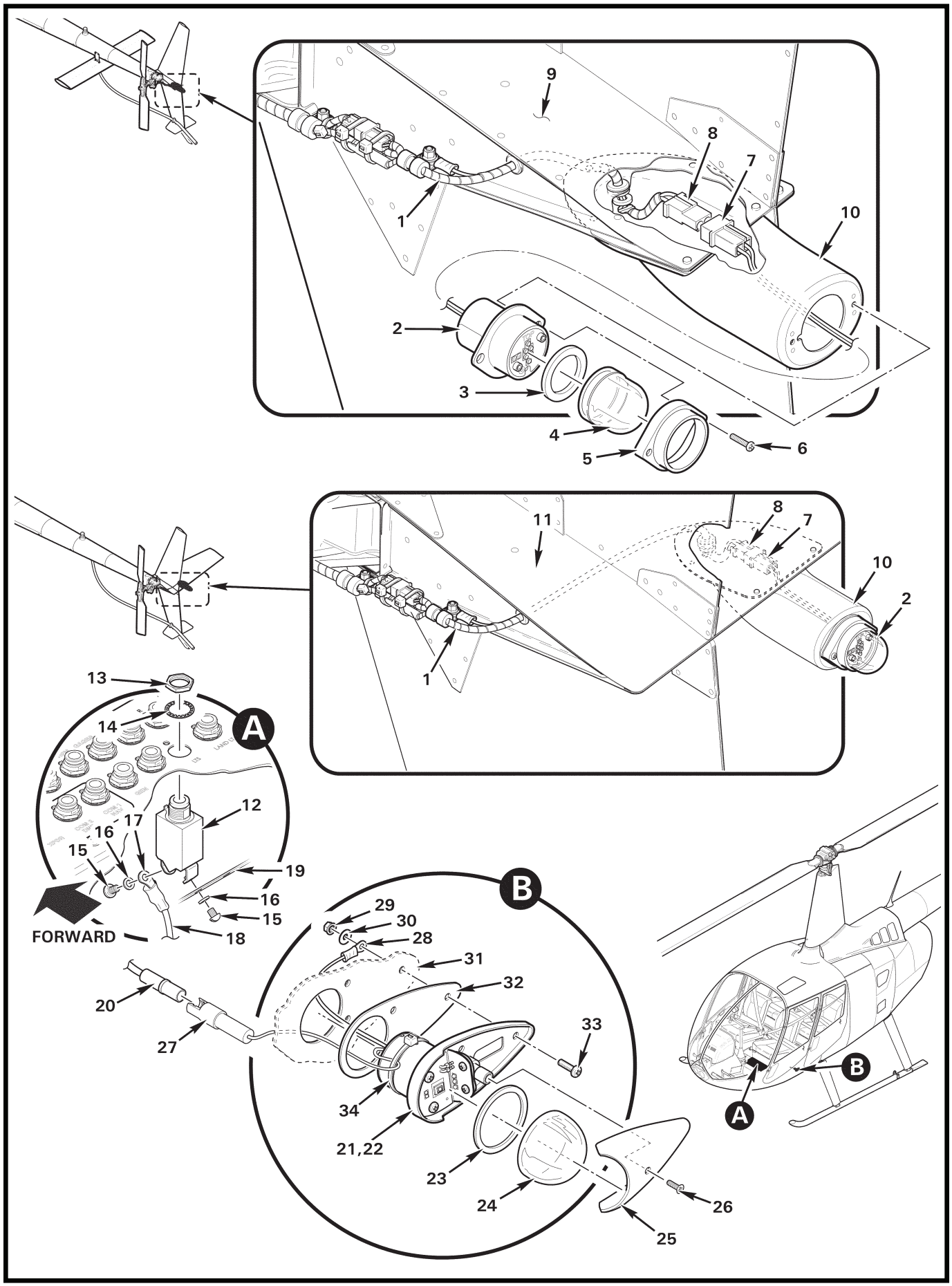
9
8
7
1
10
2
3
4
5
6
11
8
7
10
2
1
13
14
A
12
17
16
15
19
16
15
18
FORWARD
B
29
30
28
31
32
20
27
33
34
21,22
23
24
26
25
B
A

FIGURE AND INDEX NUMBER	PART NUMBER	DESCRIPTION	PARTS AVAIL	QTY PER ASSY
		NAVIGATION LIGHTS INSTALLATION		
33-3-1	D049-8*	Wire Harness – Tail Light (Ref; includes item 8)		
2	01-0771554-01**	Tail Light Assembly (LED; includes items 3 thru 7)	X	1
3	38-0231061-00**	Gasket	O	1
4	68-3970991-30**	Lens	O	1
5	19-0150350-03**	Lens Retainer	O	1
6	14-0050505-18**	Screw (alternate part no. MS51957-18)	O	2
	—	Nut (not shown, replaced by nutplates in item 10)	O	2
7	B263-12	Housing	X	1
	B263-1	Pin	X	2
8	B263-13*	Housing (Ref)		
	B263-2*	Socket (Ref)		
9	F044-1*	Mount Assembly (Ref)		
10	C529-1*	Mount Assembly – Tail Light (Ref)		
11	C044*	Stabilizer – Horizontal (Ref)		
12	B297-5	Circuit Breaker (5 amp; includes items 13 thru 16)	X	1
13	—	Nut	O	1
14	—	Lockwasher	O	1
15	—	Screw	O	2
16	—	Washer	O	2
17	B260-2	Terminal (Ref)		
18	-104	Wire (Ref)		
19	A448	Bus Bar (Ref)		
20	B263-11	Housing (Ref)		
	B263-2	Socket (Ref)		
21	A039-19	Position Light Assembly – LH (LED; includes items 23 thru 28)	X	1
	01-0771105-04**	Position Light (red LEDs)	X	1
22	A039-20	Position Light Assembly – RH (LED; includes items 23 thru 28)	X	1
	01-0771105-03**	Position Light (green LEDs)	X	1
23	38-0230021-00**	Gasket	O	1
24	68-3950902A30**	Lens (clear)	O	1
25	19-150002-010**	Retainer	O	1
26	14-0050508-27**	Screw	O	1
27	B263-10	Housing	X	1
	B263-1	Socket	X	1
28	B260-2	Terminal	X	1

NOTES * See Figures 53-25 and 53-29.

** Whelen part number.

Continues

FIGURE AND INDEX NUMBER	PART NUMBER	DESCRIPTION	PARTS AVAIL	QTY PER ASSY
		NAVIGATION LIGHTS INSTALLATION (Cont'd)		
33-3-29	MS21042L06	Nut	X	3
30	NAS1149FN616P	Washer	X	3
31	F272	Chin Assembly (Ref)		
32	A779-1	Gasket	X	1
33	MS35206-230	Screw	X	3
34	MS3367-5-0	Ty-Rap	X	1

NOTES

Intentionally Blank

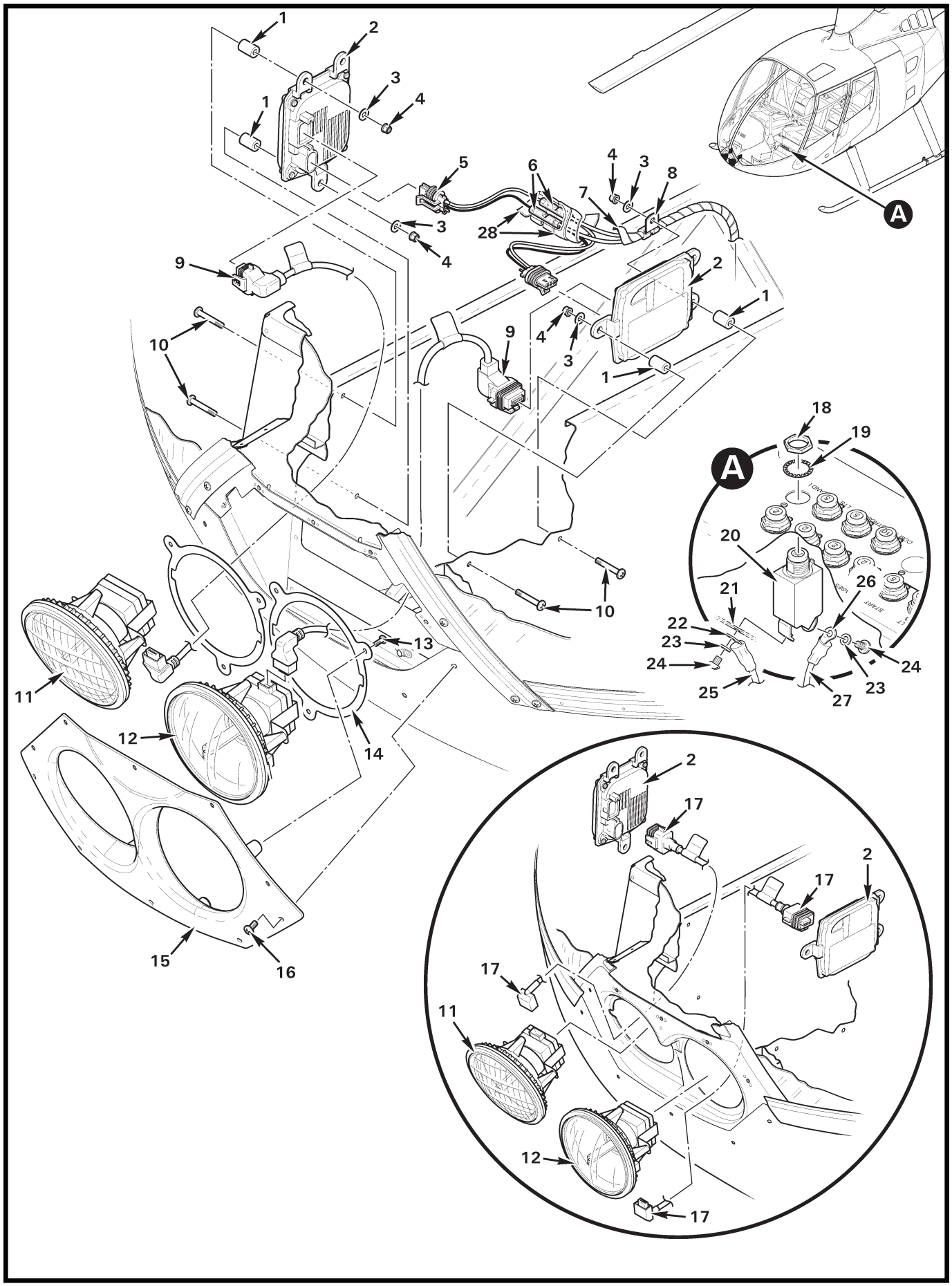
1
2
3
4
1
5
6
4
3
8
7
A
3
28
4
9
2
1
10
9
4
3
1
18
19
A
20
26
21
22
23
24
24
23
25
27
10
13
11
12
14
15
16
2
17
2
17
17
11
12
17

FIGURE AND INDEX NUMBER	PART NUMBER	DESCRIPTION	PARTS AVAIL	QTY PER ASSY
		HID LANDING LIGHTS INSTALLATION		
33-7-1	A130-38	Spacer	X	4
2	B557-3	Ballast (28-volt; includes item 5)	X	2
3	NAS1149FN832P	Washer	X	4
4	MS21042L08	Nut	X	4
5	B557-7	Power Cord (connector and wires)	O	2
6	B261-3	Splice	X	2
7	B161-2	Spirap	X	A/R
8	MS21919WDG4	Clamp	X	1
9	B557-8	Cable (90° X 90°)	X	2
10	MS27039C0816	Screw	X	4
11	B557-2	Lamp – RH (HID, taxi)	X	1
12	B557-1	Lamp – LH (HID, landing)	X	1
13	MS35206-228	Screw	X	6
14	C526-3	Retainer	X	2
15	C526-2	Bezel	X	1
	B270-13	Sealant (along three top edges only)	X	A/R
	C526-1	Retainer (earlier aircraft, not shown)	X	1
16	AN526C832R8	Screw (Ref)		
17	B557-4	Cable (90° X Straight, earlier ships)	X	2
18	—	Nut	O	1
19	—	Washer	O	1
20	B297-7	Circuit Breaker (7.5 amp; includes items 18, 19, 23, and 24)	X	1
21	A448-4	Bus Bar (Ref)		
22	B260-11	Terminal (Ref)		
23	—	Washer	O	2
24	—	Screw	O	2
25	-102	Wire (Ref)		
26	B260-2	Terminal	X	1
27	-103	Wire (Ref; landing light relay)		
28	B161-4	Spirap	X	A/R

NOTES

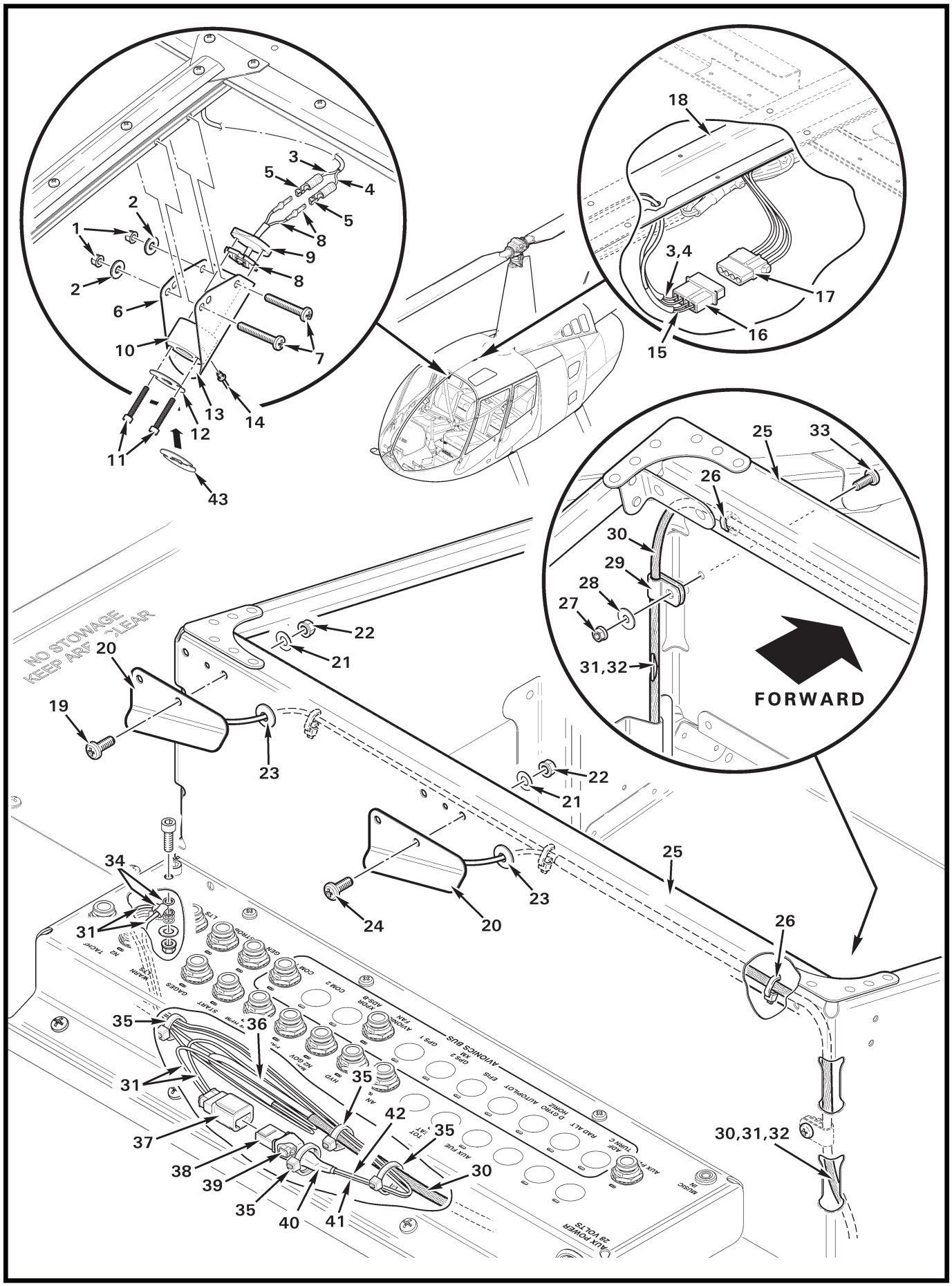
1
2
2
3
4
5
5
6
7
8
8
9
10
11
12
13
14
43
15
16
17
18
3,4
19
20
20
21
21
22
22
23
23
24
25
25
26
26
27
28
29
30
30,31,32
31
31
31,32
33
34
35
35
35
35
36
37
38
39
40
41
42
NO STOWAGE
KEEP ARE CLEAR
FORWARD
AVIONICS BUS
AUX POWER
28 VOLTS

FIGURE AND INDEX NUMBER	PART NUMBER	DESCRIPTION	PARTS AVAIL	QTY PER ASSY
		CABIN INTERIOR LIGHTING INSTALLATION		
33-9-1	NAS1291C08M	Nut	X	2
2	NAS1149DN816J	Washer	X	2
3	F090-2289	Wire (Ref)		
4	F090-2290	Wire (Ref)		
5	B262-1	Terminal	X	2
6	G196-8	Light Assembly – Console (Includes items 8 thru 14. For ENG ships also order item 43 when replacing.)	X	1
7	MS35214-47	Screw	X	2
8	G196-2	LED Assembly	X	1
9	G197-5	Cover	X	1
10	G197-10	Housing	X	1
11	91251A113	Screw	X	2
12	G197-9	Window	X	1
13	G197-11	Bracket	X	1
14	NAS9301B-4-02	Rivet	X	1
15	F090-125	Wire (Ref, compass light)		
	F090-126	Wire (Ref, compass light)		
16	B263-16	Housing	X	1
	B263-1	Pin	X	4
17	B263-17	Housing	X	1
	B263-2	Socket	X	4
18	F087-3	Support – Roof (Ref)		
19	MS27039C0806	Screw	X	2
20	G196-7	Light Assembly – Circuit Breaker Panel (Incl items 23, 31,32, and 34)	X	2
21	NAS1149FN816P	Washer	X	4
22	MS21042L08	Nut	X	4
23	MS35489-4	Grommet	X	2
24	MS27039C0805	Screw	X	2
25	F297-1	Support – Seat (Ref; forward, LH)		
26	MS3367-4-0	Ty-Rap	X	4
27	MS21042L06	Nut	X	1
28	NAS1149FN616P	Washer	X	1
29	N-3-BK	Clamp	X	1
30	B266-4	Sleeving	X	A/R

NOTES

Continues

FIGURE AND INDEX NUMBER	PART NUMBER	DESCRIPTION	PARTS AVAIL	QTY PER ASSY
		CABIN INTERIOR LIGHTING INSTALLATION (Cont'd)		
33-9-31	G196-2291	Wire (Ref; ground)		
32	G196-127	Wire (Ref; power)		
33	MS35206-228	Screw	X	1
34	B260-3	Terminal	X	1
35	MS3367-4-9	Ty-Rap	X	A/R
36	B158-2	Heat Shrink	X	A/R
37	D269-1	Plug	X	1
38	D269-2	Receptacle	X	1
39	D269-21	Backshell	X	1
40	B158-6	Heat Shrink	X	A/R
41	F859-127	Wire (Ref; power)		
42	F859-2328	Wire (Ref; power)		
43	G197-13	Window (ENG ships)	X	1

NOTES

Intentionally Blank

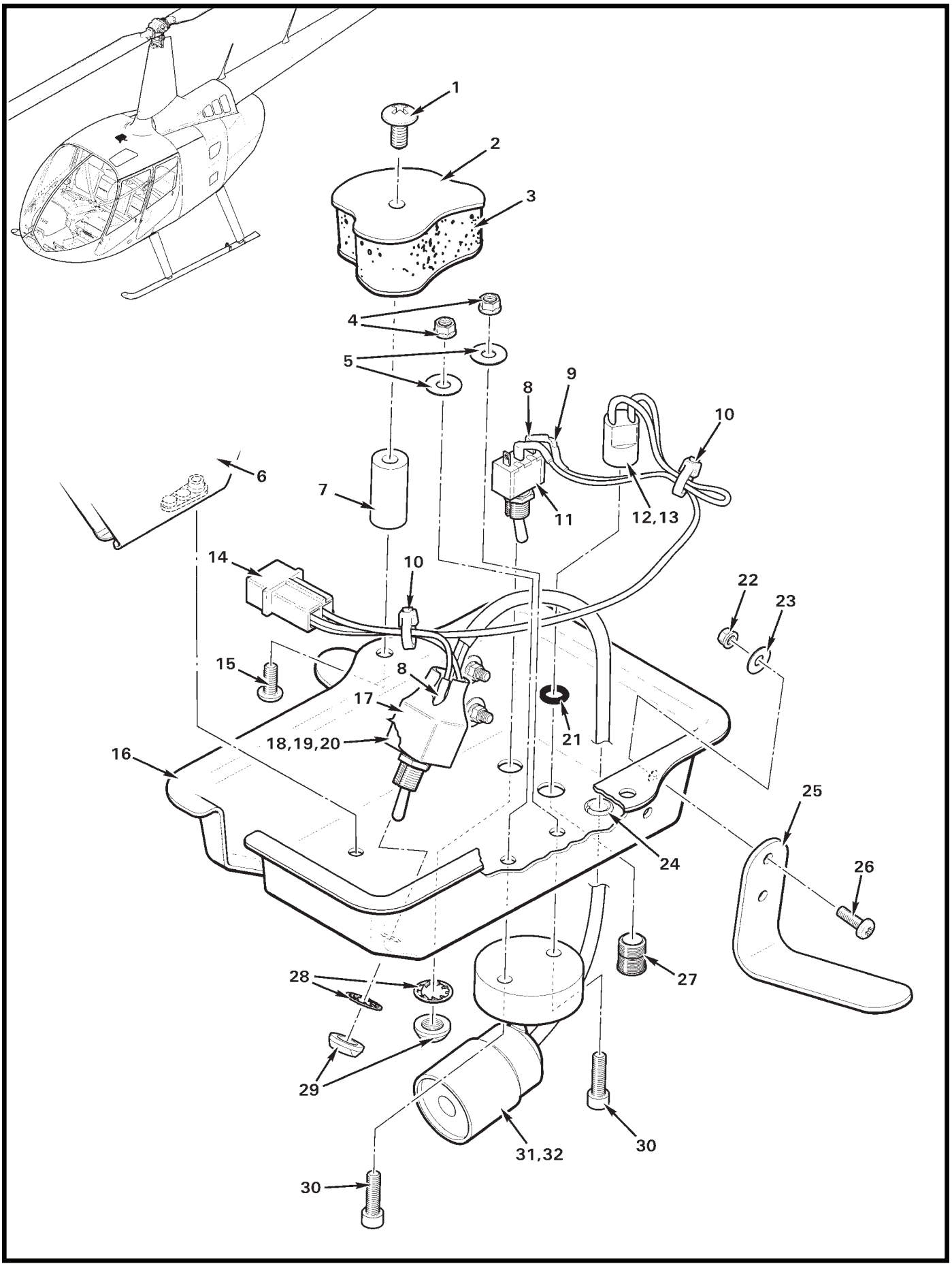
1
2
3
4
5
6
7
8
9
10
11
12,13
14
10
15
8
17
18,19,20
16
21
22
23
24
25
26
27
28
29
30
31,32
30

FIGURE AND INDEX NUMBER	PART NUMBER	DESCRIPTION	PARTS AVAIL	QTY PER ASSY
		SPOTLIGHT INSTALLATION*		
33-13-1	AN526C832R6	Screw	X	2
2	F273-1	Roof (Ref)		
3	F003	Insulation – Fwd (RH, Ref)		
4	MS21042L06	Nut	X	2
5	NAS1149FN616P	Washer	X	2
6	D118-1*	Bracket Assembly (Ref)		
7	C710-3	Spacer	X	2
8	B158-2	Heat Shrink (around leads)	X	A/R
9	B0207C1K210F5T	Resistor	X	1
10	MS3367-4-9	Ty-Rap	X	2
11	B300-1	Switch Assembly (Incl items 28 and 29)	X	1
12	CNX310000X4112	Connector	X	1
13	E1003	LED (not shown)	X	1
14	B263-12	Housing	X	1
	B263-1	Pin	X	2
15	MS27039C0806	Screw	X	2
16	C712-2	Cover	X	1
17	B158-12	Heat Shrink	X	A/R
18	B0207C1K650F5T	Resistor (not shown)	X	1
19	B0207C3K400F5T	Resistor (not shown)	X	1
20	B300-5	Switch Assembly (Incl items 28 and 29)	X	1
21	A215-008	O-Ring	X	1
22	MS21042L04	Nut	X	4
23	NAS1149FN416P	Washer	X	4
24	NAS557-3A	Grommet	X	1
25	A752-1	Angle	X	2
26	MS35206-215	Screw	X	4
27	CMC321-CTP	Lens	X	1
28	B227-3	Lockwasher	X	2
29	B227-4	Dress Nut	X	2
30	NAS1352-06-8	Screw	X	2
31	D606-1	Spotlight	X	1
32	C039-3**	Cover Assembly – Spotlight	X	1

NOTES * For non-air conditioned ships. For air-conditioned ships, see Figure 21-21.

** Assembly includes items 4, 5, 8 thru 14, and 16 thru 31.

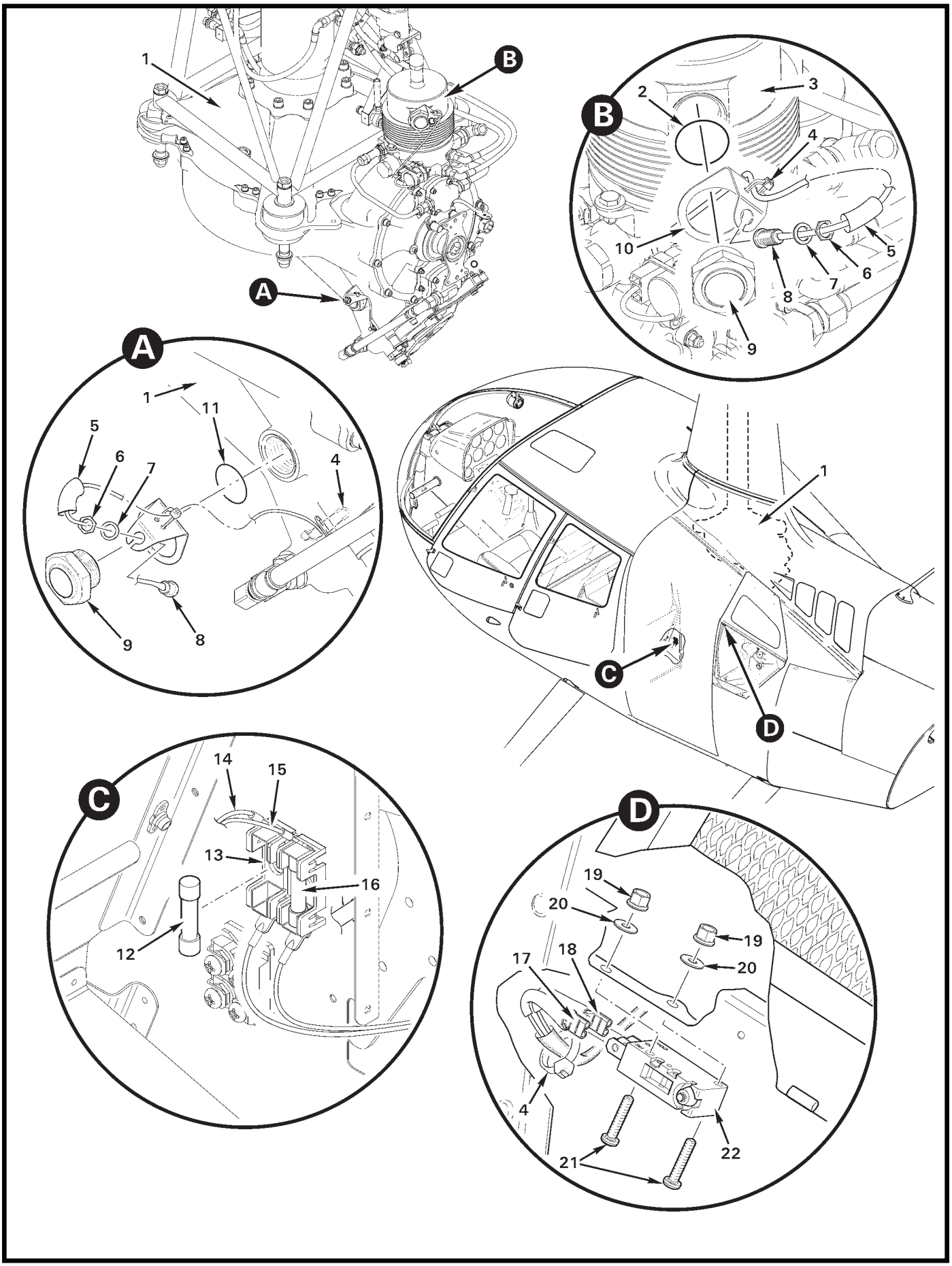

FIGURE 33-15 MRGB LED LIGHT SYSTEM

FIGURE AND INDEX NUMBER	PART NUMBER	DESCRIPTION	PARTS AVAIL	QTY PER ASSY
		MRGB LED LIGHT SYSTEM		
33-15-1	F006-1	Main Rotor Gearbox Assembly (Ref; see Figure 63-3)		
2	MS28775-020	Packing (o-ring)	X	1
3	D211-3	Hydraulic System Reservoir Assembly (Ref)		
4	MS3367-4-9	Ty-Rap	X	A/R
5	B158-6	Heat Shrink	X	A/R
6	—	Nut (Ref)		
7	—	Washer (Ref)		
8	F049-01	Harness Assembly (Ref; includes items 5 thru 7)		
9	B563-2	Sight Gage	X	2
10	D494-2	Holder	X	1
11	A215-020	O-ring	X	1
12	AGC-1-R	Fuse (1 amp)	X	1
13	B304-12	Diode Assembly (includes items 12 and 16; see also Figure 96-5)	X	1
14	-2322	Wire (Ref)		
15	-66	Wire (Ref)		
16	AGC-3-R	Fuse (Ref; 3 amp)		
17	-2220	Wire (Ref; NC)		
18	-2322	Wire (Ref; Com)		
19	MS21042L04	Nut	X	2
20	NAS1149FN416P	Washer	X	2
21	MS35206-218	Screw	X	2
22	D2VW-5L3-1HS	Switch	X	1

NOTES

Intentionally Blank

CHAPTER 52

DOORS AND WINDOWS

Figure	*Title*	*Page*
52-1	Forward Door Assembly	52.0
52-5	Forward Door Installation	52.4
52-7	Aft Door Assembly	52.6
52-11	Aft Door Installation	52.10
52-13	Baggage Door Installation	52.12
52-17	Windshield Installation – Standard (Acrylic)	52.16
52-21	Windshield Installation – Impact Resistant (Polycarbonate)	52.20
52-25	Windshield Installation – Impact Resistant (Polycarbonate)	52.24
52-27	Windshield Installation – Impact Resistant (Polycarbonate) with Wire Strike Provisions	52.26

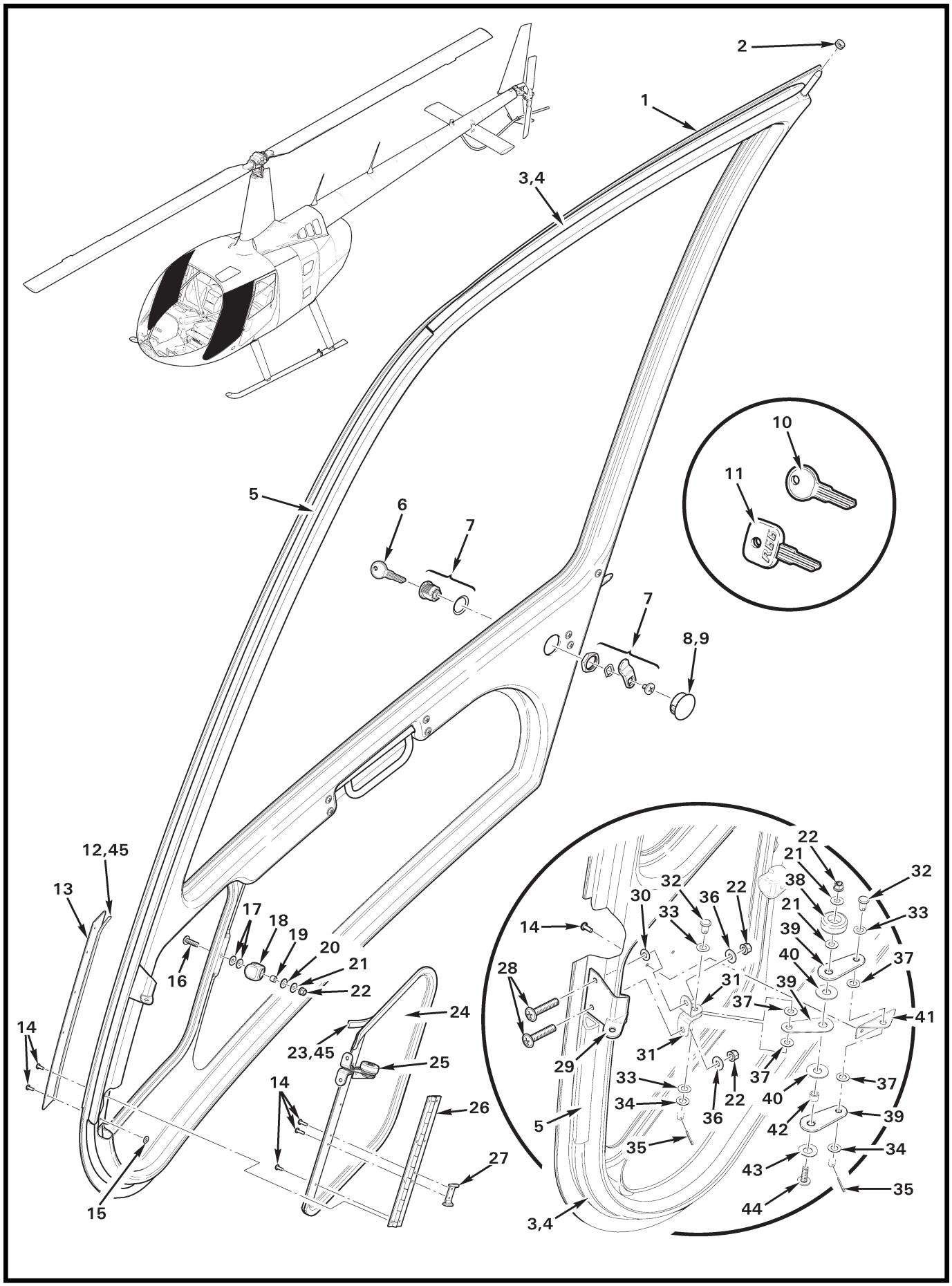
2
1
3,4
10
11
5
6
7
7
8,9
12,45
13
17
18
19
20
21
22
16
14
24
23,45
25
14
26
27
15
22
21
38
32
32
30
36
22
33
33
14
21
39
40
37
28
31
39
37
41
31
29
37
33
22
37
34
36
40
39
5
42
35
34
43
35
44
3,4

FIGURE AND INDEX NUMBER	PART NUMBER	DESCRIPTION	PARTS AVAIL	QTY PER ASSY
		FORWARD DOOR ASSEMBLY		
52-1-1	C026-016	Door Assembly (RH, clear; Incl items 2 thru 30, and 36)	X	1
	C026-015	Door Assembly (LH, clear [not shown]; Incl items 2 thru 28, 34, and 43)	X	1
	C026-026	Door Assembly (RH, tinted; Incl items 2 thru 28, 34, and 43)	X	1
	C026-025	Door Assembly (LH, tinted [not shown]; Incl items 2 thru 28, 34, and 43)	X	1
	C026-036	Door Assembly (RH, bubble, clear; Incl items 2 thru 28, 34, and 43)	X	1
	C026-035	Door Assembly (LH, bubble, clear [not shown]; Incl items 2 thru 28, 34, and 43)	X	1
	C026-046	Door Assembly (RH, bubble, tinted; Incl items 2 thru 28, 34, and 43)	X	1
	C026-045	Door Assembly (LH, bubble, tinted [not shown]; Incl items 2 thru 28, 34, and 43)	X	1
	C026-006	Door Assembly (RH, large bubble, clear; Incl items 2 thru 30, and 36)	X	1
	C026-005	Door Assembly (LH, large bubble, clear [not shown]; Incl items 2 thru 28, 34, and 43)	X	1
2	NAS557-4B	Grommet	X	1
3	A226-2	Seal (install using item 4)	X	A/R
4	B270-18	Adhesive	X	A/R
5	A226-6	Seal (forward door edge, self adhesive)	X	A/R
6	D768-8	Key (metal)	X	1
7	A556-3	Lock (RH or LH)	X	1
	D768-7	Lock Set (Ref; [3] A556-3 locks, [2] D768-8 keys, and [1] F661-2 switch)		
8	2713	Hole Plug	X	1
9	B270-9	Adhesive	X	A/R
10	R8096	Key – Duplicate (specify ship S/N and “PK” numbers when ordering)	X	1
11	R8428	Key – Blank (black plastic-coated “R66” logo)	X	1
12	A226-3	Seal (install using item 45)	X	A/R
13	C682-3	Barrier	X	1
14	MS20470AD3	Rivet	X	13
15	NAS1149FN232P	Washer	X	2
16	AN525-832R10	Screw	X	1
17	NAS1149FN816P	Washer (or NAS1149FN832P as required for shimming this location)	X	A/R

NOTES

Continues

FIGURE AND INDEX NUMBER	PART NUMBER	DESCRIPTION	PARTS AVAIL	QTY PER ASSY
		FORWARD DOOR ASSEMBLY (Cont'd)		
52-1-18	C285-1	Knob	X	1
19	C130-5	Spacer	X	1
20	U216-0100-S	Spring Washer	X	1
21	NAS1149FN816P	Washer	X	3
22	MS21042L08	Nut	X	4
23	A226-7	Seal (install using item 45)	X	A/R
24	C425-10	Door – Vent (RH)	X	1
	C425-9	Door – Vent (LH, not shown)	X	1
25	A425-17	Arm Assembly (Incl items 21, 22, 31 thru 35, and 37 thru 44)	X	1
26	C425-5	Hinge	X	1
27	B242-2	Stop	X	1
28	AN525-832R16	Screw	X	2
29	D574-12	Bracket Weldment (RH)	X	1
	D574-11	Bracket Weldment (LH, not shown)	X	1
30	A141-19	Washer	X	1
31	A425-19	Clip	X	2
32	MS20392-2C7	Pin	X	2
33	U190-0090S	Spring Washer	X	3
34	NAS1149F0332P	Washer	X	2
35	MS24665-132	Cotter Pin	X	2
36	NAS1149FN832P	Washer	X	2
37	A141-8	Washer	X	4
38	A431-1	Knob	X	1
39	A425-7	Arm	X	3
40	A141-7	Washer	X	2
41	A425-13	Angle	X	1
42	A105-7	Journal	X	1
43	U250-0185	Spring Washer	X	1
44	AN525-832R8	Screw	X	1
45	B270-8qt	Adhesive	X	A/R

NOTES

Intentionally Blank

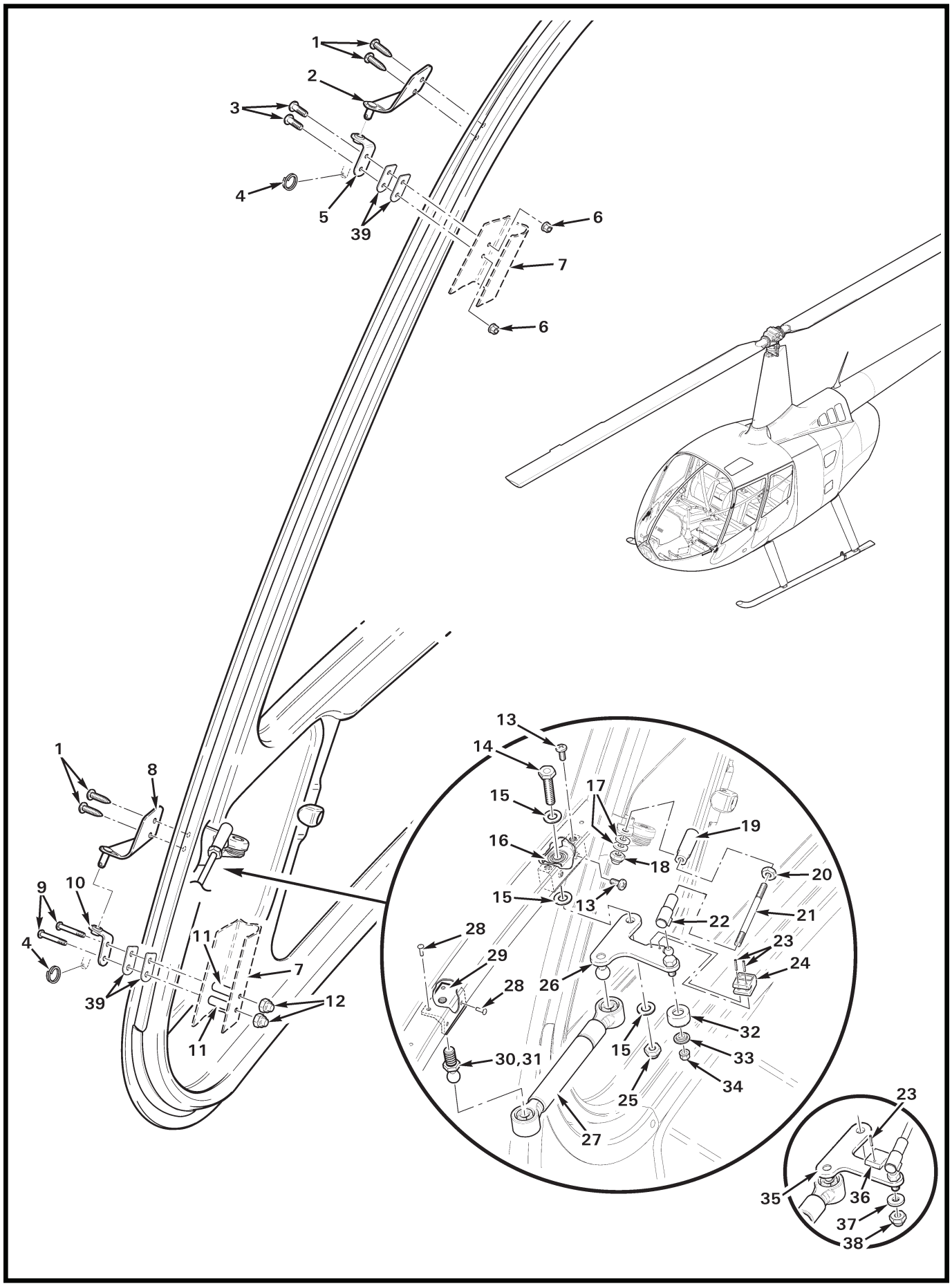
1
2
3
4
5
39
6
7
6
1
8
9
10
4
39
11
7
12
11
13
14
15
17
16
19
18
20
15
13
22
21
28
23
29
24
28
26
32
15
33
30,31
34
25
27
23
35
36
37
38

FIGURE AND INDEX NUMBER	PART NUMBER	DESCRIPTION	PARTS AVAIL	QTY PER ASSY
		FORWARD DOOR INSTALLATION		
52-5-1	MS51861-37C	Screw	X	4
2	F227-4	Hinge Assembly (RH)	X	1
	F227-3	Hinge Assembly (LH, not shown)	X	1
3	MS27039C0807	Screw (if [0 to 1] of item 39 is installed)	X	4
	MS27039C0808	Screw (if [2 to 3] of item 39 is installed)	X	4
	MS27039C0809	Screw (if [4] of item 39 is installed)	X	4
4	B427-1	Ring	X	2
5	C228-4	Hinge Assembly	X	1
6	MS21042L08	Nut	X	4
7	C238	Jamb (Ref)		
8	F227-2	Hinge Assembly (RH)	X	1
	F227-1	Hinge Assembly (LH, not shown)	X	1
9	MS27039C0824	Screw (if [0 to 1] of item 39 is installed)	X	4
	MS27039C0825	Screw (if [2 to 3] of item 39 is installed)	X	4
	MS27039C0826	Screw (if [4] of item 39 is installed)	X	4
10	C228-2	Hinge Assembly	X	2
11	C130-37	Spacer	X	4
12	B340-4	Nut	X	4
13	MS27039C0806	Screw	X	4
14	NAS6604-12	Bolt	X	1
15	NAS1149F0432P	Washer	X	3
16	D573-1	Block Assembly	X	1
17	NAS1149F0363P	Washer	X	3
18	B340-8	Nut	X	2
19	D575-3	Ball Joint	X	1
20	AN315-3R	Nut	X	1
21	D573-4	Rod	X	1
22	D575-2	Ball Joint	X	1
23	MS16562-4	Spring Pin (one pin on item 36)	X	2
24	D573-7	Bumper	X	1
25	B340-10	Nut	X	1
26	D574-10*	Arm Assembly (RH, includes items 23 and 24)	X	1
	D574-9*	Arm Assembly (LH, not shown; includes items 23 and 24)	X	1
27	D575-1	Gas Spring	X	1
28	MS20470AD4	Rivet	X	4

NOTES * Revision F and prior have one bumper hole, Revision G and subsequent have two bumper holes.

Continues

FIGURE AND INDEX NUMBER	PART NUMBER	DESCRIPTION	PARTS AVAIL	QTY PER ASSY
		FORWARD DOOR INSTALLATION (Cont'd)		
52-5-29	D573-3	Block	X	1
30	C394-2	Ball Stud (install using item 31)	X	1
31	B270-10	Adhesive	X	A/R
32	C119-3	Bumper	X	1
33	B138-2	Spacer	X	1
34	D210-3	Nut	X	1
35	D574-9/-10*	Arm Assembly (Ref, revision F and prior. To replace, order item 26.)		
36	D573-6	Bumper (Ref, earlier ships; no longer available.)		
37	NAS1149F0363P	Washer	X	1
38	B340-8	Nut	X	1
39	C228-7	Shim (install 1 to 4 shims to prevent preloading on doors, [all hinge locations])	X	A/R

NOTES * Revision F and prior have one bumper hole, Revision G and subsequent have two bumper holes.

Intentionally Blank

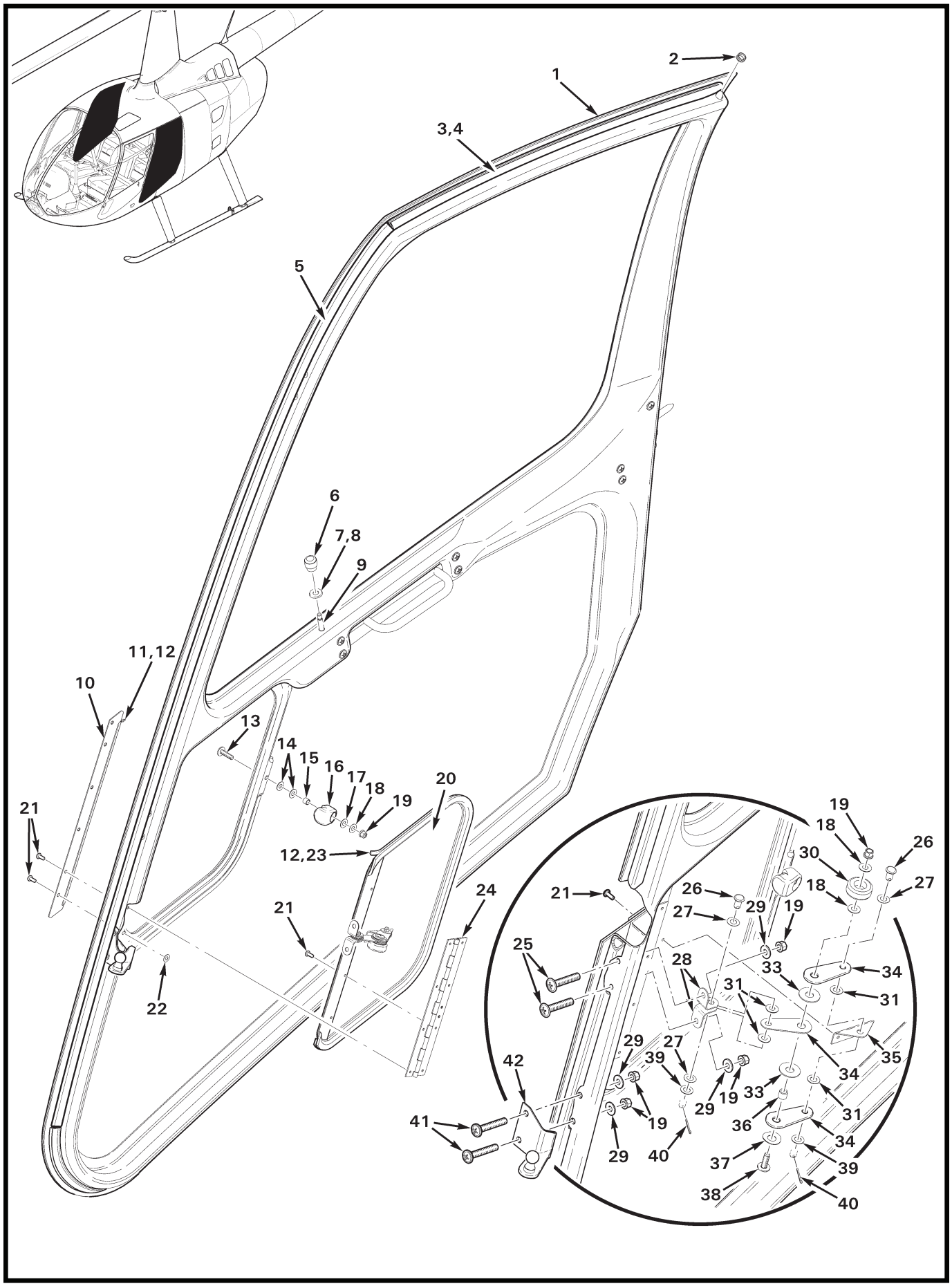
1
2
3,4
5
6
7,8
9
10
11,12
13
14
15
16
17
18
19
20
21
22
12,23
24
25
26
27
28
29
30
31
33
34
35
36
37
38
39
40
41
42

FIGURE AND INDEX NUMBER	PART NUMBER	DESCRIPTION	PARTS AVAIL	QTY PER ASSY
		AFT DOOR ASSEMBLY		
52-7-1	C026-018	Door Assembly (RH, clear; Incl items 2 thru 25, 29, 32, 41, and 42)	X	1
	C026-017	Door Assembly (LH, clear [not shown]; Incl items 2 thru 25, 29, 32, 41, and 42)	X	1
	C026-028	Door Assembly (RH, tinted; Incl items 2 thru 25, 29, 32, 41, and 42)	X	1
	C026-027	Door Assembly (LH, tinted [not shown]; Incl items 2 thru 25, 29, 32, 41, and 42)	X	1
	C026-038	Door Assembly (RH, bubble, clear; Incl items 2 thru 25, 29, 32, 41, and 42)	X	1
	C026-037	Door Assembly (LH, bubble, clear [not shown]; Incl items 2 thru 25, 29, 32, 41, and 42)	X	1
	C026-048	Door Assembly (RH, bubble, tinted; Incl items 2 thru 25, 29, 32, 41, and 42)	X	1
	C026-047	Door Assembly (LH, bubble, tinted [not shown]; Incl items 2 thru 25, 29, 32, 41, and 42)	X	1
2	NAS557-4B	Grommet	X	1
3	A226-2	Seal (install using item 4)	X	A/R
4	B270-18	Adhesive	X	A/R
5	A226-6	Seal (forward door edge, self adhesive)	X	A/R
6	A431-2	Knob	X	1
7	C26005	Washer (install using item 8)	X	1
8	B270-9	Adhesive	X	A/R
9	C544-1	Pin (Ref)		
10	C682-2	Barrier	X	1
11	A226-3	Seal (install using item 12)	X	A/R
12	B270-8qt	Adhesive	X	A/R
13	AN525-832R10	Screw	X	1
14	NAS1149FN816P	Washer (or NAS1149FN832P for shimming)	X	A/R
15	C130-5	Spacer	X	1
16	C285-1	Knob	X	1
17	U216-0100-S	Spring Washer	X	1
18	NAS1149FN816P	Washer	X	3
19	MS21042L08	Nut	X	3
20	C425-12	Door – Vent (RH)	X	1
	C425-11	Door – Vent (LH, not shown)	X	1
21	MS20470AD3	Rivet	X	12

NOTES

Continues

FIGURE AND INDEX NUMBER	PART NUMBER	DESCRIPTION	PARTS AVAIL	QTY PER ASSY
		AFT DOOR ASSEMBLY (Cont'd)		
52-7-22	NAS1149FN232P	Washer	X	2
23	A226-7	Seal (install using item 12)	X	A/R
24	C425-5	Hinge	X	1
25	MS24694-S11	Screw	X	2
26	MS20392-2C7	Pin	X	2
27	U190-0090S	Spring Washer	X	3
28	A425-19	Clip	X	2
29	NAS1149FN832P	Washer	X	4
30	A431-1	Knob	X	1
31	A141-8	Washer	X	4
32	A425-17	Arm Assembly (Incl items 18, 19, 26 thru 28, 30, 31, and 33 thru 40)	X	1
33	A141-7	Washer	X	2
34	A425-7	Arm	X	3
35	A425-13	Angle	X	1
36	A105-7	Journal	X	1
37	U250-0185	Spring Washer	X	1
38	AN525-832R8	Screw	X	1
39	NAS1149F0332P	Washer	X	2
40	MS24665-132	Cotter Pin	X	2
41	AN525-832R16	Screw	X	2
42	C393-2	Bracket (RH door)	X	1
	C393-1	Bracket (LH door; not shown)	X	1

NOTES

Intentionally Blank

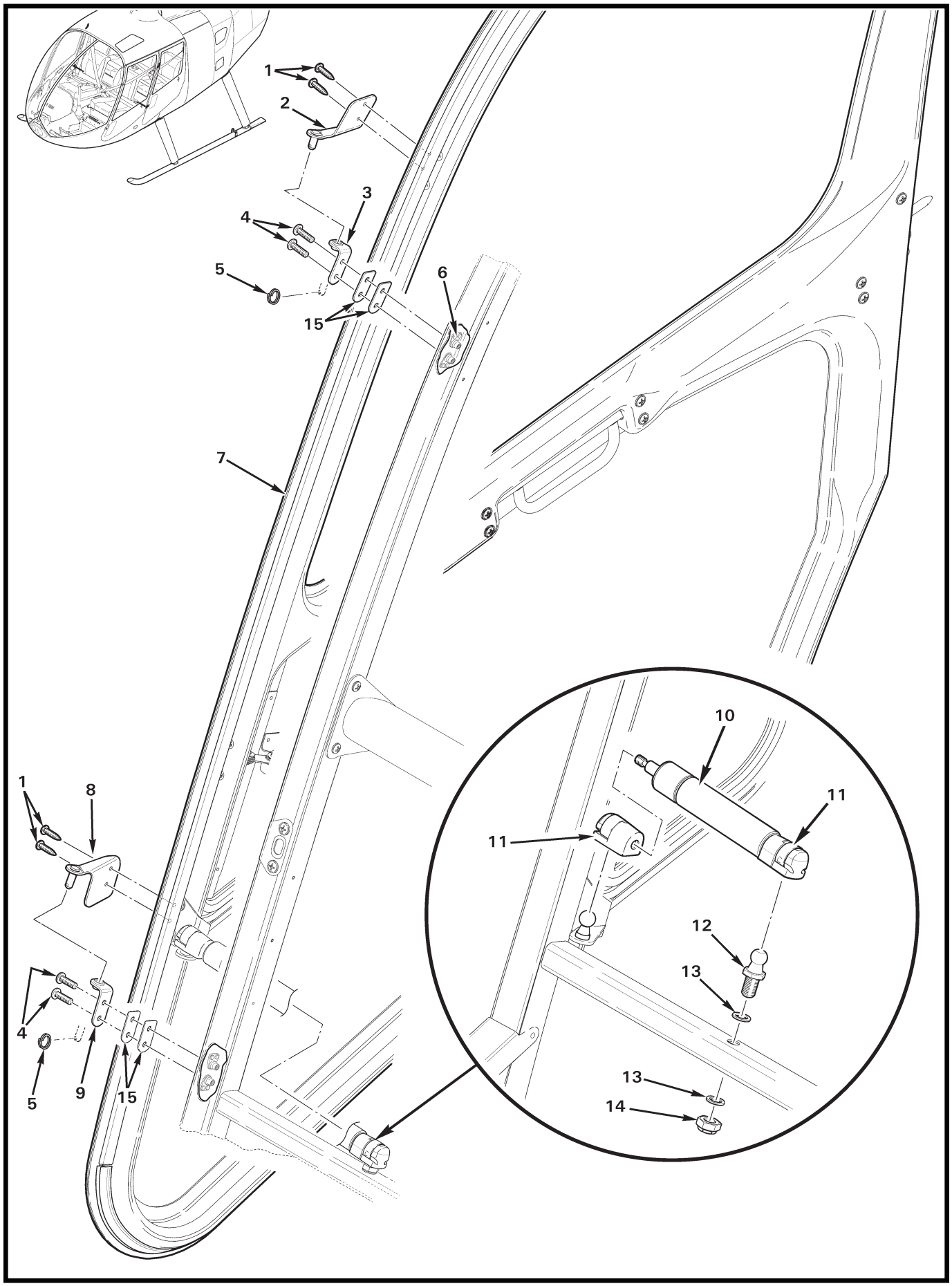
1
2
3
4
5
6
15
7
1
8
4
5
9
15
10
11
11
12
13
13
14

FIGURE AND INDEX NUMBER	PART NUMBER	DESCRIPTION	PARTS AVAIL	QTY PER ASSY
		AFT DOOR INSTALLATION		
52-11-1	MS51861-37C	Screw	X	4
2	C389-4	Hinge Assembly (RH, upper)	X	1
	C389-3	Hinge Assembly (LH, upper; not shown)	X	1
3	A228-1	Hinge (upper)	X	1
4	MS27039C0809	Screw (if [0 to 1] of item 15 is installed)	X	4
	MS27039C0810	Screw (if [2 to 3] of item 15 is installed)	X	4
	MS27039C0811	Screw (if [4] of item 15 is installed)	X	4
5	B427-1	Ring	X	2
6	MS21086L08	Nutplate (Ref)		
7	C026	Aft Door Assembly (Ref)		
8	C389-10	Hinge Assembly (RH, lower)	X	1
	C389-9	Hinge Assembly (LH, lower; not shown)	X	1
9	A228-2	Hinge (lower)	X	1
10	C394-1	Gas Spring (Incl item 11)	X	1
11	PC1249-2	End Connector	X	2
12	C394-2	Ball Stud	X	1
13	C141-15	Washer	X	2
14	21FKF-518	Nut	X	1
15	C228-7	Shim (install 1 to 4 shims to prevent preloading on doors, [all hinge locations])	X	A/R

NOTES

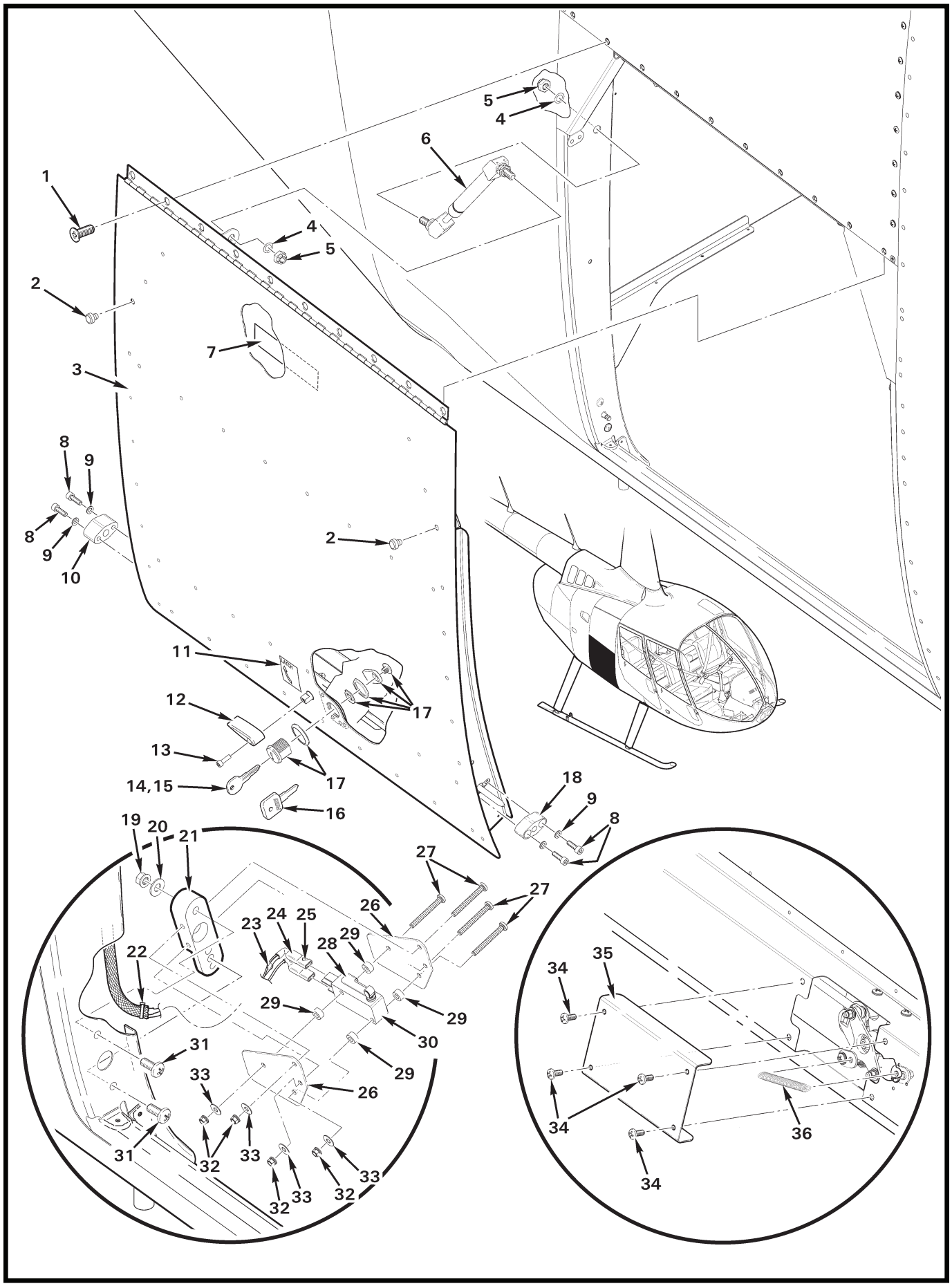
1
2
3
4
5
6
7
8
9
10
11
12
13
14,15
16
17
18
19
20
21
22
23
24
25
26
27
28
29
30
31
32
33
34
35
36

FIGURE AND INDEX NUMBER	PART NUMBER	DESCRIPTION	PARTS AVAIL	QTY PER ASSY
		BAGGAGE DOOR INSTALLATION		
52-13-1	MS24694-S4	Screw	X	12
2	G405-1	Bumper (black rubber)	X	2
3	G900-1	Door Assembly – Baggage (Incl items 8 thru 9, 12, 13, 17, 18, and 34 thru 36)	X	1
4	NAS1149F0532P	Washer	X	2
5	21FKF-518	Nut	X	2
6	G904-1	Spring Assembly	X	1
7	F654-7	Decal (baggage load limits)	X	1
8	NAS1351-3-10P	Screw	X	4
9	NAS620-10L	Washer	X	4
10	G903-3	Block	X	1
11	F654-8	Decal – “LATCH” (light color ships)	X	1
	F654-9	Decal – “LATCH” (dark color ships)	X	1
12	G902-5	Knob	X	1
13	NAS1352-08-8P	Screw	X	1
14	—	Key (metal)	O	1
15	R8096	Key – Duplicate (metal; specify ship S/N and “PK” numbers when ordering)	X	1
16	D768-4	Key (blank; black plastic-coated “R66” logo)	X	1
17	A556-1	Lock Set (set of two; includes item 14[4])	X	1
18	G903-4	Block	X	1
19	MS21042L3	Nut	X	1
20	NAS1149F0332P	Washer	X	1
21	G903-1	Block Assembly	X	1
22	MS3367-5-9	Ty-Rap	X	1
23	1N4005G	Diode	X	1
	B261-2	Splice (not shown)	X	1
	B158-103	Heat Shrink	X	A/R
24	B158-3	Heat Shrink	X	A/R
25	B262-2	Receptacle	X	2
26	G903-7	Bracket	X	2
27	MS35206-227	Screw	X	4
28	JV-5	Actuator	X	1
29	A130-14	Spacer	X	4
30	D2VW-5L3-1HS	Switch	X	1

NOTES

Continues

FIGURE AND INDEX NUMBER	PART NUMBER	DESCRIPTION	PARTS AVAIL	QTY PER ASSY
		BAGGAGE DOOR INSTALLATION (Cont'd)		
52-13-31	MS27039C1-07	Screw	X	2
32	MS21042L04	Nut	X	4
33	NAS1149FN416P	Washer	X	4
34	MS27039C0806	Screw	X	4
35	G906-2	Cover	X	1
36	B774-5	Spring	X	1
		* * *		
37	KI-207*	R66 Baggage Door Seals Kit (see R66 SL-02)	X	A/R

NOTES * See www.robinsonheli.com for kit contents and instructions.

Intentionally Blank

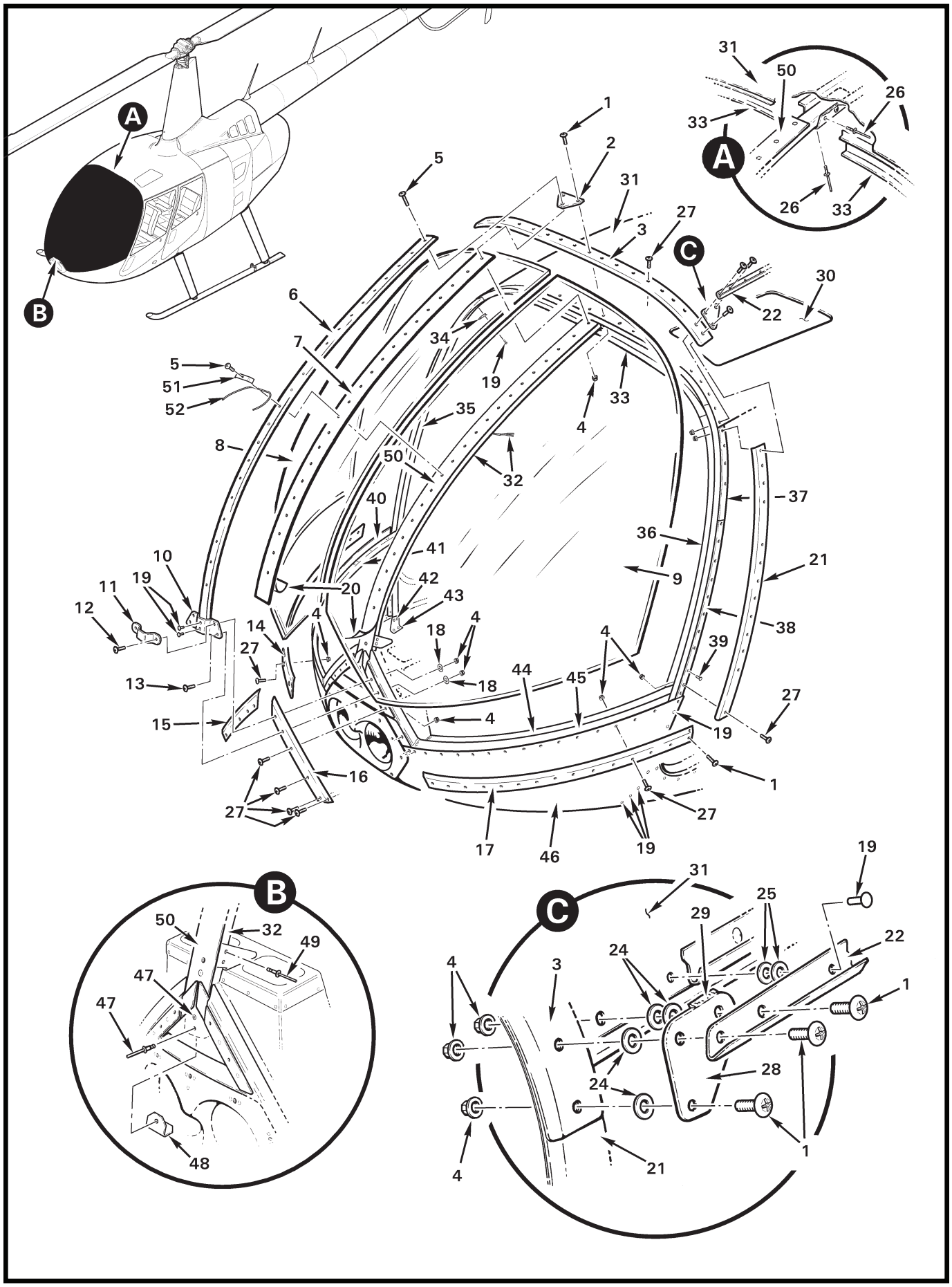
A
B
C
1
2
3
4
5
6
7
8
9
10
11
12
13
14
15
16
17
18
19
20
21
22
24
25
26
27
28
29
30
31
32
33
34
35
36
37
38
39
40
41
42
43
44
45
46
47
48
49
50
51
52

FIGURE AND INDEX NUMBER	PART NUMBER	DESCRIPTION	PARTS AVAIL	QTY PER ASSY
		WINDSHIELD INSTALLATION – STANDARD (ACRYLIC)		
52-17-1	AN526C832R9	Screw (do not substitute MS27039 screws)	X	8
2	B409-5	Gusset	X	1
3	F238-4	Retainer (apply item 29 to edges)	X	1
4	MS21042L08	Nut	X	94
5	AN526C832R12	Screw (do not substitute MS27039 screws)	X	22
6	F367-12	Stiffener	X	1
7	F367-10	Retainer	X	1
8	F274-2*	Windshield** (Acrylic; RH, clear)	X	1
	F274-4*	Windshield** (Acrylic; RH, tinted)	X	1
9	F274-1*	Windshield** (Acrylic; LH, clear)	X	1
	F274-3*	Windshield** (Acrylic; LH, tinted)	X	1
10	C366-8	Retainer	X	1
11	C366-5	Bracket	X	1
12	MS27039C0810	Screw	X	2
13	MS27039C0808	Screw	X	2
14	F367-6*	Retainer (RH)	X	1
15	F367-8*	Retainer (RH)	X	1
16	F367-7*	Retainer (LH)	X	1
17	F367-5*	Retainer (LH)	X	1
18	NAS1149FN832P	Washer	X	4
19	MS20470AD4	Rivet	X	26
20	C367-11	Tape	X	A/R
21	C238-27*	Retainer (LH)	X	1
	C238-28*	Retainer (RH; not shown)	X	1
22	F230-8	Rain Gutter (RH; apply item 29 to edges)	X	1
	F230-7	Rain Gutter (LH; apply item 29 to edges)	X	1
23	B270-13.10OZ	Sealant (10.3 oz. cartridge)	X	A/R
24	NAS1149FN832P	Washer	X	A/R
25	NAS620-5	Washer	X	A/R
26	NAS9301B-4-02	Rivet (blind)	X	5
27	AN526C832R8	Screw	X	82
28	D805-2	Restraint (LH and RH. Use item 29 to fill gap between items 22, 28, and 31.)	X	2
29	B270-1	Sealant (2-oz tube)	X	A/R
30	C273-3	Window (clear acrylic)	X	1

NOTES * Install using item 23.

** See Figure 99-7 for shipping box.

Continues

FIGURE AND INDEX NUMBER	PART NUMBER	DESCRIPTION	PARTS AVAIL	QTY PER ASSY
		WINDSHIELD INSTALLATION – STANDARD (ACRYLIC) (Cont'd)		
52-17-31	F273-1	Roof (Incl item 30)	X	1
32	F090-5	Bow Assembly (includes wires)	X	1
33	F087-2	Frame (forward; roof)	X	1
34	C211-3	Gusset (LH and RH)	X	2
35	C238-4	Door Jamb – RH (attach to cabin using items 19, 39, 42, and 43)	X	1
36	C238-3	Door Jamb – LH (attach to cabin using items 19, 39, 42, and 43)	X	1
37	C238-34	Spacer (LH and RH, 0.125 in. thick polycarbonate. Attach to items 35 and 36 using item 39.)	X	2
38	D661-1	Spacer (LH and RH, 0.125 in. thick polycarbonate. Attach to items 35 and 36 using item 39.)	X	2
39	MS20426AD3	Rivet (flush)	X	56
40	F367-2	Retainer (RH)	X	1
41	F090-2	Frame (RH; attach with item 40 to chin [item 46] using item 39)	X	1
42	MS20470AD3	Rivet (flush)	X	8
43	A414-1	Angle (LH)	X	1
	A414-2	Angle (RH; not shown)	X	1
44	F090-1	Frame (LH; attach with item 40 to chin [item 46] using item 39)	X	1
45	F367-1	Retainer (LH)	X	1
46	F272-1	Chin	X	1
47	NAS9301B-4-03	Rivet (blind)	X	2
48	C366-6	Cap	X	1
49	NAS9301B-4-02	Rivet (blind; or NAS9301B-4-03 as required)	X	4
50	F367-9	Retainer	X	1
51	B295-1	Clip (install 10th hole from bottom)	X	1
52	—	Yaw String (Ref; yarn, white acrylic, 0.10-inch dia., 3-inch length each side of clip. Source locally.)		

NOTES

Intentionally Blank

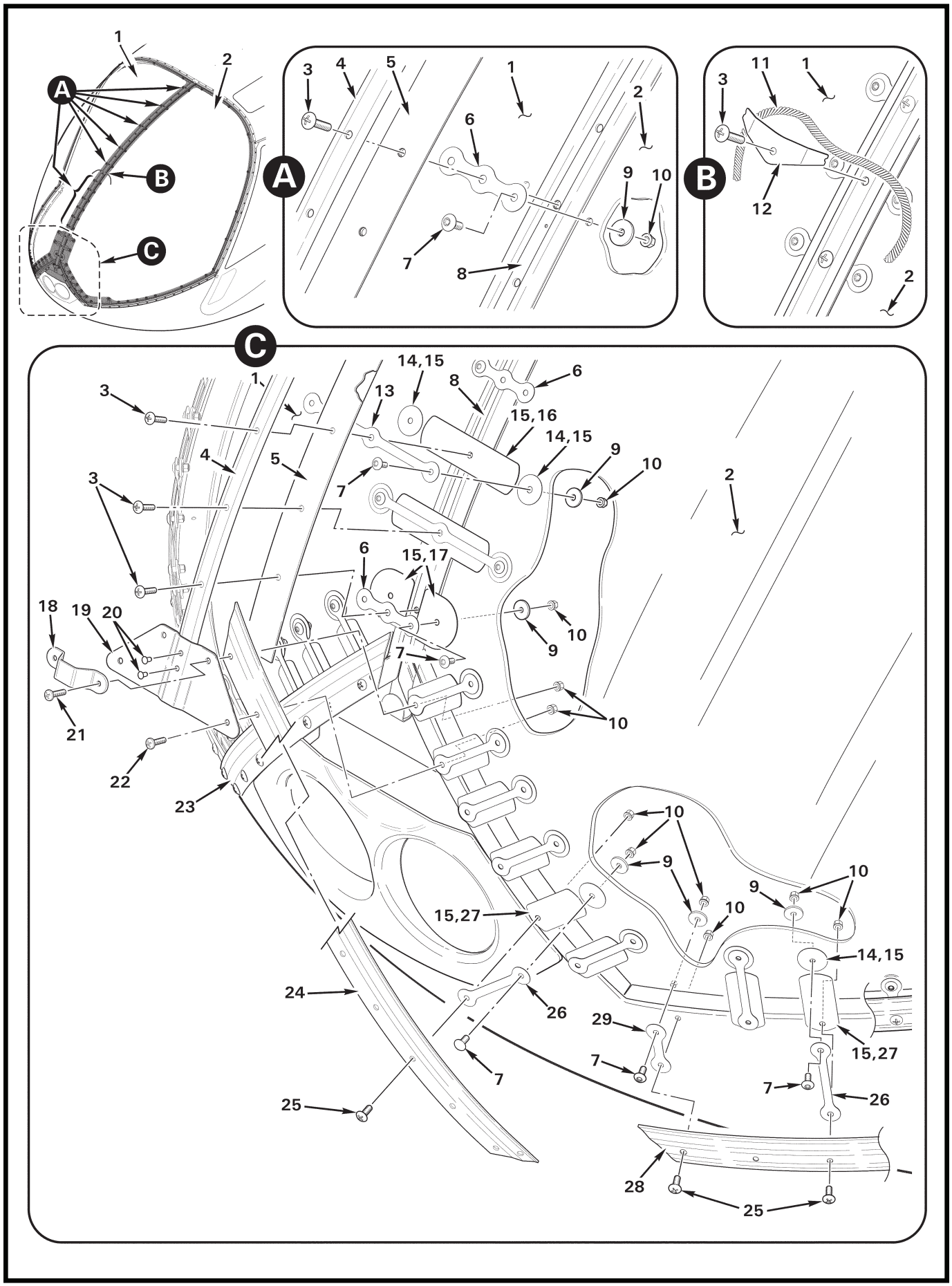
A
B
C
1
2
3
4
5
6
7
8
9
10
11
12
13
14,15
15,16
15,17
15,27
18
19
20
21
22
23
24
25
26
28
29

FIGURE AND INDEX NUMBER	PART NUMBER	DESCRIPTION	PARTS AVAIL	QTY PER ASSY
		WINDSHIELD INSTALLATION – IMPACT-RESISTANT (POLYCARBONATE)		
52-21-1	F274-6*	Windshield** (Polycarbonate; RH, clear. Also order item 30, as required.)	X	1
	F274-8*	Windshield** (Polycarbonate; RH, tinted. Also order item 30, as required.)	X	1
2	F274-5*	Windshield** (Polycarbonate; LH, clear. Also order item 30, as required.)	X	1
	F274-7*	Windshield** (Polycarbonate; LH, tinted. Also order item 30, as required.)	X	1
3	AN526C832R12	Screw (do not substitute MS27039 screws)	X	23
4	F467-12***	Stiffener (Ref)		
5	F367-10***	Retainer (Ref)		
6	G367-2	Tie	X	12
7	B526-6	Screw (do not substitute MS27039 screws)	X	74
8	F367-9***	Retainer (Ref)		
9	C141-25	Washer	X	74
10	MS21042L08	Nut	X	74
11	—	Yaw String (Ref; yarn, white acrylic, source locally. 0.10-inch dia., 3-inch length each side of clip.)		
12	B295-2	Clip (install 10th screw from bottom)	X	1
13	G367-11	Tie	X	2
14	G367-15*	Pad	X	20
15	B270-26	Sealant	X	A/R
16	G367-13*	Tab	X	2
17	G367-14*	Pad	X	2
18	C366-5***	Bracket (Ref)		
19	C366-8***	Retainer (Ref)		
20	MS20470AD4***	Rivet (Ref)		
21	MS27039C0810***	Screw (Ref)		
22	MS27039C0809	Screw	X	2
23	F367-8***	Retainer (Ref)		
24	F367-7***	Retainer (Ref)		
25	AN526C832R8	Screw (Ref)		
26	G367-10	Strap	X	16
27	G367-12*	Tab	X	16
28	F367-5***	Retainer (LH, Ref)		
	F367-6***	Retainer (RH, Ref)		

NOTES
* Install using item 15.
** See Figure 99-7 for shipping box.
*** See Figure 52-17.

Continues

FIGURE AND INDEX NUMBER	PART NUMBER	DESCRIPTION	PARTS AVAIL	QTY PER ASSY
		WINDSHIELD INSTALLATION – IMPACT-RESISTANT (POLYCARBONATE; Cont'd)		
52-21-29	G367-1	Strap	X	30
30	MT084-1.CS	Paint Templates – Sheet (Apply trim paint using paint templates per R66 MM § 52-32 Part G when replacing windshield[s] or if otherwise required. One sheet accommodates layout for two RH & two LH windshields. For use with R22-series, R44-series, and R66 helicopters equipped with polycarbonate windshields.)	X	A/R

NOTES

Intentionally Blank

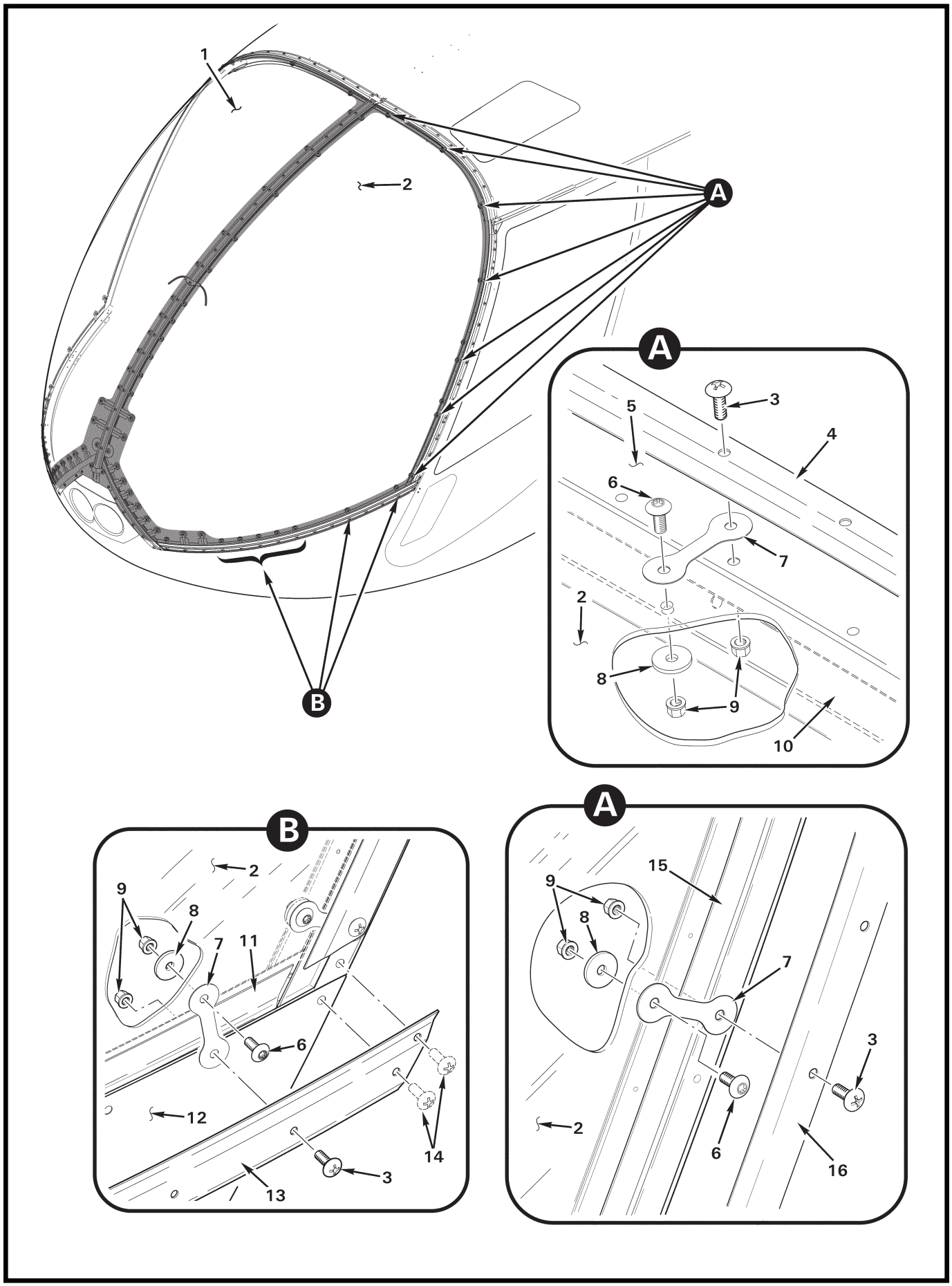

FIGURE 52-25 WINDSHIELD INSTALLATION – IMPACT-RESISTANT (POLYCARBONATE)

FIGURE AND INDEX NUMBER	PART NUMBER	DESCRIPTION	PARTS AVAIL	QTY PER ASSY
		WINDSHIELD INSTALLATION – IMPACT-RESISTANT (POLYCARBONATE)		
52-25-1	F274-6	Windshield (Ref*; Polycarbonate; RH, clear)		
	F274-8	Windshield (Ref*; Polycarbonate; RH, tinted)		
2	F274-5	Windshield (Ref*; Polycarbonate; LH, clear)		
	F274-7	Windshield (Ref*; Polycarbonate; LH, tinted)		
3	AN526C832R8	Screw (do not substitute MS27039 screws)	X	60
4	F238-4	Retainer (Ref**)		
5	F273-1	Roof (Ref**)		
6	B526-6	Screw (do not substitute MS27039 screws)	X	30
7	G367-1	Strap	X	30
8	C141-25	Washer	X	30
9	MS21042L08	Nut	X	60
10	F087-2	Frame (forward, roof; Ref**)		
11	F367-1	Retainer (LH, Ref**)		
	F367-2	Retainer (RH, not shown; Ref**)		
12	F272-1	Chin (Ref**)		
13	F367-5	Retainer (LH, Ref**)		
	F367-6	Retainer (LH, not shown; Ref**)		
14	AN526832R9	Screw (Ref**)		
15	C238-3	Door Jamb (LH, Ref**)		
16	C238-27	Retainer (LH, Ref**)		
	C238-28	Retainer (RH, not shown; Ref**)		

NOTES * See Figure 52-21.
** See Figure 52-17.

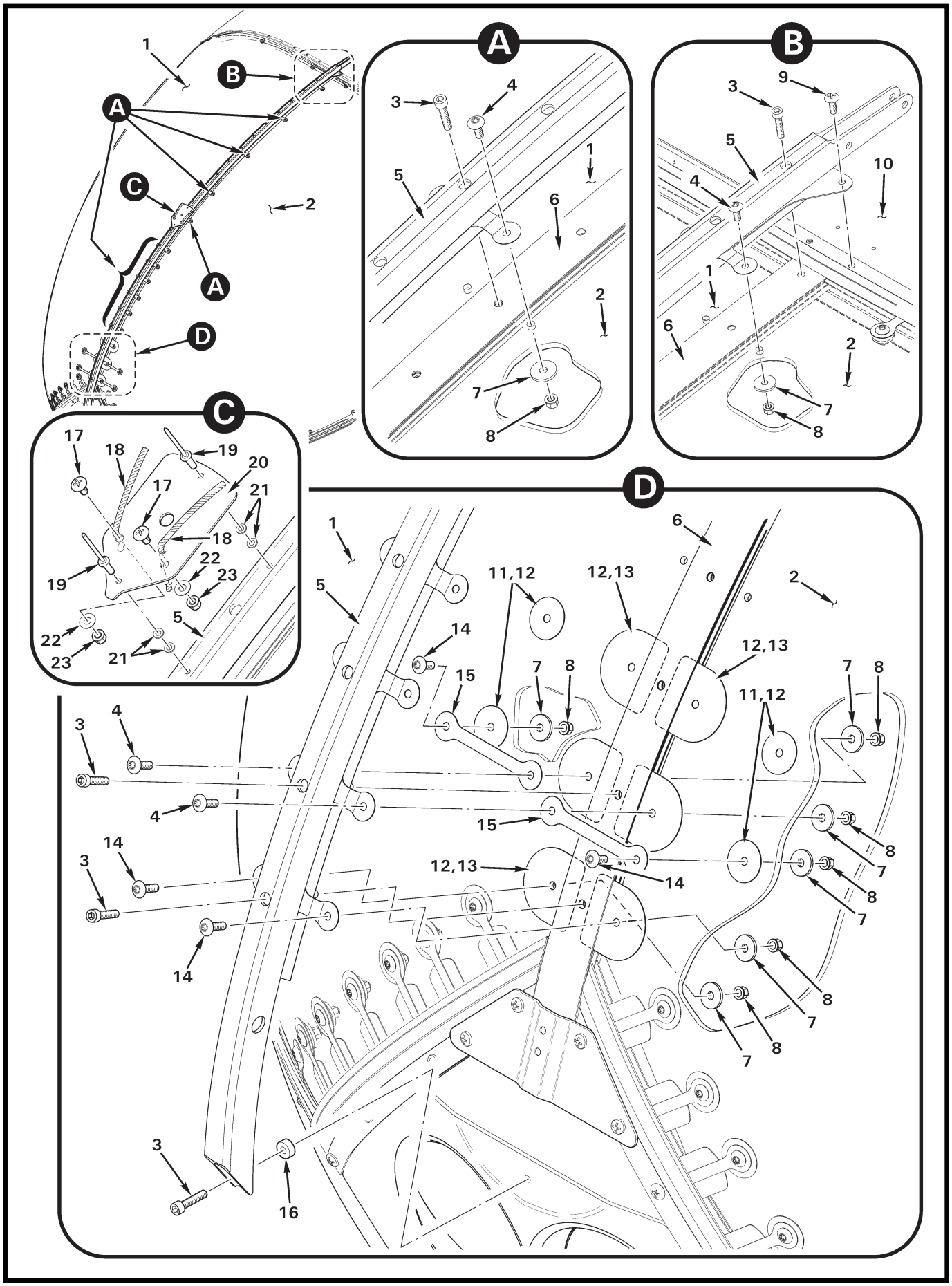

FIGURE 52-27 WINDSHIELD INSTALLATION – IMPACT-RESISTANT (POLYCARBONATE) WITH WIRE STRIKE PROVISIONS

FIGURE AND INDEX NUMBER	PART NUMBER	DESCRIPTION	PARTS AVAIL	QTY PER ASSY
		WINDSHIELD INSTALLATION – IMPACT-RESISTANT (POLYCARBONATE) WITH WIRE STRIKE PROVISIONS		
52-27-1	F274-6	Windshield (Ref*; Polycarbonate; RH, clear)		
	F274-8	Windshield (Ref*; Polycarbonate; RH, tinted)		
2	F274-5	Windshield (Ref*; Polycarbonate; LH, clear)		
	F274-7	Windshield (Ref*; Polycarbonate; LH, tinted)		
3	NAS1352-08-12P	Screw	X	24
4	B526-8	Screw (do not substitute MS27039 screws)	X	4
5	G933-2	Bow Assembly	X	1
6	G935-2	Retainer (replaces F367-10 retainer)	X	1
7	C141-25	Washer	X	78
8	MS21042L08	Nut	X	78
9	AN526C832R9	Screw (Ref**)		
10	F273-1	Roof (Ref**)		
11	G367-15	Pad (install using item 12)	X	4
12	B270-26	Adhesive	X	A/R
13	G367-14	Pad (install using item 12)	X	6
14	B526-6	Screw (do not substitute MS27039 screws)	X	74
15	G367-10	Strap	X	20
16	A130-37	Spacer	X	1
17	AN526C832R6	Screw	X	2
18	–	Yaw String (Ref; yarn, white acrylic, 0.10-inch dia., 1.9-inch length from screw, trim yarn 0.06-inch max beyond washer. Source locally.)		
19	B204-2	Rivet (blind)	X	2
20	G935-7	Plate	X	1
21	NAS620-5	Washer ([2] with each item 18 between item 17 and item 5)	X	4
22	NAS1149FN816P	Washer	X	2
23	MS21042L08	Nut	X	2

NOTES * See Figure 52-21.
** See Figure 52-17.

Intentionally Blank

CHAPTER 53

FUSELAGE

Figure	*Title*	*Page*
53-1	Engine Cowling Installation	53.0
53-3	Mast Fairing Assembly	53.2
53-5	Tailcone Cowling Installation	53.4
53-7	Lower Frame Assemblies	53.6
53-11	Hydraulic Servo Support Frame Assembly	53.10
53-13	Upper Frame Assembly	53.12
53-15	Tailcone Assembly Installation	53.14
53-17	Tailcone Assembly Revision AW & Subsequent	53.16
53-21	Tailcone Assembly Revision AL thru AV	53.20
53-25	F004-2 Empennage Assembly	53.24
53-29	C004-2 & -3 Empennage Assembly	53.28
53-33	F050-2 Horizontal Stabilizer Installation	53.32
53-35	C050-2/G950-2 Stabilizer Installation	53.34
53-37	Wind Deflector Installation	53.36

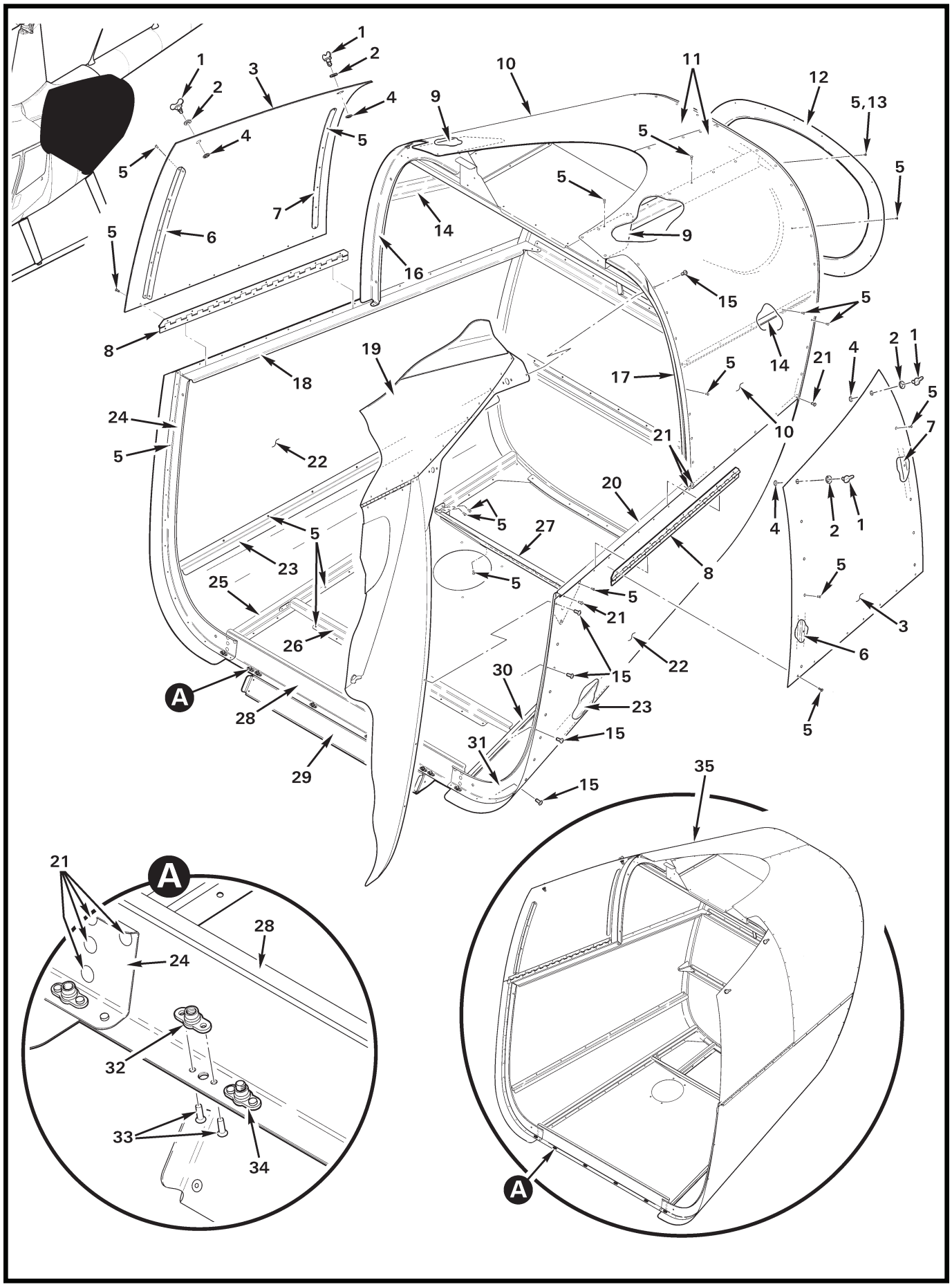
1
2
3
4
5
6
7
8
9
10
11
12
5,13
14
15
16
17
18
19
20
21
22
23
24
25
26
27
28
29
30
31
32
33
34
35
A

FIGURE AND INDEX NUMBER	PART NUMBER	DESCRIPTION	PARTS AVAIL	QTY PER ASSY
		ENGINE COWLING INSTALLATION		
53-1-1	85-12-140-16	Stud	X	4
2	85-46-101-39	Washer	X	4
3	G040-5	Door (RH and LH)	X	2
4	85-34-201-20	Retaining Ring	X	4
5	MS20470AD3	Rivet	X	A/R
6	G304-1	Stiffener (RH and LH door)	X	2
7	G928-3	Stiffener (RH and LH door)	X	2
8	G925-4	Hinge	X	2
9	G309-7	Doubler (RH and LH)	X	2
10	G040-7	Engine Cowling Assembly – Aft (w/AC; includes items 5 thru 9, 11, 14, 16 thru 18, 20 thru 34)	X	1
11	G040-4	Skin (RH and LH)	X	2
12	G039-2	Ring (blank; drill-to-fit after exhaust pipe replacement)	X	1
13	MS20604R3W1	Rivet (may be used instead of item 5 for [4] upper rivets)	X	4
14	G307-9	Stiffener (RH and LH)	X	2
15	MS27039C0806	Screw	X	10
16	G306-2	Stiffener (RH)	X	1
17	G306-1	Stiffener (LH)	X	1
18	G307-4	Stiffener (RH)	X	1
19	G004	Fuselage Assembly – Aft (Ref)		
20	G307-3	Stiffener (LH)	X	1
21	MS20470AD4	Rivet	X	38
22	G040-3	Skin (RH and LH)	X	2
23	G307-10	Stiffener (RH and LH)	X	2
24	G305-2	Stiffener (RH)	X	1
25	G307-4	Stiffener (RH)	X	1
26	G312-1	Stiffener (forward)	X	1
27	G312-2	Stiffener (aft, install using item 5 [9])	X	1
28	G308-1	Stiffener	X	1
29	G311-10	Scoop (Ref)		
30	G307-3	Stiffener (LH)	X	1
31	G305-1	Stiffener (LH)	X	1
32	MS21069L08	Nutplate	X	6
33	NAS1097AD3	Rivet	X	A/R
34	MS21069L08	Nutplate (installed on item 10 only)	X	2

NOTES

Continues

FIGURE AND INDEX NUMBER	PART NUMBER	DESCRIPTION	PARTS AVAIL	QTY PER ASSY
		ENGINE COWLING INSTALLATION (Cont'd)		
53-1-35	G040-1	Engine Cowling Assembly – Aft (w/o AC; includes items 5 thru 9, 11, 14, 16 thru 18, 20 thru 28, 30, and 31)	X	1

NOTES

Intentionally Blank

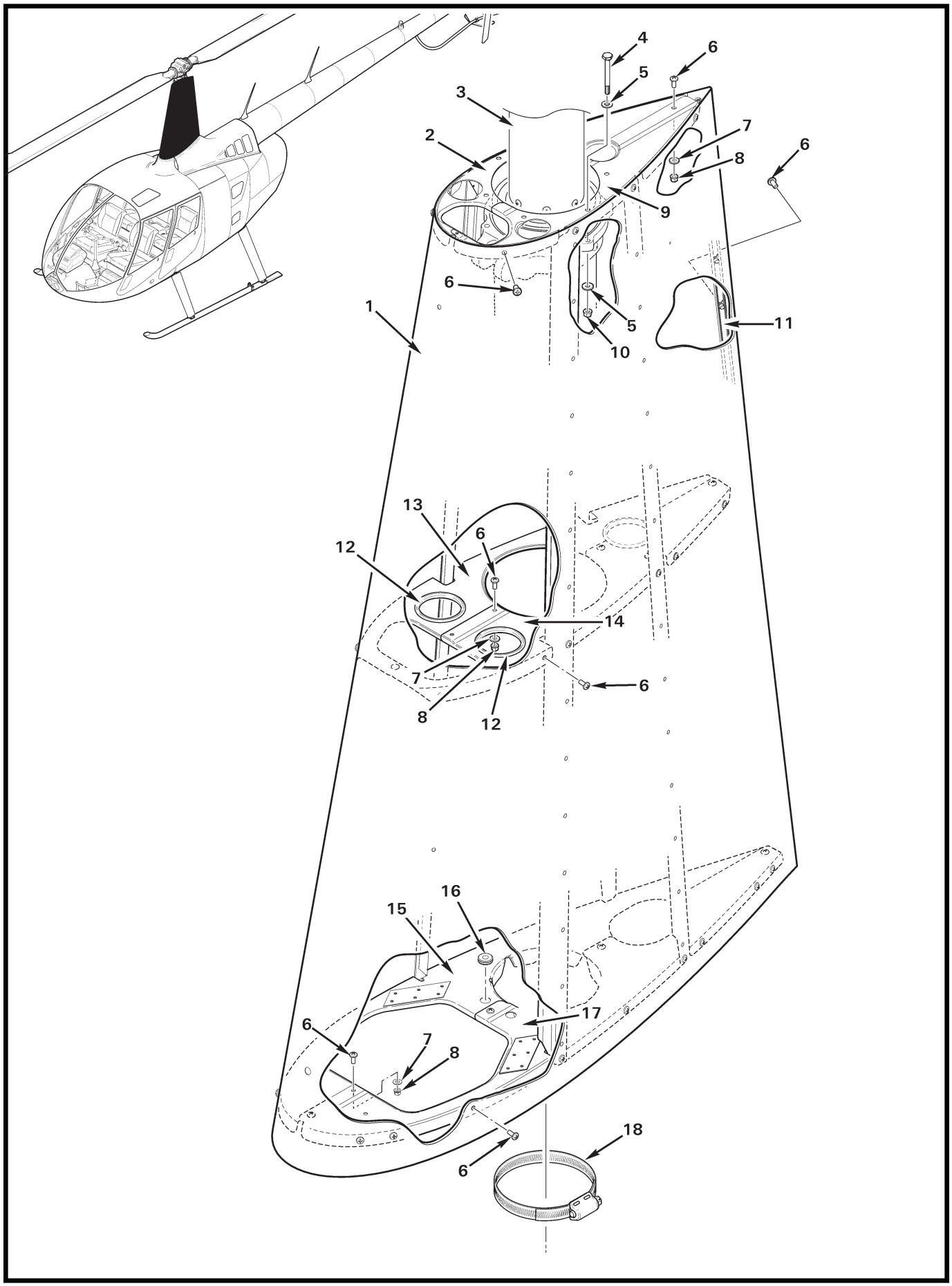
4
6
5
3
7
2
8
6
9
6
1
5
11
10
13
6
12
14
7
6
8
12
16
15
17
6
7
8
18
6

FIGURE AND INDEX NUMBER	PART NUMBER	DESCRIPTION	PARTS AVAIL	QTY PER ASSY
		MAST FAIRING ASSEMBLY		
53-3-1	F261-1	Mast Fairing Assembly (Incl items 2, 6 thru 9, and 11 thru 18)	X	1
2	F261-18	Rib-Upper (RH)	X	1
	C261-6	Rib-Upper (RH; earlier aircraft)	O	1
3	F006	Main Rotor Gearbox Assembly (Ref)		
4	NAS6603	Bolt (Ref, see Figure 63-7)		
5	NAS1149F0332P	Washer	X	12
6	MS27039C0806	Screw	X	60
7	NAS1149FN816P	Washer	X	12
8	MS21042L08	Nut	X	12
9	F261-17	Rib – Upper (LH)	X	1
	C261-5	Rib – Upper (LH; earlier aircraft)	O	1
10	MS21042L3	Nut	X	6
11	A738-39	Gang Channel	X	1
12	NAS557-28A	Grommet	X	3
13	F261-16	Rib – Middle (RH)	X	1
14	F261-15	Rib – Middle (LH)	X	1
15	F261-14	Rib – Lower (RH)	X	1
16	MS35489-6	Grommet	X	1
17	F261-13	Rib – Lower (LH)	X	1
18	B277-064	Clamp (around mast tube)	X	1

NOTES

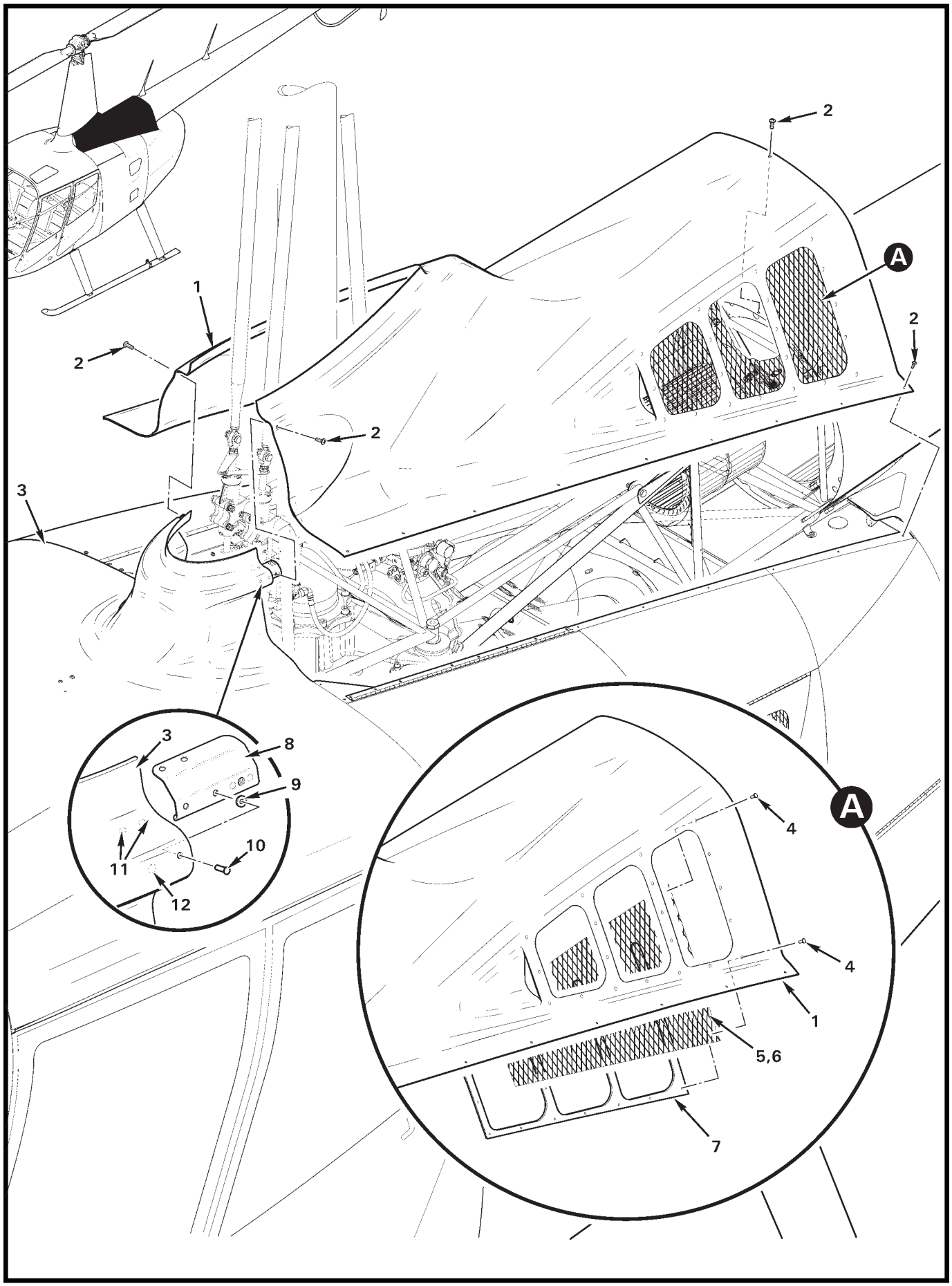

FIGURE 53-5 TAILCONE COWLING INSTALLATION

FIGURE AND INDEX NUMBER	PART NUMBER	DESCRIPTION	PARTS AVAIL	QTY PER ASSY
		TAILCONE COWLING INSTALLATION		
53-5-1	F706-1	Cowling	X	1
2	MS27039C0806	Screw	X	22
3	F015	Cabin Assembly (Ref)		
4	NAS9301B-4-04	Rivet	X	40
5	G911-3	Screen (LH)	X	1
6	G911-4	Screen (RH, not shown)	X	1
7	G911-2	Retainer	X	2
8	G921-9	Bracket Assembly (Ref; LH)		
	G921-10	Bracket Assembly (Ref; RH)		
9	NAS620-5	Washer	X	2
10	MS20426AD4	Rivet (aft location)	X	2
11	MS20470AD4	Rivet (Ref)		
12	MS20426AD4	Rivet (Ref; forward location)		

NOTES

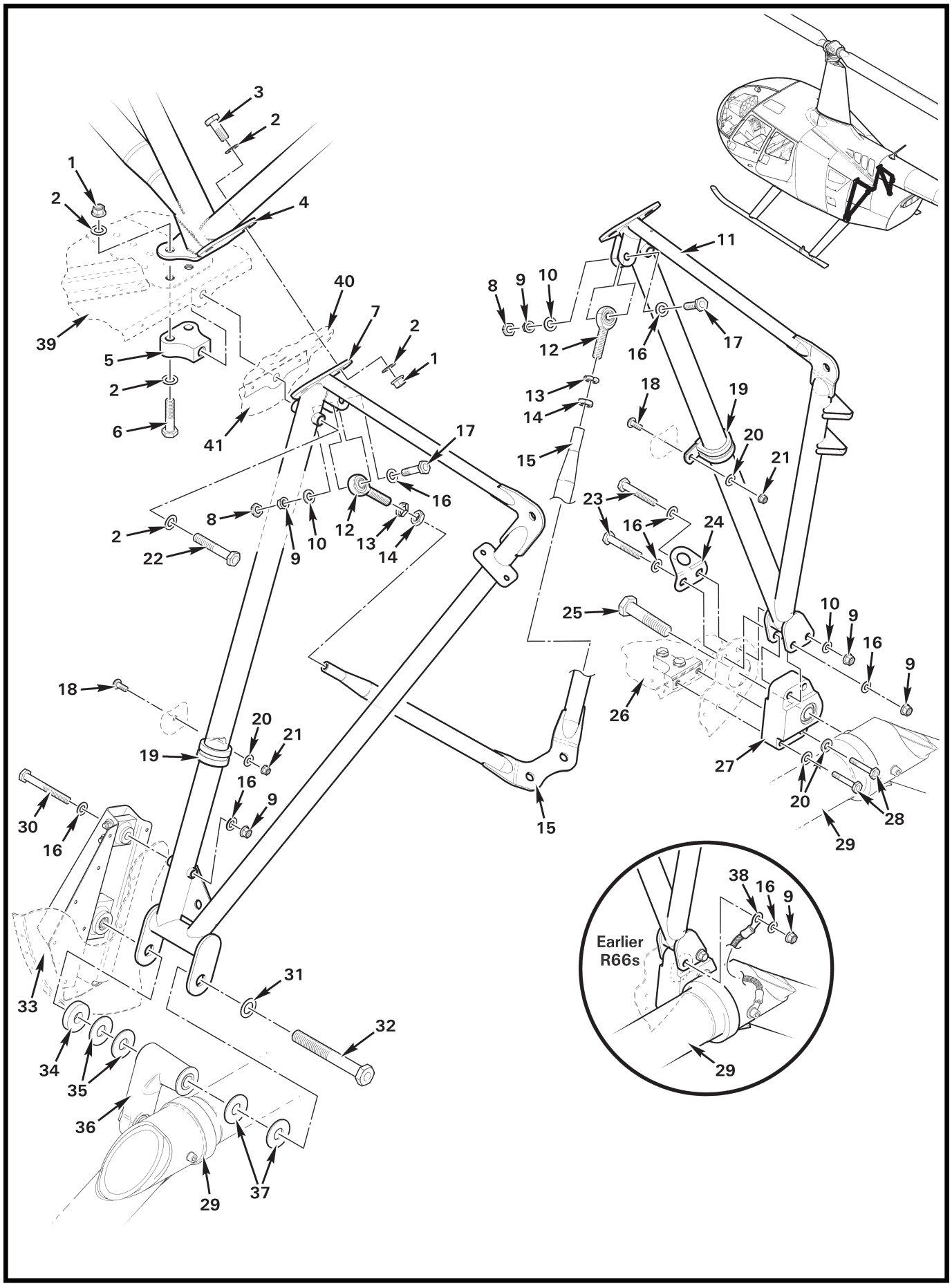
3
2
1
2
4
39
5
2
6
40
7
2
1
41
11
8
9
10
12
16
17
13
14
18
19
20
21
15
17
16
8
9
10
12
13
14
2
22
23
16
24
25
10
9
16
9
26
18
20
21
19
16
9
30
16
27
20
28
29
15
33
31
32
34
35
36
29
37
38
16
9
Earlier
R66s
29

FIGURE AND INDEX NUMBER	PART NUMBER	DESCRIPTION	PARTS AVAIL	QTY PER ASSY
		LOWER FRAME ASSEMBLIES		
53-7-1	D210-5	Nut	X	8
2	NAS1149F0532P	Washer	X	26
3	NAS6605-5	Bolt	X	4
4	F020-1	Frame Weldment (upper frame assy.; Ref; see Figure 53-13)		
5	F574-10	Block Assembly	X	2
6	NAS6605-14	Bolt	X	4
7	F046-1*	Frame Weldment (LH, lower frame assembly)	X	1
8	B330-13	Palnut	X	2
9	D210-4	Nut	X	4
10	NAS1149F0463P	Washer	X	2
11	F046-2*	Frame Weldment (RH, lower frame assembly)	X	1
12	F101-4	Rod End (elastomeric)	X	2
13	B330-16	Palnut	X	2
14	AN316-5R	Nut	X	2
15	F174-1	Support Weldment	X	1
16	NAS1149F0432P	Washer	X	4
17	NAS6604-10	Bolt	X	2
18	MS27039C1-07	Screw	X	2
19	MS21919WDG14	Clamp	X	2
20	NAS1149F0332P	Washer	X	4
21	D210-3	Nut	X	2
22	NAS6605-22	Bolt	X	2
23	NAS6604-18	Bolt	X	1
24	G914-5	Tab	X	1
25	NAS6607P20	Bolt (Ref; see Figure 32-1)		
26	G024-1	Floor Assembly (Ref)		
27	F574-1	Support Assembly	X	1
28	NAS6603-13	Bolt	X	2
29	F014-2	Landing Gear Assembly (Ref; see Figure 32-1)		
30	NAS6604-28	Bolt	X	1
31	NAS1149F0732P	Washer	X	1
32	NAS6607P44	Bolt	X	1
33	G004-1	Fuselage Assembly (Ref)		
34	C141-6	Washer	X	1
35	C141-5	Washer	X	2

NOTES * Apply B270-1 sealant (item 42) around frame where it attaches to cabin.

Continues

FIGURE AND INDEX NUMBER	PART NUMBER	DESCRIPTION	PARTS AVAIL	QTY PER ASSY
		LOWER FRAME ASSEMBLIES (Cont'd)		
53-7-36	C276-3	Shackle Assembly (Ref; see Figure 32-1)		
37	A214-10	Washer	X	2
38	A936-3	Wire Assembly (Ref; see Figure 32-1. Earlier R66s.)		
39	G023-1	Ceiling Assembly – Baggage Compartment (Ref)		
40	F384-1	Doubler (Ref)		
41	F234-1	Firewall (Ref)		
42	B270-1	Sealant	X	A/R

NOTES

Intentionally Blank

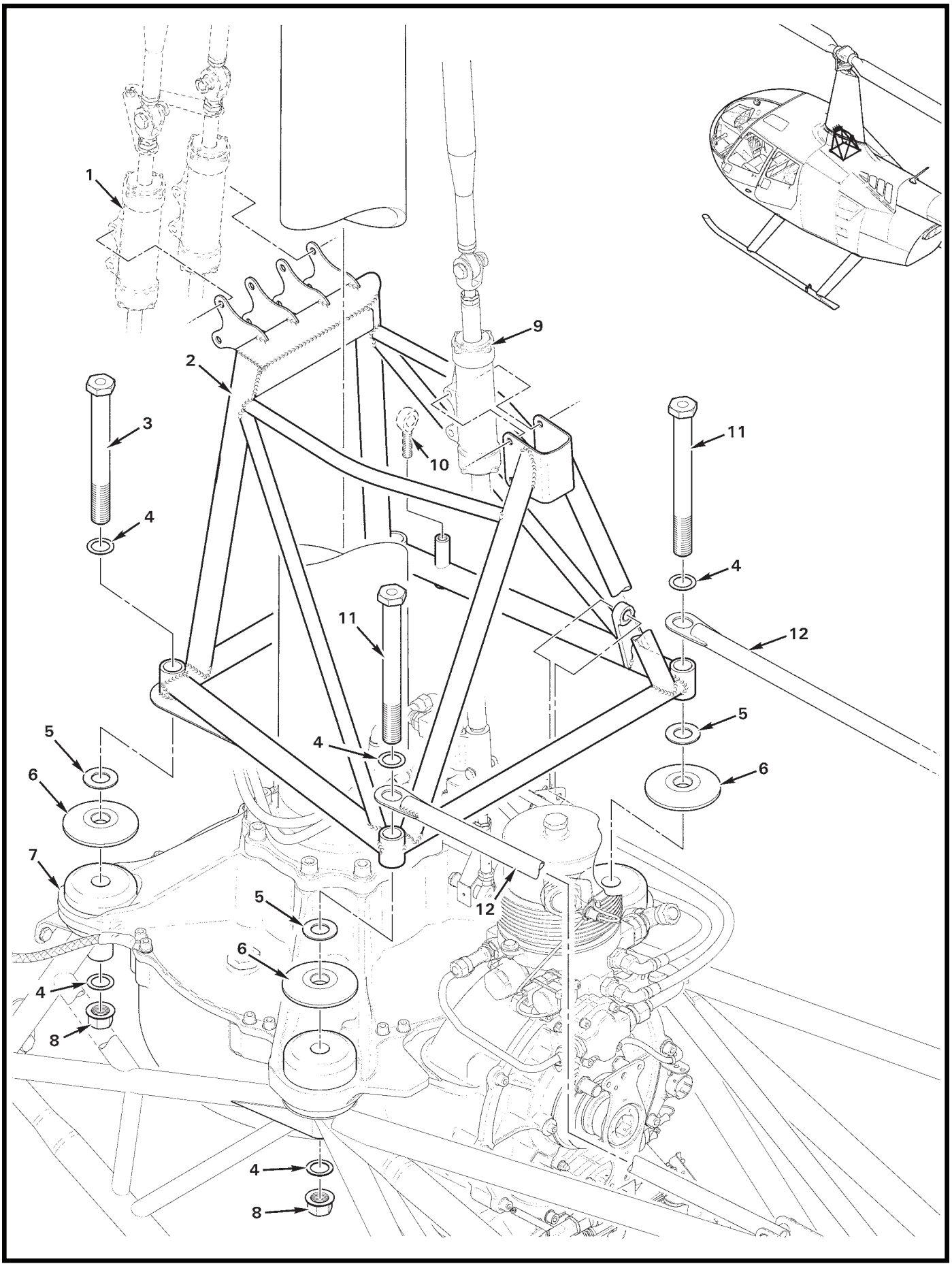
1
2
3
4
9
10
11
4
11
12
5
6
4
5
6
7
5
12
6
4
8
4
8

FIGURE AND INDEX NUMBER	PART NUMBER	DESCRIPTION	PARTS AVAIL	QTY PER ASSY
		HYDRAULIC SERVO SUPPORT FRAME ASSEMBLY		
53-11-1	D212-5	Forward Servo (Ref; see Figure 29-7)		
2	G201-1	Frame Weldment	X	1
3	F650-1	Bolt	X	2
4	A141-21	Washer	X	8
5	NAS1149F1063P	Washer	X	4
6	A267-1	Washer	X	4
7	F006-1	Main Rotor Gearbox Assembly (Ref; see Figure 63-3)		
8	D210-10	Nut (Install with A257-9 on bolt threads.)	X	4
9	D212-6	Aft Servo (Ref; see Figure 29-11)		
10	B163-2	Rod End (Ref; see Figure 67-25)		
11	F650-2	Bolt	X	2
12	F235-13	Strut Assembly (Ref; see Figure 53-13)		

NOTES

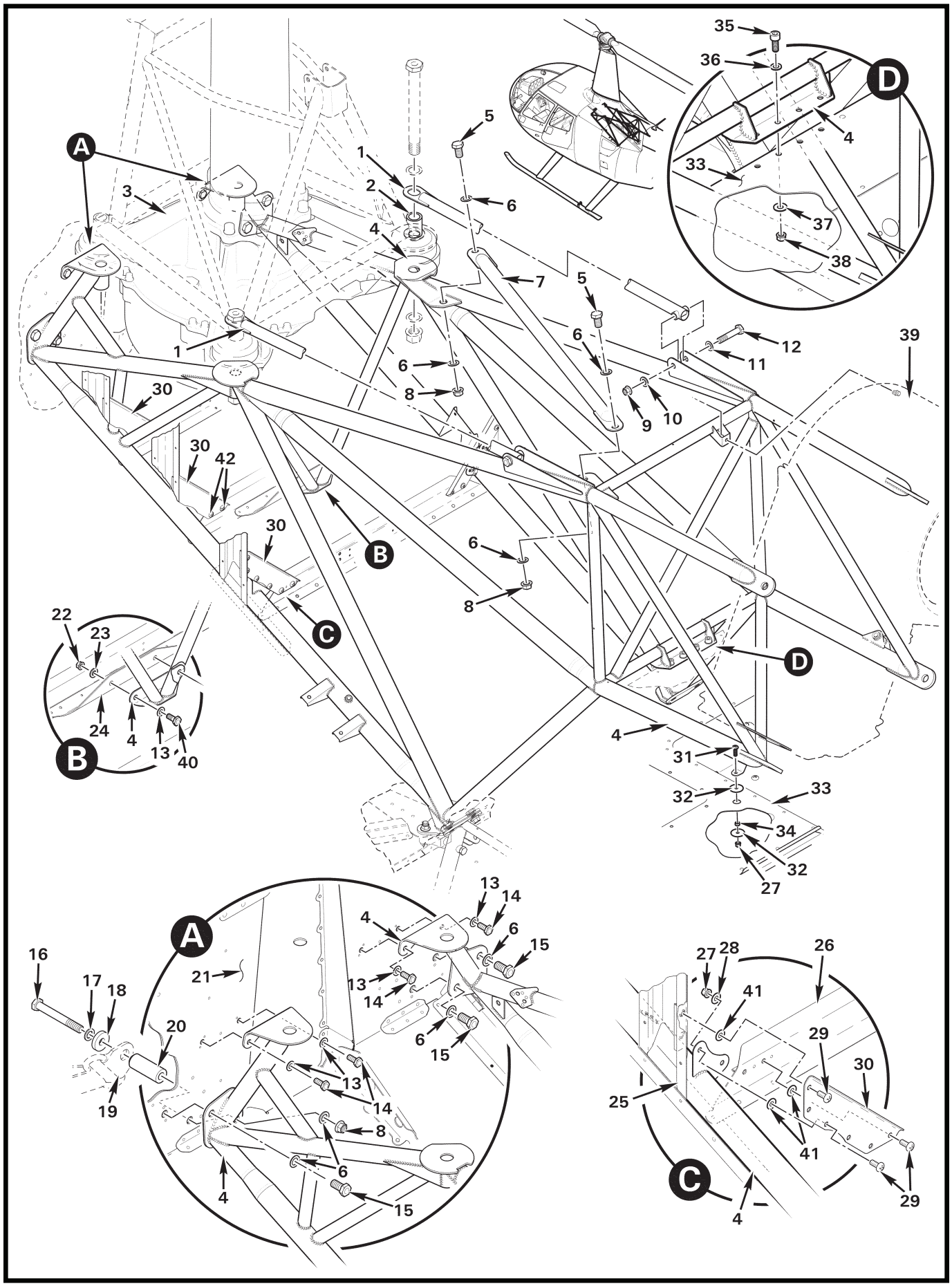
A
B
C
D
1
2
3
4
5
6
7
8
9
10
11
12
13
14
15
16
17
18
19
20
21
22
23
24
25
26
27
28
29
30
31
32
33
34
35
36
37
38
39
40
41
42

FIGURE AND INDEX NUMBER	PART NUMBER	DESCRIPTION	PARTS AVAIL	QTY PER ASSY
		UPPER FRAME ASSEMBLY		
53-13-1	F235-13	Strut Assembly	X	2
2	G201-1	Frame Weldment (hydraulic support; Ref)		
3	F006-1	Main Rotor Gearbox Assembly (Ref; see Figure 63-3)		
4	F020-1*	Frame Weldment (upper frame assembly)	X	1
5	NAS6606-1	Bolt	X	2
6	NAS1149F0632P	Washer	X	8
7	F252-1	Strut	X	1
8	D210-6	Nut	X	3
9	D210-5	Nut	X	2
10	NAS1149F0563P	Washer	X	2
11	NAS1149F0532P	Washer	X	2
12	NAS6605-17	Bolt	X	2
13	NAS1149F0432P	Washer	X	6
14	NAS6604-3	Bolt	X	4
15	NAS6606-3	Bolt	X	3
16	NAS6606-36	Bolt	X	1
17	NAS1149F0663P	Washer	X	1
18	C141-16	Washer	X	1
19	505281-1	Guide (seat belt, Ref)		
20	F374-7	Spacer	X	1
21	F560-1	Cabin Bulkhead Assembly (LH, Ref)		
22	D210-4	Nut	X	2
23	NAS1149F0463P	Washer	X	2
24	G258-2	Bracket (Ref)		
25	F231-1	Stiffener (Ref)		
26	F231-7	Stiffener (Ref)		
27	MS21042L08	Nut	X	4
28	NAS1149FN816P	Washer	X	4
29	MS27039C0807	Screw	X	12
30	F231-8	Brace	X	6
31	MS27039C0808	Screw	X	2
32	C141-22	Washer	X	4
33	G234-1	Firewall (Ref)		
34	C130-33	Spacer	X	2
35	NAS1351-3-8P	Screw	X	4

NOTES * Apply B270-1 sealant (item 43) around frame where it attaches to cabin.

Continues

FIGURE AND INDEX NUMBER	PART NUMBER	DESCRIPTION	PARTS AVAIL	QTY PER ASSY
		UPPER FRAME ASSEMBLY (Cont'd)		
53-13-36	NAS620-10L	Washer	X	4
37	NAS1149F0332P	Washer	X	4
38	D210-3	Nut	X	4
39	F236-1	Scroll Assembly (Ref, see Figure 79-1)		
40	NAS6604-2	Bolt (formerly NAS6604-3)	X	2
41	NAS1149FN816P	Washer (and/or NAS1149FN832P; shim as required to align F231-8 bracket with F020-1 frame tab and cabin stiffener.)	X	A/R
42	MS27039C0806	Screw	X	16
43	B270-1	Sealant	X	A/R

NOTES

Intentionally Blank

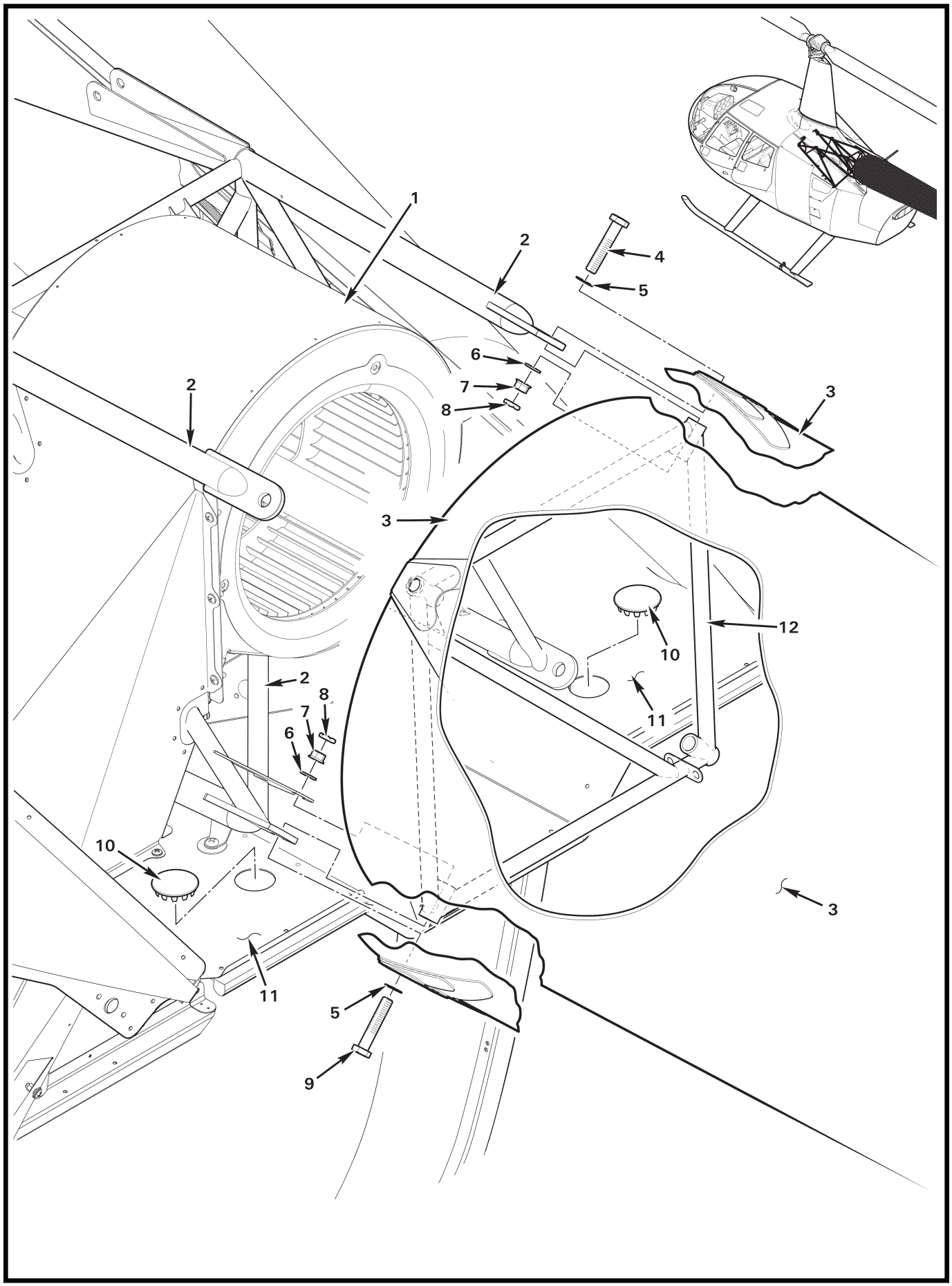
1
2
4
5
6
7
8
2
3
3
12
10
2
8
7
6
11
10
3
11
5
9

FIGURE AND INDEX NUMBER	PART NUMBER	DESCRIPTION	PARTS AVAIL	QTY PER ASSY
		TAILCONE ASSEMBLY INSTALLATION		
53-15-1	F236-1	Scroll Assembly (Ref; see Figure 79-1.)		
2	F020-1	Frame Weldment (Upper frame, ref; see Figure 53-13.)		
3	C023	Tailcone (Ref; see Figure 53-17 or 53-21.)		
4	NAS6607-23	Bolt (Was NAS6607-24. Install [1] each upper RH & LH locations.)	X	2
5	NAS1149F0732P	Washer	X	4
6	C141-4	Washer (0.063-inch thick, 0.700-inch O.D.)	X	4
7	D210-7	Nut	X	4
8	B330-21	Palnut	X	4
9	NAS6607-24	Bolt (Was NAS6607-25 at lower LH side. Install [1] each lower RH & LH locations.)	X	2
10	B209-9	Plug	X	2
11	G234-1	Firewall (Ref)		
12	F237-1	Frame Weldment	X	1

NOTES

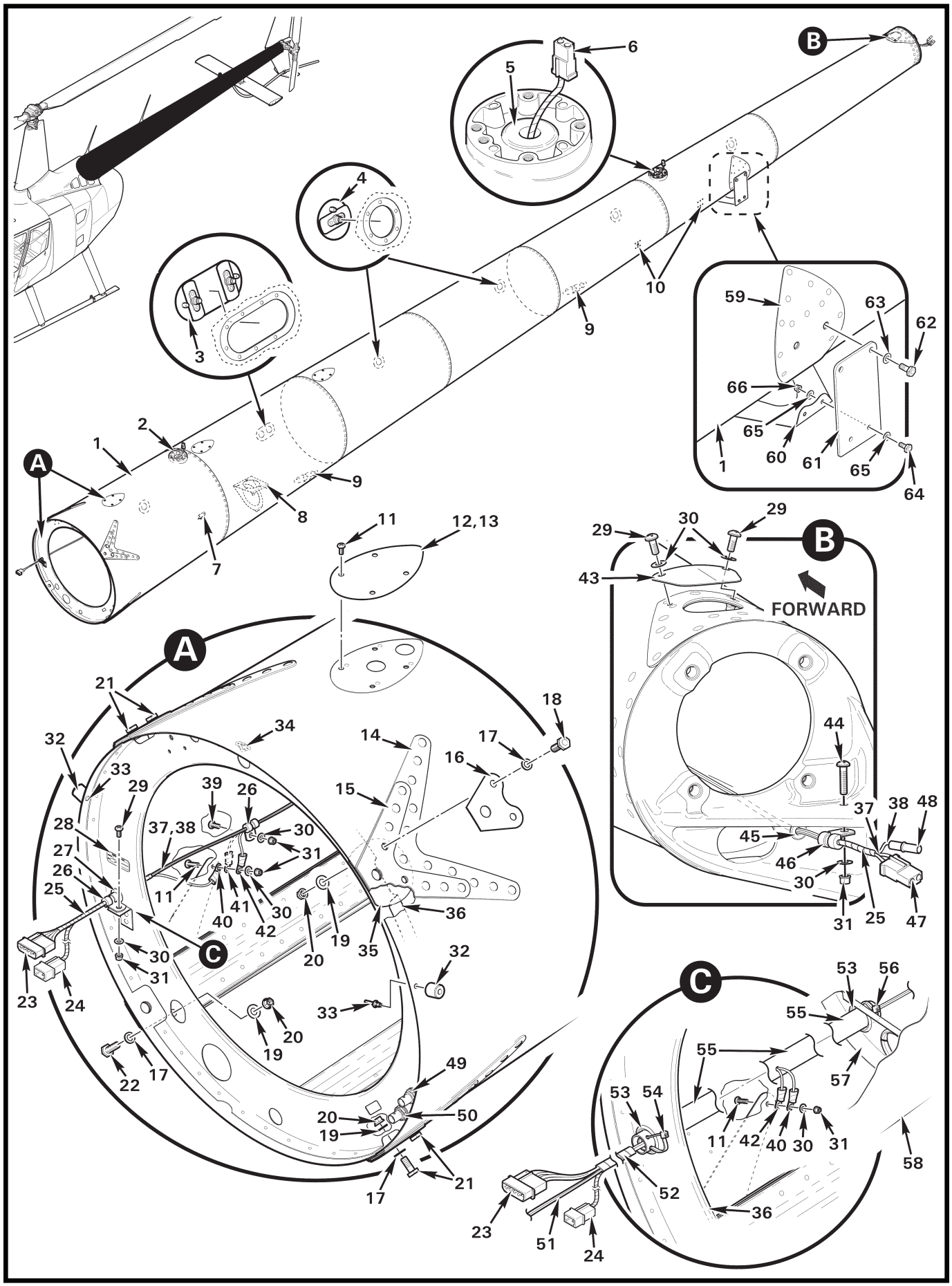
A
B
C
FORWARD
1
2
3
4
5
6
7
8
9
10
11
12,13
14
15
16
17
18
19
20
21
22
23
24
25
26
27
28
29
30
31
32
33
34
35
36
37,38
39
40
41
42
43
44
45
46
47
48
49
50
51
52
53
54
55
56
57
58
59
60
61
62
63
64
65
66

FIGURE AND INDEX NUMBER	PART NUMBER	DESCRIPTION	PARTS AVAIL	QTY PER ASSY
		TAILCONE ASSEMBLY – REVISION AW & SUBSEQUENT		
53-17-1	C023-21*	Tailcone Assembly – Three Antenna (Does not include items 9, 10, & 49 thru 56. Also order items 67 & 68, as required.)	X	1
	C023-24*	Tailcone Assembly – E.N.G. (Does not include items 10, 26, & 27. Also order items 67 & 68, as required.)	O	1
	C023-34*	Tailcone Assembly – Five Antenna (Does not include items 10, & 51 thru 56. Also order items 67 & 68, as required.)	X	1
	C023-35*	Tailcone Assembly – Three Antenna and Nav Antenna (Does not include items 49 thru 56. Also order items 67 & 68, as required.)	X	1
2	G685	Forward Strobe Installation (Ref; B528-3 mount shown – optional equipment.)		
3	A231-10	Plug Assembly (includes MS27039C0807 screws)	X	1
4	A231-1	Plug Assembly (includes MS27039C0807 screw)	X	5
5	MS35489-15	Grommet	X	1
6	B263-13	Housing	X	1
	B263-2	Socket	X	2
7	F950-15	Angle Assembly	X	1
8	F950-20	Bracket Assembly	X	1
9	—	(Ref; antenna location, C023-24 & -34 tailcones only.)		
10	—	(Ref; antenna location, C023-35 tailcone only.)		
11	MS27039C0807	Screw	X	A/R
12	B322-2	Cover (install using item 13 when antenna not installed)	X	A/R
13	B270-13	Sealant	X	A/R
14	D078-3	Doubler (Ref)		
15	D078-2	Doubler (Ref)		
16	D078-1	Doubler	X	4
17	NAS1149F0432P	Washer	X	8
18	NAS6604-3	Bolt	X	2
19	A141-11	Washer	X	8
20	D210-4	Nut	X	8
21	NAS6604-4	Bolt	X	4
22	NAS6604-5	Bolt	X	2
23	B263-16	Housing	X	1
	B263-1	Pin (wires -109, -5, -503, & -2038)	X	4
24	B263-12	Housing	X	1
	B263-3	Pin (wire -2854, tailcone ground)	X	1
	B263-1	Pin (wire -2388, optional forward strobe power)	X	1

NOTES * Tailcone revision AW & subsequent available only to countries eligible for symmetric stabilizer installation, refer to SL-45 (current revision).

Continues

FIGURE AND INDEX NUMBER	PART NUMBER	DESCRIPTION	PARTS AVAIL	QTY PER ASSY
		TAILCONE ASSEMBLY – REVISION AW & SUBSEQUENT (Cont'd)		
53-17-25	B161-2	Spirap	X	A/R
26	MS21919WDG2	Clamp	X	2
27	B401-4	Grommet	X	1
28	A651-1	Data Plate (Ref)		
29	MS27039C0806	Screw	X	A/R
30	NAS1149FN816P	Washer	X	A/R
31	MS21042L08	Nut	X	A/R
32	F288-2	Bumper	X	2
33	NAS9301B-4-02	Rivet	X	2
34	MS21069L08	Nutplate (install using MS20426AD3 rivets)	X	1
35	F288-3	Doubler	X	1
36	D070-1	Bulkhead Assembly (Ref)		
37	-5	Wire (Ref)		
	-503	Wire (Ref)		
38	-109	Wire (Ref)		
39	MS27039C0806	Screw	X	1
	MS27039C0805	Screw (C023-24 Tailcone only)	X	1
40	B260-9	Terminal (wire -2854, tailcone ground)	X	1
41	B260-3	Terminal (wire -2734, optional forward strobe ground)	X	1
42	B260-3	Terminal (wire -2039, aft strobe ground)	X	1
43	A558-2	Cover – Inspection (transparent)	X	1
44	MS27039C0808	Screw (or MS27039C0809 thru MS27039C0811)	X	1
45	MS35489-33	Grommet	X	1
46	MS21919WDG2	Clamp	X	1
	MS21919WDG3	Clamp (C023-24 Tailcone only)	X	1
47	B263-13	Housing	X	1
	B263-2	Socket	X	2
48	B263-11	Housing	X	1
	B263-2	Socket	X	1
49	5221221-2	Jack (Ref, C023-24 Tailcone only; see Figure 6-29.)		
	5225398-6	Jack (Ref, C023-34 Tailcone only; see Figure 6-29.)		
50	5225398-6	Jack (Ref, C023-24 & -34 Tailcones; see Figure 6-29.)		
51	C023-757	Cable (Ref)		
	C023-2815	Wire (Ref)		
52	B161-4	Spirap (C023-24 tailcone only)	X	A/R

NOTES

Continues

FIGURE AND INDEX NUMBER	PART NUMBER	DESCRIPTION	PARTS AVAIL	QTY PER ASSY
		TAILCONE ASSEMBLY – REVISION AW & SUBSEQUENT (Cont'd)		
53-17-53	NAS557-10A	Grommet (C023-24 tailcone only)	X	8
54	MS3367-5-9	Ty-Rap (securing wires)	X	1
55	D686-1	Conduit (C023-24 tailcone only)	X	1
56	MS3367-5-9	Ty-Rap (around item 55)	X	1
57	D080-1	Bulkhead Assembly (Ref)		
58	C023-12	Skin (Ref)		
59	F955-2	Doubler (Ref)		
60	F955-1	Bracket (Ref)		
61	MT023-2	Support (Temporarily installed to support item 60 when F050-2 not installed.)	X	2
62	NAS6604-3	Bolt	X	4
63	NAS1149F0432P	Washer	X	4
64	NAS6603-2	Bolt	X	4
65	NAS1149F0332P	Washer	X	8
66	D210-3	Nut	X	4
		* * *		
67	KI-276	R44-series and R66 B264-XX Connector Upgrade Kit Instructions (Replaces obsoleted B264-XX connectors with B263-XX connectors on: C049-1 tail rotor gearbox chip detector harness assembly, C023 tailcone aft wire harness, and tail light wire on C044 horizontal stabilizer harness.)	X	A/R
68	KI-277	C023 Tailcone with GMU 44 Magnetometer Installation Kit Instructions. R66 helicopter S/N 1068 & prior with GMU 44 installed in tailcone, order KI-277-1 to install GMU 44 on F950-20 bracket (compatible with GMU 44B) or KI-277-2 if GMU 44 originally installed in forward bay.	X	A/R

NOTES

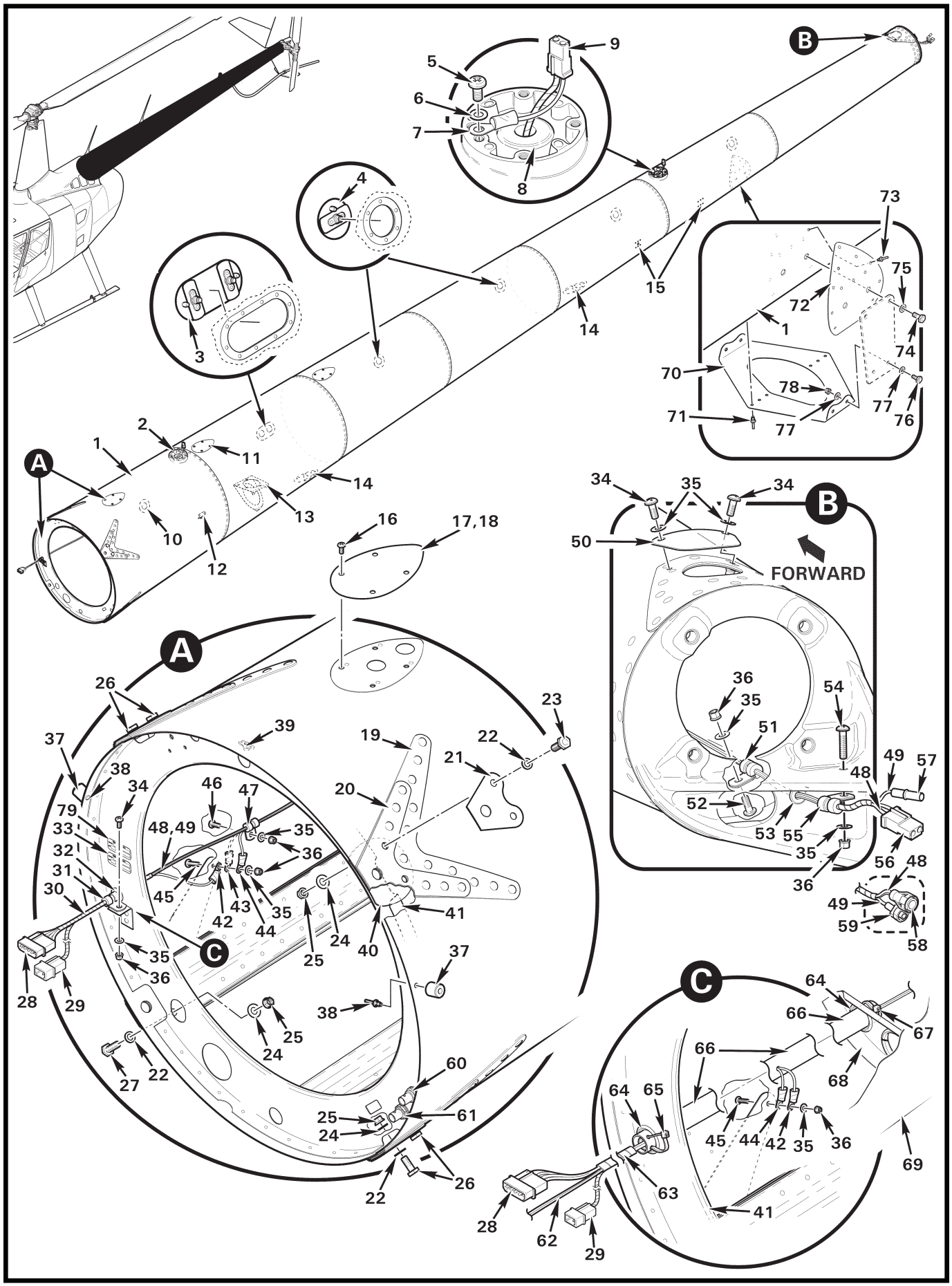
A
B
C
FORWARD

FIGURE AND INDEX NUMBER	PART NUMBER	DESCRIPTION	PARTS AVAIL	QTY PER ASSY
		TAILCONE ASSEMBLY – REVISION AL THRU AV		
53-21-1	C023-21*	Tailcone Assembly – Three Antenna (Does not include items 14, 15, 60 thru 67, & 70 thru 78. Also order items 80 and 81, as required.)	X	1
	C023-24*	Tailcone Assembly – E.N.G (Does not include items 15, 31, 32, 47, & 70 thru 78. Also order items 80 and 81, as required.)	X	1
	C023-34*	Tailcone Assembly – Five Antenna (Does not include items 15, 62 thru 67, & 70 thru 78. Also order items 80 and 81, as required.)	X	1
	C023-35*	Tailcone Assembly – Three Antenna and Nav Antenna (Does not include items 60 thru 67, & 70 thru 78. Also order items 80 and 81, as required.)	X	1
2	G685	Forward Strobe Installation (Ref; B528-3 mount shown – optional equipment.)		
3	A231-10	Plug Assembly (Tailcone revision AP thru AV; includes MS27039C0807 screws.)	X	1
4	A231-1	Plug Assembly (includes MS27039C0807 screw)	X	5
5	MS35206-227	Screw (Tailcone revision AL thru AP.)	X	1
6	NAS620-6L	Washer (Tailcone revision AL thru AP.)	X	1
7	B260-2	Terminal (Wire -2039; tailcone revision AL thru AP.)	X	1
8	MS35489-15	Grommet	X	1
9	B263-13	Housing	X	1
	B263-2	Socket	X	2
10	—	(Ref; TRDS runout inspection hole, tailcone revision AN thru AV.)		
11	—	(Ref; antenna location, tailcone revision AP thru AV.)		
12	F950-15	Angle Assembly (Standard equipment on revision AU tailcones, optional equipment on revision AT and prior tailcones.)	X	1
13	F950-4	Bracket (Compatible with GMU 44 magnetometer; standard equipment on revision AU tailcones, optional G500 equipment on revision AT and prior tailcones.)	X	1
	F950-20	Bracket (Compatible with GMU 44B magnetometer; standard equipment on revision AV tailcones.)	X	1
14	—	(Ref; antenna location, C023-24 & -34 tailcones only.)		
15	—	(Ref; antenna location, C023-35 tailcone only.)		
16	MS27039C0807	Screw	X	A/R
17	B322-2	Cover (install using item 18 when antenna not installed)	X	A/R
18	B270-13	Sealant	X	A/R

NOTES * Tailcone revision AV available only to countries not eligible for symmetric stabilizer installation, refer to SL-45 (current revision).

Continues

FIGURE AND INDEX NUMBER	PART NUMBER	DESCRIPTION	PARTS AVAIL	QTY PER ASSY
		TAILCONE ASSEMBLY – REVISION AL THRU AV (Cont'd)		
53-21-19	D078-3	Doubler (Ref)		
20	D078-2	Doubler (Ref)		
21	D078-1	Doubler	X	4
22	NAS1149F0432P	Washer	X	8
23	NAS6604-3	Bolt (or NAS6604-4)	X	2
24	A141-11	Washer	X	8
25	D210-4	Nut	X	8
26	NAS6604-4	Bolt	X	4
27	NAS6604-5	Bolt	X	2
28	B263-16	Housing	X	1
	B263-1	Pin (wires -109, -5, -503, & -2038)	X	4
29	B263-12	Housing (tailcone revision AR thru AV)	X	1
	B263-3	Pin (wire -2854, tailcone ground)	X	1
	B263-1	Pin (wire -2388, optional forward strobe power)	X	1
	B263-10	Housing (Ref, not shown; wire -2388, optional forward strobe power – tailcone revision AL thru AQ.)		
	B263-1	Pin (Ref)		
30	B161-2	Spirap	X	A/R
31	MS21919WDG2	Clamp	X	1
32	B401-4	Grommet	X	1
33	A651-1	Data Plate (Ref)		
34	MS27039C0806	Screw	X	A/R
35	NAS1149FN816P	Washer	X	A/R
36	MS21042L08	Nut	X	A/R
37	F288-2	Bumper	X	2
38	NAS9301B-4-02	Rivet	X	2
39	MS21069L08	Nutplate (install using MS20426AD3 rivets)	X	1
40	F288-3	Doubler	X	1
41	D070-1	Bulkhead Assembly (Ref)		
42	B260-9	Terminal (Wire -2854, tailcone ground; tailcone revision AR thru AV.)	X	1
43	B260-3	Terminal (Wire -2734, optional forward strobe ground; tailcone revision AQ thru AV.)	X	1
44	B260-3	Terminal (Wire -2039, aft strobe ground; tailcone revision AQ thru AV.)	X	1
45	MS27039C0807	Screw (Tailcone revision AQ thru AV.)	X	1

NOTES

Continues

FIGURE AND INDEX NUMBER	PART NUMBER	DESCRIPTION	PARTS AVAIL	QTY PER ASSY
		TAILCONE ASSEMBLY – REVISION AL THRU AV (Cont'd)		
53-21-46	MS27039C0806	Screw (tailcone revision AQ thru AV)	X	1
	MS27039C0805	Screw (Tailcone revision AQ thru AV; C023-24 tailcone only.)	X	1
47	MS21919WDG2	Clamp (tailcone revision AQ thru AV)	X	1
48	-5	Wire (Ref)		
	-503	Wire (Ref)		
49	-109	Wire (Ref)		
50	A558-2	Cover – Inspection (transparent)	X	1
51	MS21919WDG2	Clamp (tailcone revision AL thru AQ)	X	1
	MS21919WDG4	Clamp (Tailcone revision AL thru AQ; C023-24 tailcone only.)	X	1
52	MS27039C0806	Screw (tailcone revision AL thru AQ)	X	1
53	MS35489-33	Grommet	X	1
54	MS27039C0808	Screw (Or MS27039C0809 thru MS27039C0811; tailcone revision AR thru AV.)	X	1
55	MS21919WDG2	Clamp (tailcone revision AR thru AV)	X	1
	MS21919WDG3	Clamp (Tailcone revision AR thru AV; C023-24 tailcone only.)	X	1
56	B263-13	Housing	X	1
	B263-2	Socket	X	2
57	B263-11	Housing	X	1
	B263-2	Socket	X	1
58	B264-13	Plug (No longer available, replaced by item 56, order KI-276 as required.)	O	1
	B264-2	Socket (Ref)		
59	B264-11	Plug (No longer available, replaced by item 56, order KI-276 as required.)	O	1
	B264-1	Socket (Ref)		
60	5221221-2	Jack (Ref, C023-24 tailcone only; see Figure 6-29.)		
	5225398-6	Jack (Ref, C023-34 tailcone only; see Figure 6-29.)		
61	5225398-6	Jack (Ref, C023-24 & -34 tailcones; see Figure 6-29.)		
62	C023-757	Cable (Ref)		
	C023-2815	Wire (Ref)		
63	B161-4	Spirap (C023-24 tailcone only)	X	A/R
64	NAS557-10A	Grommet (C023-24 tailcone only)	X	8
65	MS3367-5-9	Ty-Rap (securing wires)	X	1
66	D686-1	Conduit (C023-24 tailcone only)	X	1
67	MS3367-5-9	Ty-Rap (around item 66)	X	1
68	D080-1	Bulkhead Assembly (Ref)		

NOTES

Continues

FIGURE AND INDEX NUMBER	PART NUMBER	DESCRIPTION	PARTS AVAIL	QTY PER ASSY
		TAILCONE ASSEMBLY – REVISION AL THRU AV (Cont'd)		
53-21-69	C023-12	Skin (Ref)		
70	F955-6*	Bracket (Ref)		
71	NAS9301B-5-03*	Rivet (Ref)		
72	F955-2*	Doubler (Ref)		
73	NAS9301B-5-02*	Rivet (Ref)		
74	NAS6604-3*	Bolt (Ref)		
75	NAS1149F0432P*	Washer (Ref)		
76	NAS6603-2*	Bolt (Ref)		
77	NAS1149F0332P*	Washer (Ref)		
78	D210-3*	Nut (Ref)		
79	A651-4*	B900-15 modification plate (Ref)		
		* * *		
80	KI-276	R44-series and R66 B264-XX Connector Upgrade Kit Instructions (Replaces obsoleted B264-XX connectors with B263-XX connectors on: C049-1 tail rotor gearbox chip detector harness assembly, C023 tailcone aft wire harness, and tail light wire on C044 horizontal stabilizer harness.)	X	A/R
81	KI-277	C023 Tailcone with GMU 44 Magnetometer Installation Kit Instructions. R66 helicopter S/N 1068 & prior with GMU 44 installed in tailcone, order KI-277-1 to install GMU 44 on F950-20 bracket (compatible with GMU 44B) or KI-277-2 if GMU 44 originally installed in forward bay.	X	A/R
82	KI-285-1	R66 Horizontal Stabilizer Retrofit Kit Instructions (Replaces C044-1 & -2 horizontal stabilizers with F044-1 vertical stabilizers mount assembly, and installs F050-2 horizontal symmetrical stabilizer assembly. Refer to R66 SL-45 (current revision) to determine eligibility.)	X	A/R

NOTES * See item 82.

Intentionally Blank

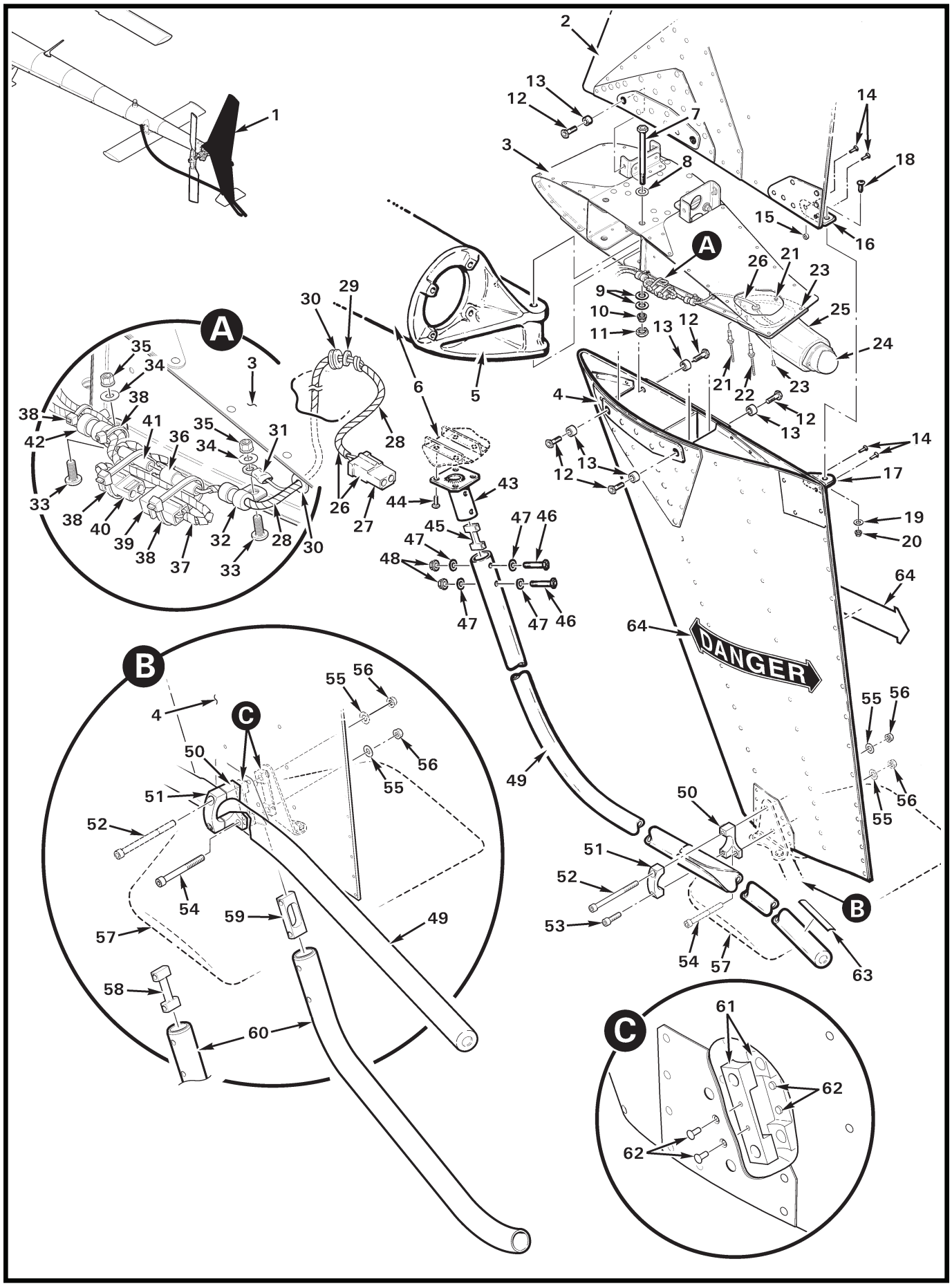
DANGER

FIGURE AND INDEX NUMBER	PART NUMBER	DESCRIPTION	PARTS AVAIL	QTY PER ASSY
		F004-2 EMPENNAGE ASSEMBLY		
53-25-1	F004-2*	Empennage Assembly (Incl items 2 thru 4, & 12 thru 20) . . .	X	1
2	C042-1	Stabilizer – Upper Vertical (does not include items 14 thru 16)	X	1
3	F044-1*	Mount Assembly – Vertical Stabilizers (Includes items 21 thru 23, 25, & 26; does not include item 24.)	X	1
4	C043-1	Stabilizer – Lower Vertical (includes items 61 & 62; does not include items 14, 17, 60, & 64)	X	1
5	C148	Bulkhead Assembly (Ref)		
6	C023-21, -24, -34, -35	Tailcone Assembly (Ref; see Figures 53-17 & 53-21.)		
7	NAS6606-47	Bolt (or NAS6606-48)	X	2
8	NAS1149F0632P	Washer	X	2
9	NAS1149F0663P	Washer (under nut, as required to meet torque requirements per R66 MM § 20-30 Part E.)	X	A/R
10	D210-6	Nut	X	2
11	B330-19	Palnut	X	2
12	NAS6604-6	Bolt	X	8
13	C130-9	Spacer	X	8
14	MS20470AD4	Rivet	X	4
15	A130-14	Spacer	X	1
16	C554-2	Clip – Upper Vertical Stabilizer	X	1
17	C554-1	Clip – Lower Vertical Stabilizer	X	1
18	MS35206-228	Screw	X	1
19	NAS1149FN616P	Washer	X	1
20	MS21042L06	Nut	X	1
21	NAS9301B-4-01	Rivet (or NAS9301B-4-02)	X	2
22	NAS9301B-4-02	Rivet (or NAS9301B-4-03)	X	1
23	MS20470AD3	Rivet	X	2
24	01-0771554-01**	Light Assembly – Tail Light (Ref; see Figure 33-3)		
25	C529-1	Mount Assembly – Tail Light	X	1
26	D049-8	Wire Harness Assembly – Tail Light (Includes items 27 thru 31, 36, and wires; assembled.)	X	1
27	B263-13	Housing	X	1
	B263-2	Socket	X	2
28	B161-2	Spirap	X	A/R
29	90295A075	Washer	X	1
30	MS35489-4	Grommet	X	2
31	B260-3	Terminal	X	1

NOTES * May only be installed if F955-1 bracket is installed on tailcone, see Figures 53-17 & 53-21.

** Whelen part number.

Continues

FIGURE AND INDEX NUMBER	PART NUMBER	DESCRIPTION	PARTS AVAIL	QTY PER ASSY
		F004-2 EMPENNAGE ASSEMBLY (Cont'd)		
53-25-32	MS21919WDG2	Clamp	X	1
33	MS27039C0806	Screw	X	2
34	NAS1149FN816P	Washer	X	2
35	MS21042L08	Nut	X	2
36	B263-10	Housing	X	1
	B263-1	Pin	X	1
37	C049-4	Harness Assembly – Chip detector (Ref; see Figure 65-9)		
38	MS3367-5-0	Ty-Rap	X	A/R
39	B263-12	Housing (Ref; see Figure 65-9)		
	B263-1	Pin (Ref)		
40	B263-13	Housing (Ref; see Figures 53-17 & 53-21)		
	B263-2	Socket (Ref)		
41	B263-11	Housing (Ref; see Figures 53-17 & 53-21)		
	B263-2	Socket (Ref)		
42	MS21919WDG3	Clamp	X	1
43	D082-1	Tube Assembly – Tail Rotor Guard Mount (lightly coat mating surface to item 49 with wet primer)	X	1
44	MS27039C1-07	Screw	X	4
45	D081-1	Spacer (lightly coat mating surface to item 43 with wet primer prior to installation)	X	1
46	NAS6603-16	Bolt (install using wet primer on shank)	X	2
47	NAS1149F0332P	Washer	X	4
48	D210-3	Nut	X	2
49	D079-1	Tail Rotor Guard Assembly (Revision V and subsequent only. Includes item 63; does not include items 43 and 45. Lightly coat inside top of guard with wet primer prior to installing item 43. Seal around seam with primer after installation.)	X	1
50	D081-4	Block Assembly	X	1
51	D081-2	Block – Cap	X	1
52	NAS1351-4-53P	Screw	X	1
53	NAS1352-3-14P	Screw	X	1
54	NAS1351-4-38P	Screw	X	1
55	NAS1149F0432P	Washer	X	2
56	D210-4	Nut	X	2
57	C050-2	Stabilizer Assembly (Ref; see Figure 53-35)		
58	C470-3	Spacer (Ref; revision I and prior, no longer available.)		

NOTES

Continues

FIGURE AND INDEX NUMBER	PART NUMBER	DESCRIPTION	PARTS AVAIL	QTY PER ASSY
		F004-2 EMPENNAGE ASSEMBLY (Cont'd)		
53-25-59	C470-3	Spacer	X	1
60	C470-1	Tail Skid	X	1
61	C470-2	Block	X	2
62	MS20426AD3	Rivet	X	4
63	C654-18	Decal – "NO HAND HOLD"	X	1
64	C654-2	Decal – "DANGER"	X	2

NOTES

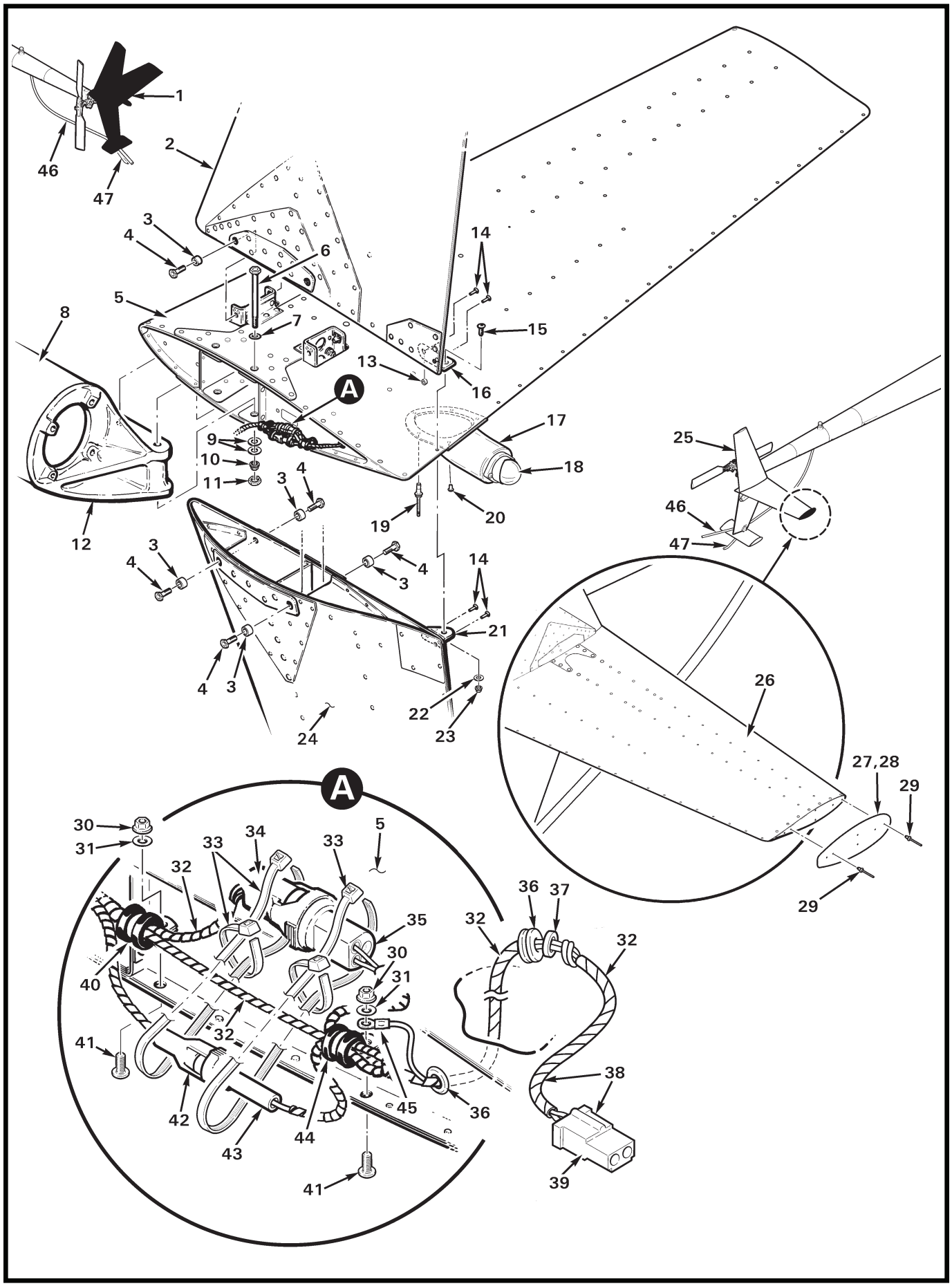
1
2
3
4
5
6
7
8
9
10
11
12
13
14
15
16
17
18
19
20
21
22
23
24
25
26
27,28
29
30
31
32
33
34
35
36
37
38
39
40
41
42
43
44
45
46
47
A

FIGURE AND INDEX NUMBER	PART NUMBER	DESCRIPTION	PARTS AVAIL	QTY PER ASSY
		C004-2 & -3 EMPENNAGE ASSEMBLY		
53-29-1	C004-2*	Empennage Assembly (Incl items 2 thru 5, 13 thru 16, and 21 thru 24)	X	1
2	C042-1	Stabilizer – Upper Vertical (does not include items 13, 14, and 16)	X	1
3	C130-9	Spacer	X	8
4	NAS6604-6	Bolt	X	8
5	C044-1*	Stabilizer – Horizontal (Includes items 17, 19, 20, 28 and 38; does not include item 18.)	X	1
6	NAS6606-47	Bolt (or NAS6606-48)	X	2
7	NAS1149F0632P	Washer	X	2
8	C023-21, -24, -34, -35	Tailcone Assembly (Ref; see Figure 53-21.)		
9	NAS1149F0663P	Washer (under nut, as required to meet torque requirements per R66 MM § 20-30 Part E.)	X	A/R
10	D210-6	Nut	X	2
11	B330-19	Palnut	X	2
12	C148	Bulkhead (Ref)		
13	A130-14	Spacer	X	1
14	MS20470AD4	Rivet	X	4
15	MS35206-228	Screw	X	1
16	C554-2	Clip – Upper Vertical Stabilizer	X	1
17	C529-1	Mount Assembly – Tail Light	X	1
18	01-0771554-01**	Light Assembly – Tail Light (Ref; see Figure 33-3)		
19	NAS1919B04S02	Rivet	X	3
20	MS20470AD4	Rivet (or NAS1919B04S02, optional)	X	2
21	C554-1	Clip – Lower Vertical Stabilizer	X	1
22	NAS1149FN616P	Washer	X	1
23	MS21042L06	Nut	X	1
24	C043-1	Stabilizer – Lower Vertical (does not include item 21)	X	1
25	C004-3*	Empennage Assembly (Float ships. Includes items 2 thru 4, 13 thru 16, 21 thru 24, and 26.)	X	1
26	C044-2*	Stabilizer – Horizontal (Float ships. Includes items 17, 19, 20, 27, 28, and 38.)	X	1
27	D298-1	Plate (seal all around plate in joint, where plate attaches to stabilizer using item 28)	X	1
28	B270-1	Sealant	X	A/R
29	NAS9302B-4-02	Rivet	X	6
30	MS21042L08	Nut	X	2

NOTES * May not be installed if F955-1 bracket is installed on tailcone see Figures 53-17 & 53-21.

** Whelen part number.

Continues

FIGURE AND INDEX NUMBER	PART NUMBER	DESCRIPTION	PARTS AVAIL	QTY PER ASSY
		C004-2 & -3 EMPENNAGE ASSEMBLY (Cont'd)		
53-29-31	NAS1149FN816P	Washer	X	2
32	B161-2	Spirap	X	A/R
33	MS337-5-9	Ty-Rap	X	A/R
34	B264-13	Plug (Ref; see Figure 53-21)		
	B264-2	Socket (Ref)		
35	B264-12	Housing (Ref; see Figure 65-9)		
	B264-1	Pin (Ref)		
36	MS35489-4	Grommet	X	1
37	90295A075	Washer	X	1
38	D049-3	Wire Harness Assembly – Tail Light (Includes items 32, 36, 37, 39, 43, 45, and wires. No longer available, replaced by D049-8, also order item 48 as required.)	O	1
39	B263-13	Housing	X	1
	B263-2	Socket	X	2
40	MS21919WDG3	Clamp	X	1
41	MS27039C0806	Screw	X	2
42	B264-11	Plug (Ref; see Figure 53-21)		
	B264-2	Socket (Ref)		
43	B264-10	Receptacle	O	1
	B264-1	Pin	O	1
44	MS21919WDG2	Clamp	X	1
45	B260-3	Terminal	X	1
46	D079-1	Tail Rotor Guard Assembly (Ref; see Figure 53-25)		
47	C470-1	Tail Skid (Ref; see Figure 53-25)		
		* * *		
48	KI-276	R44-series and R66 B264-XX Connector Upgrade Kit Instructions (Replaces obsoleted B264-XX connectors with B263-XX connectors on: C049-1 tail rotor seal chip detector harness assembly, C023 tailcone aft wire harness, and tail light wire on C044 horizontal stabilizer harness.)	X	A/R

NOTES

Intentionally Blank

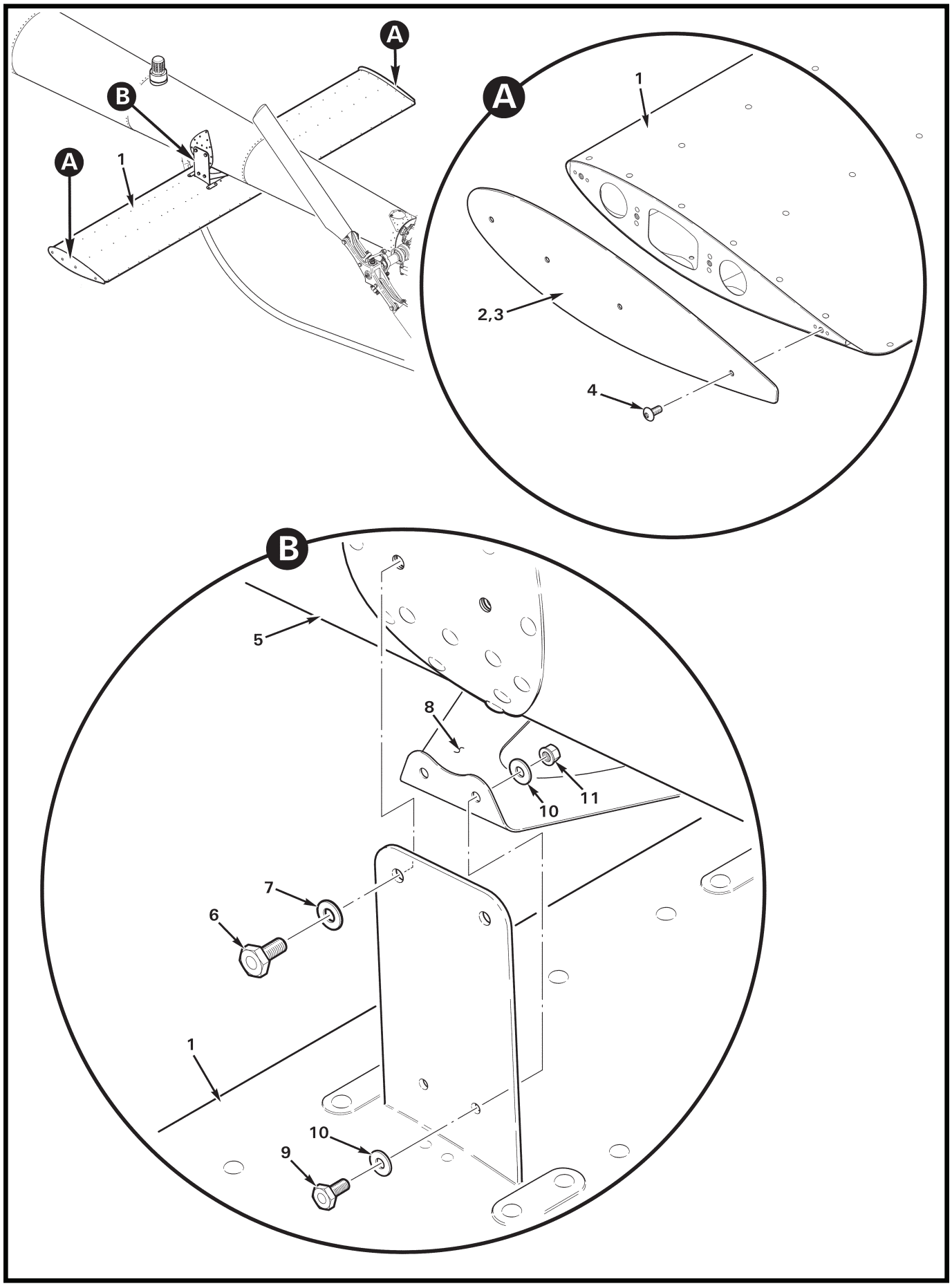
A
B
A
1
A
1
2,3
4
B
5
8
10
11
7
6
1
10
9

FIGURE AND INDEX NUMBER	PART NUMBER	DESCRIPTION	PARTS AVAIL	QTY PER ASSY
		F050-2 HORIZONTAL STABILIZER INSTALLATION		
53-33-1	F050-2	Horizontal Stabilizer Assembly (Incl items 2 thru 4)	X	1
2	F953-2	Plate (seal all around plate in joint where plate attaches to stabilizer using item 3)	X	2
3	B270-1	Sealant	X	A/R
4	B526-66	Screw (do not substitute)	X	8
5	C023-21, -34, -35*	Tailcone Assembly (Ref)		
6	NAS6604-3*	Bolt (Ref)		
7	NAS1149F0432P*	Washer (Ref)		
8	F955-1*	Bracket (Ref)		
	F955-6*	Bracket (Ref)		
9	NAS6603-2*	Bolt (Ref)		
10	NAS1149F0332P*	Washer (Ref)		
11	D210-3*	Nut (Ref)		
		* * *		
12	MT023-2	Support (Temporarily installed to support item 8 when item 1 is not installed.)	X	2

NOTES * See Figures 53-17 & 53-21.

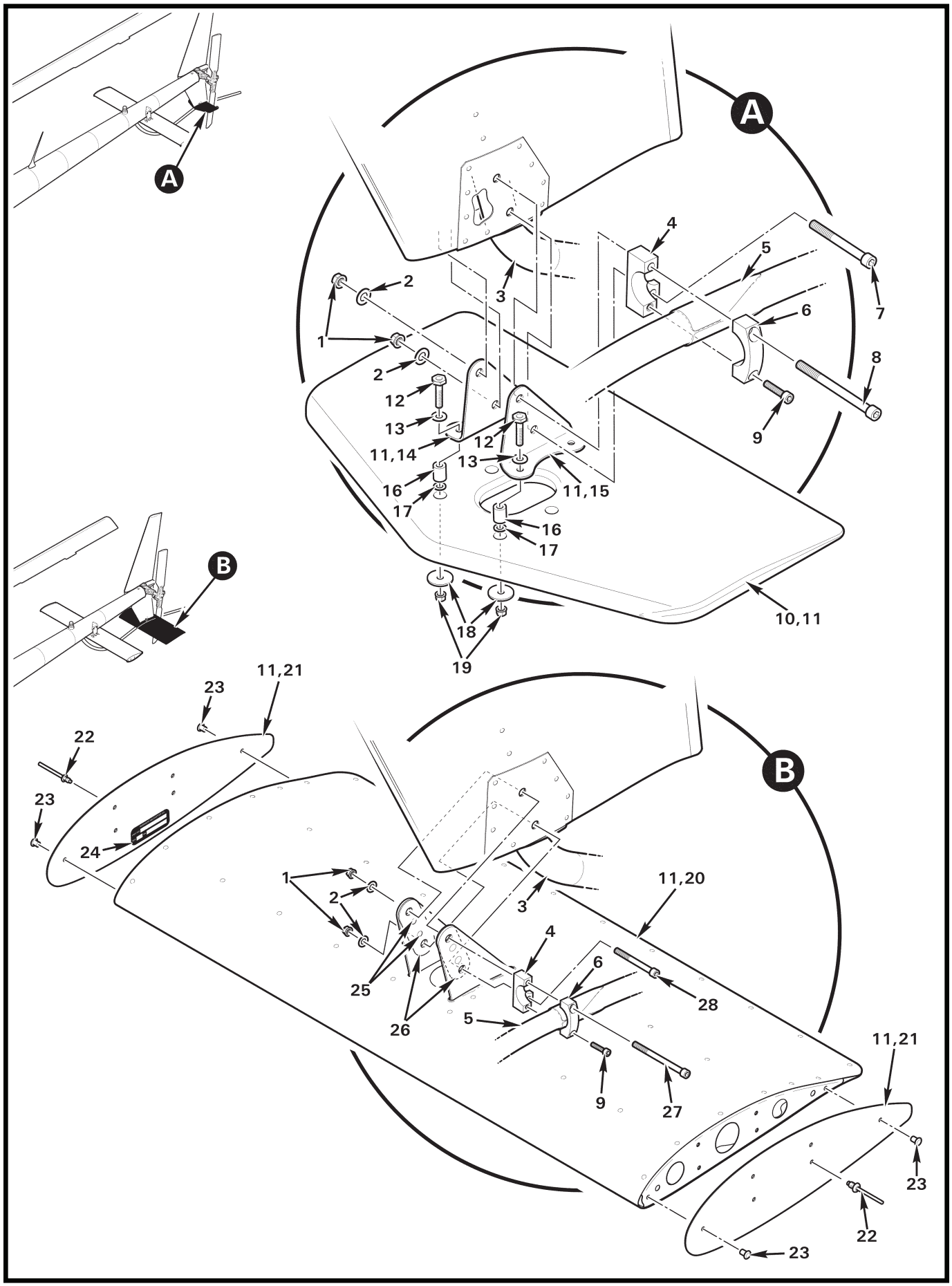
A
A
4
5
2
3
7
6
1
2
8
12
13
9
12
11,14
13
11,15
16
17
16
17
10,11
B
18
19
11,21
23
22
23
24
B
1
2
11,20
3
4
6
25
28
26
5
11,21
9
27
23
22
23

FIGURE AND INDEX NUMBER	PART NUMBER	DESCRIPTION	PARTS AVAIL	QTY PER ASSY
		C050-2/G950-2 STABILIZER INSTALLATION		
53-35-1	D210-4	Nut	X	2
2	NAS1149F0432P	Washer	X	2
3	C470-1	Tail Skid (Ref, see Figure 53-25)		
4	D081-4	Block Assembly	X	1
5	D079-1	Tail Rotor Guard (Ref)		
6	D081-2	Block – Cap	X	1
7	NAS1351-4-38P	Screw	X	1
8	NAS1351-4-53P	Screw	X	1
9	NAS1352-3-14P	Screw	X	1
10	C050-2	Stabilizer Assembly	X	1
11	B270-1	Sealant (applied around stabilizer bracket edges, between brackets and C716 doubler; 2-oz tube)	X	A/R
12	NAS6603-9	Bolt	X	4
13	NAS1149F0332P	Washer	X	4
14	C971-4	Bracket (install using item 11 around edges)	X	1
15	C971-3	Bracket (install using item 11 around edges)	X	1
16	A130-35	Spacer	X	4
17	NAS620-10L*	Washer	X	A/R
18	A141-18	Washer	X	4
19	MS21042L3	Nut	X	4
20	G950-2	Stabilizer Assembly – Pop-out Floats (Incl items 11, 21 and 22)	X	1
21	G952-3	Plate	X	2
22	NAS9302B-4-02	Rivet	X	8
23	MS20426AD4	Rivet	X	4
24	A651-1	Data Plate	O	1
25	NAS1097AD3	Rivet (install with head inboard, bucked end flush or recessed 0.110-in. dia. min)	X	4
26	G953-15	Spacer	X	2
27	NAS1351-4-56P	Screw	X	1
28	NAS1351-4-40P	Screw	X	1
		***		
29	KI-267-1**	R66 Float Stabilizer Installation Upgrade Kit Instructions (upgrades G950-2 Float Stabilizer Revision C to Revision E; refer to R66 SB-33)	X	A/R
30	KI-267-2**	R66 Float Stabilizer Installation Kit Instructions (replaces G950-1 Float Stabilizer with G950-2 Stabilizer Revision E; refer to R66 SB-33)	X	A/R

NOTES * Install under item 18, (4 places) if stabilizer is more than 0.015-inch thicker than spacer length.

** See https://robinsonheli.com for kit contents and instructions.

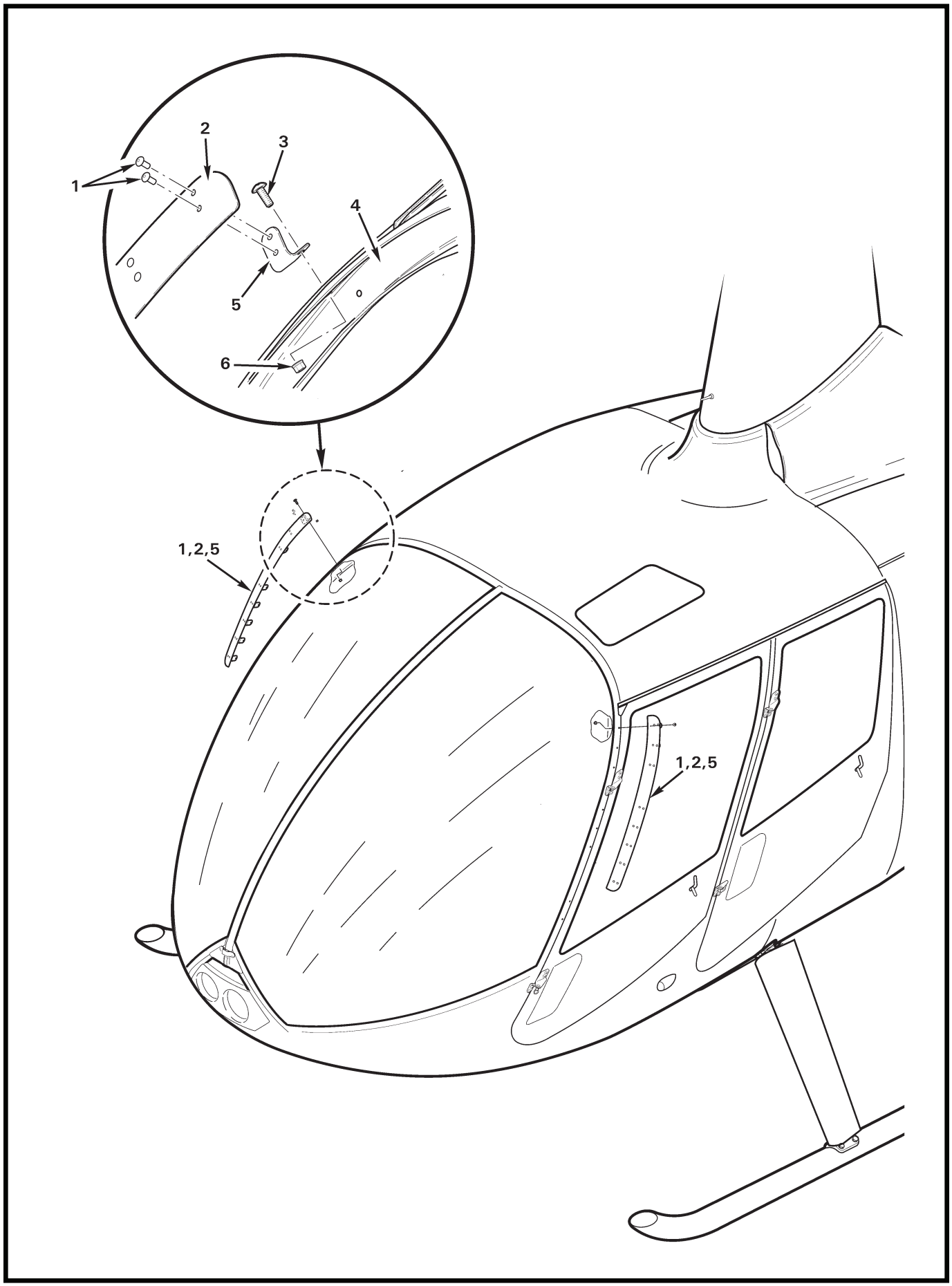
1
2
3
4
5
6
1,2,5
1,2,5

FIGURE AND INDEX NUMBER	PART NUMBER	DESCRIPTION	PARTS AVAIL	QTY PER ASSY
		WIND DEFLECTOR INSTALLATION		
53-37-1	MS20470AD4	Rivet	X	32
2	B228-1	Deflector (LH or RH)	X	2
3	AN526C832R8	Screw	X	16
4	—	Door Jamb (Ref)		
5	B228-2	Angle	X	16
6	MS21042L08	Nut	X	16

NOTES

Intentionally Blank

CHAPTER 62

MAIN ROTOR

Figure	*Title*	*Page*
62-1	Main Rotor Blade Assembly	62.0
62-3	Main Rotor Hub	62.2

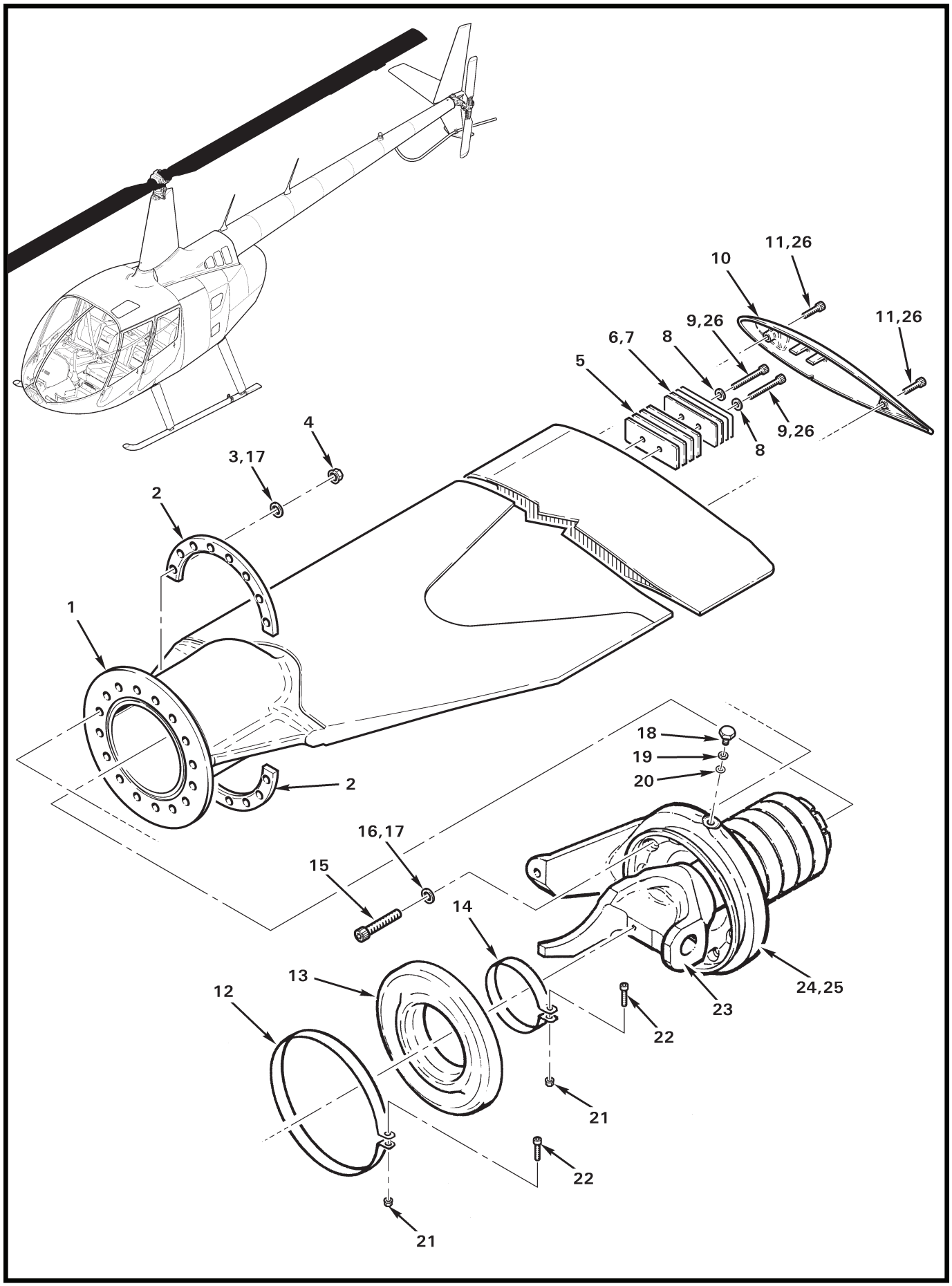

FIGURE 62-1 MAIN ROTOR BLADE ASSEMBLY

FIGURE AND INDEX NUMBER	PART NUMBER	DESCRIPTION	PARTS AVAIL	QTY PER ASSY
		MAIN ROTOR BLADE ASSEMBLY*		
62-1-1	C005-13	Main Rotor Blade and Spindle Assembly – Extended Tab (Incl items 2 thru 4, 15 thru 18, 24, and 25)	X	2
	C005-13R	Main Rotor Blade and Spindle Assembly (Two blade set, overhaul exchange; R9648 core deposit req'd. Includes shipping crate.)	X	1
	F016-2**	Blade Assembly	O	1
2	C253-2	Spacer	O	2
3	NAS1149F0563P	Washer	X	16
4	D210-5	Nut	X	16
5	C298-4	Balance Strip (0.125 in. thick steel)	X	A/R
6	C298-2	Balance Strip (0.040 in. thick steel)	X	A/R
7	C298-3	Balance Strip (0.032 in. thick steel)	X	A/R
8	NAS1149F0332P	Washer (or NAS1149F0363P A/R for balance)	X	A/R
9	A722-4	Screw (installed wet using item 26; see MM for special torque)	X	2
10	F300-1	Tip Cover (round)	X	1
11	NAS1351N3-12P	Screw (installed wet using item 26; see MM for special torque)	X	2
12	C165-2	Clamp Assembly (Incl items 21 and 22)	X	1
13	C156-1	Boot (standard, black)	X	1
	C156-2	Boot (optional for sub-freezing operations, gray)	X	1
14	C165-1	Clamp Assembly (Incl items 21 and 22)	X	1
15	C722-1	Screw	O	16
16	NAS1149F0563P	Washer	X	16
17	B270-1	Sealant (2-oz. tube)	X	A/R
18	B289-2	Bolt (Incl items 19 and 20)	X	2
19	—	Washer	O	2
20	A215-902	O-Ring	X	1
21	MS21042L08	Nut	X	2
22	NAS1352-08-12P	Screw	X	2
23	C158-1	Spindle (Ref)		
24	C005-14	Spindle Assembly (Incl items 12 thru 14, and 23)	O	1
25	A257-4	Oil (to fill blade housing)	X	A/R
26	A257-9	Anti-seize	X	A/R

NOTES * See Figure 99-21 for shipping crate.
** Critical part; see R66 MM § 1-60.

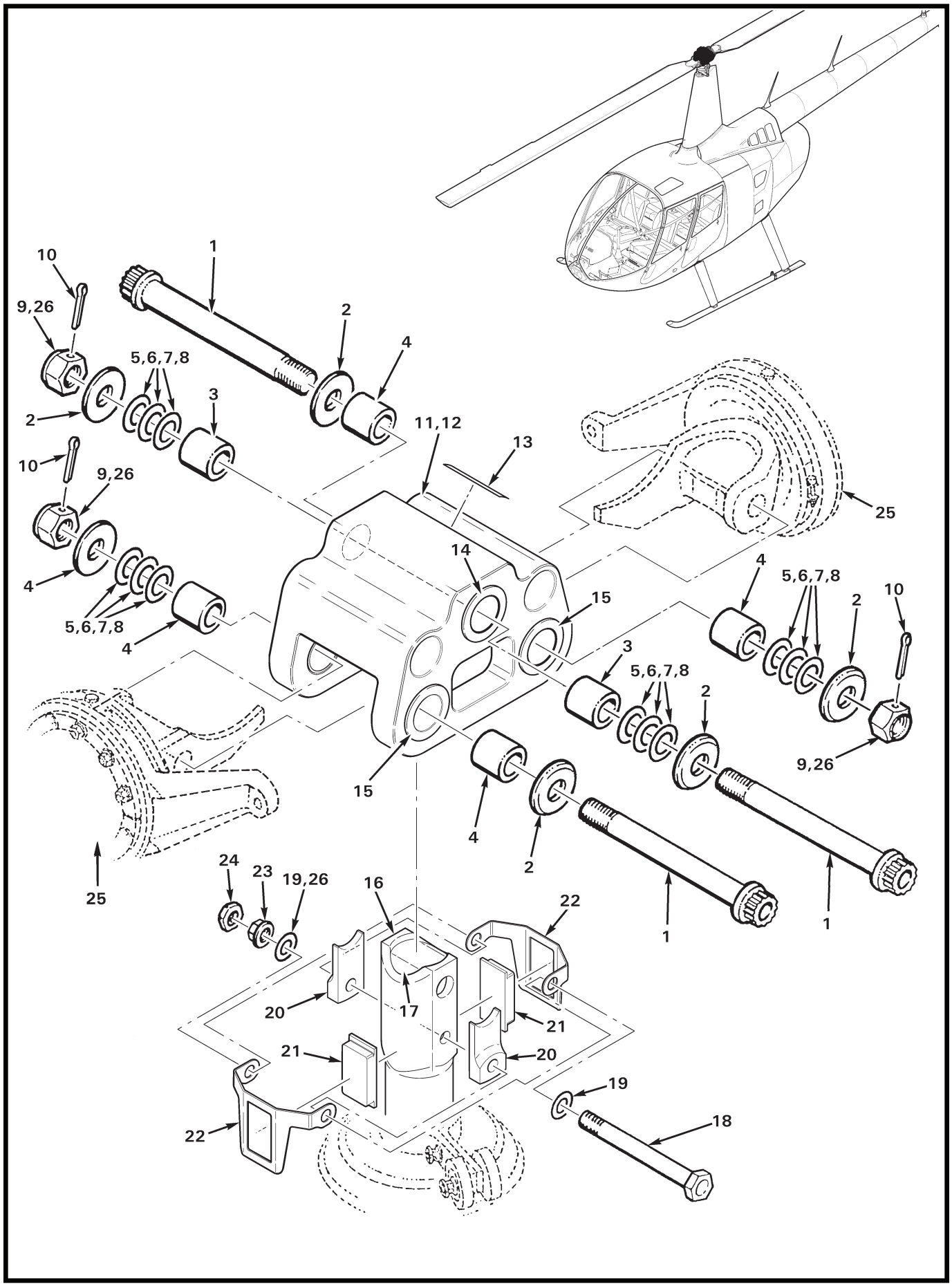
1
2
3
4
5,6,7,8
9,26
10
11,12
13
14
15
16
17
18
19
19,26
20
21
22
23
24
25

FIGURE AND INDEX NUMBER	PART NUMBER	DESCRIPTION	PARTS AVAIL	QTY PER ASSY
		MAIN ROTOR HUB		
62-3-1	NAS634-105	Bolt (install using item 26 on threads)	X	3
2	C152-1	Thrust Washer	X	6
3	C106-5	Journal-Bearing (length = 1.775 in.)	X	2
4	C106-7	Journal-Bearing (length = 1.284 in.)	X	4
5	C117-8	Shim-Washer (thickness = 0.012 in.)	X	A/R
6	C117-9	Shim-Washer (thickness = 0.015 in.)	X	A/R
7	C117-10	Shim-Washer (thickness = 0.020 in.)	X	A/R
8	C117-11	Shim-Washer (thickness = 0.025 in.)	X	A/R
9	C189-14	Nut	X	3
10	MS24665-441	Cotter Pin	X	3
11	C005-4	Hub Assembly (Incl items 12 thru 15)	X	1
12	C154-1	Hub (Ref, does not include C648 bearings)		
13	A654-18	Decal "LEVEL HERE"	X	1
14	C648-3*	Bearing (teeter)	X	2
15	C648-1*	Bearing (coning)	X	4
16	C251-3	Shaft – Main Rotor (Ref; see Figure 63-3)		
17	C252-1	Spacer – Main Rotor Hub (Ref)		
18	NAS6608-60	Bolt	X	1
19	NAS1149F0832P	Washer	X	2
20	C150-1	Droop Stop	X	2
21	D151-2	Stop (Replaces D151-1. Use only with D226-2 bracket.)	X	2
22	D226-2	Bracket (Replaces D226-1. Use only with D151-2 stop.)	X	2
23	D210-8	Nut (install using item 26 on threads)	X	1
24	B330-24	Palnut	X	1
25	C005-13	Blade and Spindle Assembly (Ref, see Figure 62-1)		
26	A257-9	Anti-seize	X	A/R

NOTES * Requires MT329-6 and MT643-1 tools for bearing replacement.

Intentionally Blank

CHAPTER 63

MAIN ROTOR DRIVE SYSTEM

Figure	*Title*	*Page*
63-1	Engine Shaft Weldment & Clutch Assembly	63.0
63-3	Main Rotor Gearbox & Mast Assembly	63.2
63-7	Main Rotor Gearbox & Mast Installation	63.6
63-9	Rotor Brake Assembly	63.8
63-13	Main Rotor Gearbox – Oil System	63.12
63-15	Main Rotor Gearbox – Oil Cooler Installation	63.14

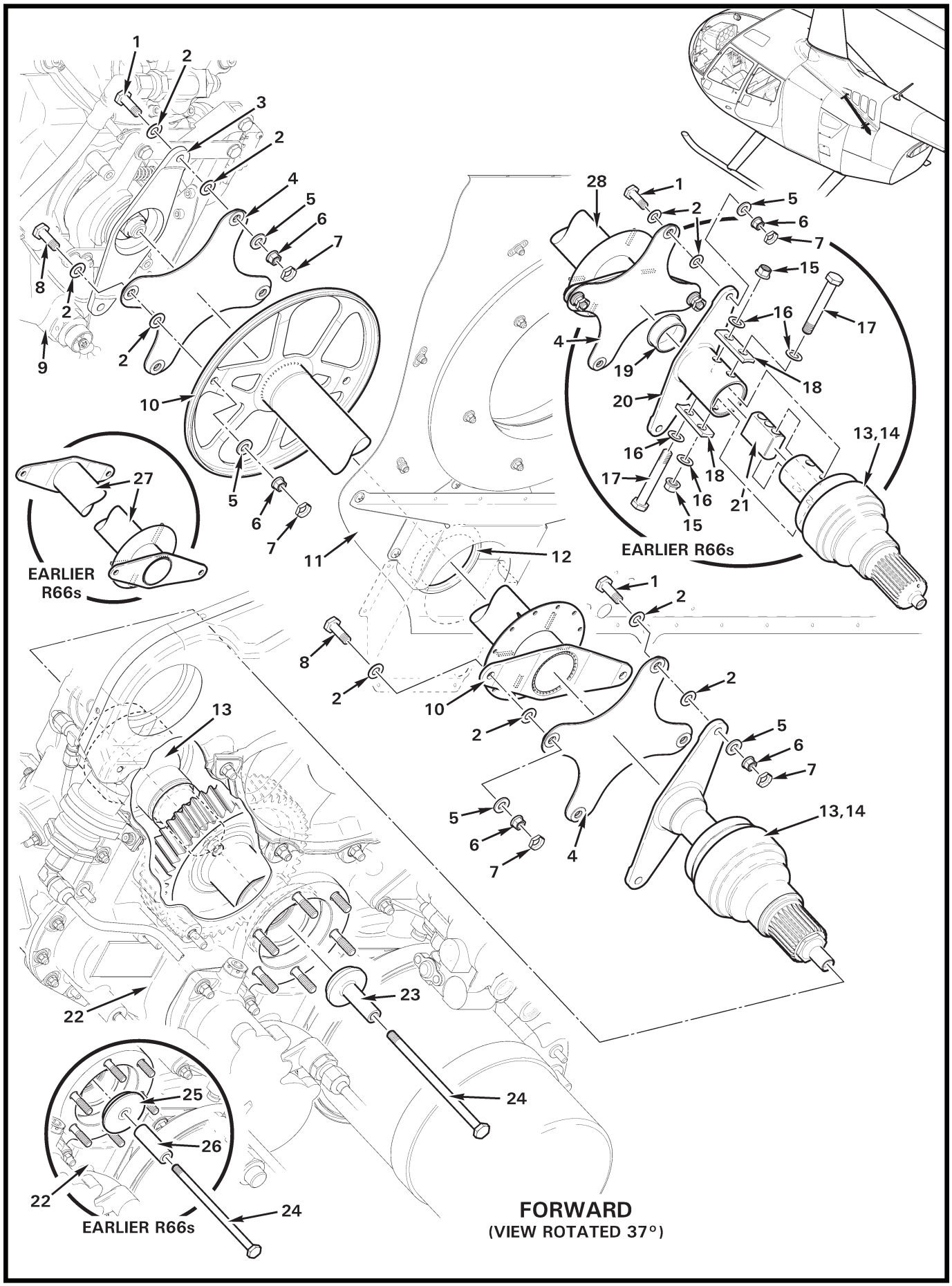
1
2
3
2
4
5
6
7
8
2
9
2
10
5
6
7
11
27
EARLIER
R66s
12
28
1
2
5
6
7
15
16
17
4
19
18
20
16
18
17
16
15
21
13,14
EARLIER R66s
1
2
8
2
10
2
2
5
6
7
13
5
6
7
4
13,14
22
23
24
25
26
22
24
EARLIER R66s
FORWARD
(VIEW ROTATED 37°)

FIGURE AND INDEX NUMBER	PART NUMBER	DESCRIPTION	PARTS AVAIL	QTY PER ASSY
		ENGINE SHAFT WELDMENT & CLUTCH ASSEMBLY		
63-1-1	NAS6604-6	Bolt	X	4
2	NAS1149F0432P	Washer (or NAS1149F0463P washer; see R66 Maintenance Manual for shimming requirements)	X	16
3	F910-1	Yoke (ref, see Figure 63-3)		
4	A947-2	Flex Plate Assembly (revision H or subsequent)	X	2
5	NAS1149F0463P	Washer (or NAS1149F0432P washer; see R66 Maintenance Manual for shimming requirements)	X	8
6	D210-4	Nut	X	8
7	B330-13	Stamped Nut	X	8
8	NAS6604-5	Bolt	X	4
9	F006-1	Main Rotor Gearbox Assembly (ref; see Figure 63-3)		
10	F642-7	Shaft Assembly (rev. H and subsequent)	X	1
11	F234-1	Firewall (ref)		
12	NAS557-32A	Grommet	X	1
13	F018-1	Clutch Assembly (coat splines and clamping face with item 14 at installation)	X	1
	F018-1	Clutch Assembly (rev. C and prior include items 15 thru 21; coat splines and clamping face with item 14 at installation)	X	1
14	A257-1	Lubricant (also A257-9 or A257-12)	X	A/R
15	MS21042L5	Nut	X	2
16	NAS1149F0532P	Washer	X	4
17	NAS6605-26	Bolt	X	2
18	A191-1	Block	X	2
19	B278-2	Plug	X	1
20	F906-1	Yoke (install using wet primer)	X	1
21	A553-1	Block	X	1
22	F145-1	Engine (ref)		
23	G732-3	Cap	X	1
24	G732-4	Bolt (supersedes NAS6604-67 bolt in this installation)	X	1
	NAS6604-67	Bolt (earlier helicopters)	O	1
25	G732-2	Cap	O	1
26	C130-62	Spacer	O	1
27	F642-1	Shaft Weldment (ref; rev. A thru D, no longer available)		
28	F642-6	Shaft Weldment (rev. E thru G, no longer available)	O	1

NOTES

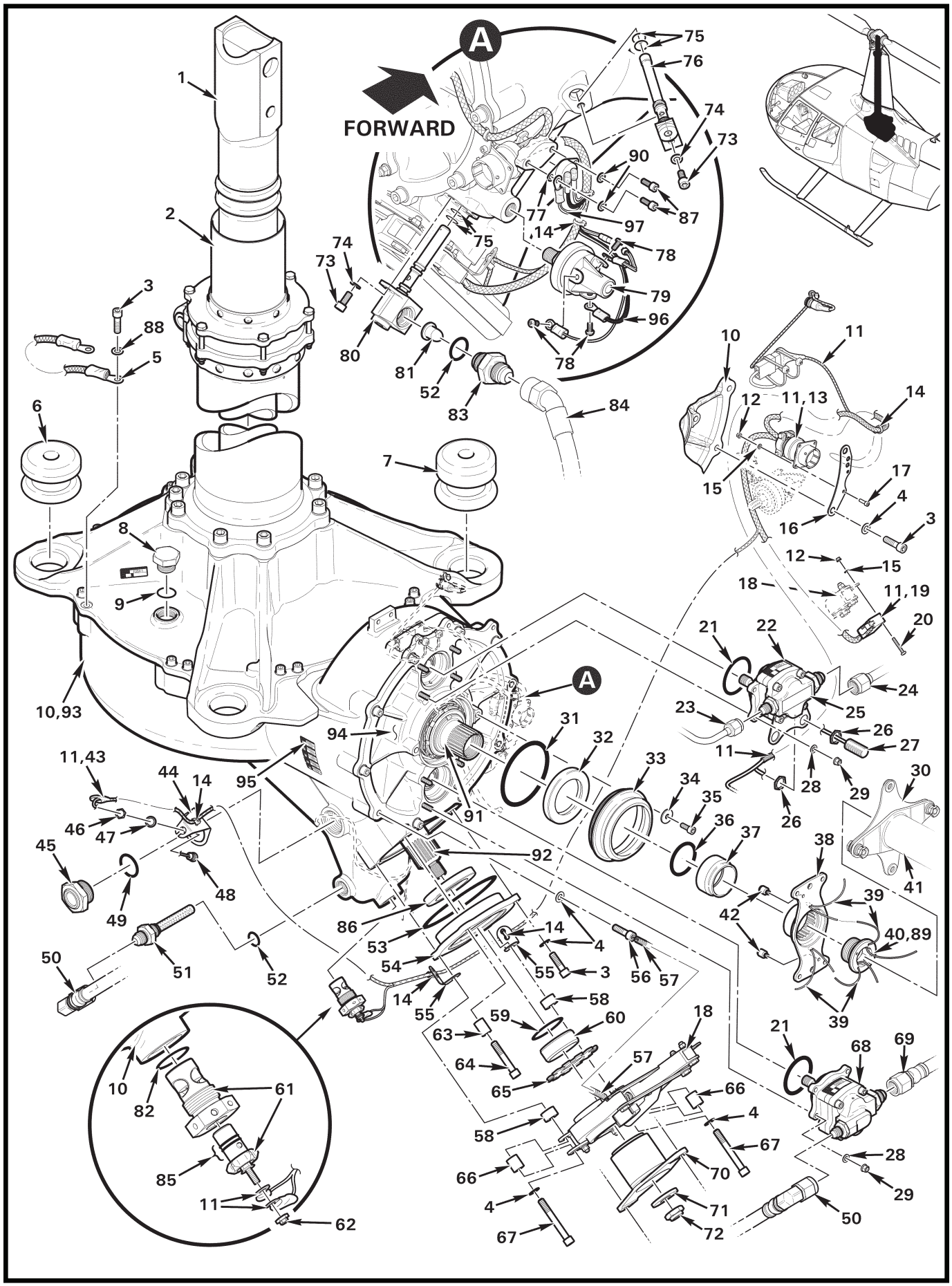
FORWARD
A
1
2
3
4
5
6
7
8
9
10
10,93
11
11,13
11,19
11,43
12
14
15
16
17
18
20
21
22
23
24
25
26
27
28
29
30
31
32
33
34
35
36
37
38
39
40,89
41
42
44
45
46
47
48
49
50
51
52
53
54
55
56
57
58
59
60
61
62
63
64
65
66
67
68
69
70
71
72
73
74
75
76
77
78
79
80
81
82
83
84
85
86
87
88
90
91
92
94
95
96
97

FIGURE AND INDEX NUMBER	PART NUMBER	DESCRIPTION	PARTS AVAIL	QTY PER ASSY
		MAIN ROTOR GEARBOX & MAST ASSEMBLY		
63-3-1	C251-3	Shaft – Main Rotor Drive	O	1
2	C284-1	Tube Assembly	X	1
3	NAS1352-4-14	Screw	X	4
4	NAS620-416L	Washer	X	9
5	A936-2	Wire Assembly	X	1
6	A653-2*	Mount (fwd)	X	2
7	C653-3*	Mount (aft)	X	2
8	AN814-8D	Plug	X	1
9	A215-017	O-Ring	X	1
10	F006-1**	Main Rotor Gearbox Assembly (Incl items 1 thru 9, 11, 12, 14 thru 18, 21, 22, 25, 28, 29, 31 thru 38, 40, 44, 45, 49 thru 56, 58 thru 61, 63 thru 68, 70 thru 76, 79, 80, 82, and 86 thru 90. Includes rotor brake, yoke, slider tube, and hydraulic pump. See item 95.)	X	1
	F006-6**	Main Rotor Gearbox Assembly (Incl items 1, 3 thru 9, 21, 28, 29, 31 thru 37, 45, 49, 51 thru 56, 59 thru 61, 73 thru 76, 80, 82, and 86 thru 90. Does not include rotor brake, yoke, slider tube, or hydraulic pump.)	X	1
11	F049-01	Harness Assembly (Incl items 13, 19, 26, 27, 43, 46 thru 48, and 77 thru 81)	X	1
12	MS21042L04	Nut	X	4
13	MS3120F14-19P	Receptacle (orient large notch at top)	X	1
14	MS3367-4-9	Ty-Rap	X	A/R
15	NAS620-4	Washer	X	6
16	D114-4	Bracket	X	1
17	NAS1352-04-6P	Screw	X	2
18	G033-1	Rotor Brake Assembly (see Figure 63-9)	X	1
19	D2VW-5-1MS	Switch (rotor brake light)	X	1
20	MS35206-219	Screw	X	2
21	A215-128	O-Ring	X	2
22	D500-2	Pump Assembly (hydraulic)	X	1
23	F902-1	Line Assembly (Ref, see Figure 29-3)		
24	F902-2	Line Assembly (Ref, see Figure 29-3)		
25	F110-4	Telatemp (temperature recorder, 220° – 270° F)	X	1
26	—	Nut	O	4
27	103SR13A-3	Sender	X	2
28	NAS620-10L	Washer	X	8
29	D210-3	Nut	X	8
30	C947-3	Flex Plate Assembly (Ref)		
31	A215-149	O-Ring	X	1
32	C966-8	Seal	X	1

NOTES * Press in using water or A257-8 lube.

** Overhaul/exchange components are available, add "R" to the end of the part number.

Continues

FIGURE AND INDEX NUMBER	PART NUMBER	DESCRIPTION	PARTS AVAIL	QTY PER ASSY
		MAIN ROTOR GEARBOX & MAST ASSEMBLY (Cont'd)		
63-3-33	F254-1	Cover	X	1
34	A141-17	Washer	X	2
35	NAS1352-3-8	Screw	X	2
36	A215-027	O-Ring	X	1
37	F266-1	Spacer	X	1
38	F908-1	Yoke Assembly (Incl item 42)	X	1
39	MS20995C20	0.020 in. dia Safety Wire	X	2
40	F904-1	Plug (secured in two places with item 39)	X	1
41	F196-1	Shaft Weldment (Ref)		
42	B570-1	Magnet	X	2
43	B158-6	Heat Shrink	X	A/R
44	D494-2	Holder	X	1
45	B563-2	Sight Gage	X	1
46	—	Nut	O	1
47	—	Washer	O	1
48	252-247	Light Assembly (LED; includes items 46 and 47)	O	1
49	A215-020	O-Ring	X	1
50	D205-25	Hose Assembly	X	1
51	B254-3	Strainer	X	1
52	MS28778-6	Packing (o-ring)	X	2
53	A215-152	O-Ring	X	1
54	F255-3	Cover Assembly	X	1
55	D114-5	Bracket	X	2
56	NAS1352-4H14	Screw	X	1
57	B774-3	Spring (Rev I and prior)	X	1
58	C130-3	Spacer	X	2
59	A215-025	O-Ring	X	1
60	F266-2	Spacer	X	1
61	B566-1	Chip Detector (Incl items 62 and 85)	X	1
62	—	Nut	O	1
63	C130-53	Spacer	X	1
64	NAS1352-4-24	Screw	X	1
65	F256-1	Shield	X	1
66	A130-41	Spacer	X	2
67	NAS1352-4-32	Screw	X	2
68	D500-3	Pump Assembly (Oil)	X	1

NOTES

Continues

FIGURE AND INDEX NUMBER	PART NUMBER	DESCRIPTION	PARTS AVAIL	QTY PER ASSY
		MAIN ROTOR GEARBOX & MAST ASSEMBLY (Cont'd)		
63-3-69	D205-19	Hose Assembly (Ref, see Figure 63-13)		
70	F910-1	Yoke	X	1
71	A141-10	Washer	X	1
72	MS21245L8	Nut	X	1
73	NAS1352-08-6P	Screw	X	3
74	NAS620-8	Washer	X	3
75	A215-009	O-Ring	X	4
76	F267-2	Nozzle Assembly	X	1
77	A688-1	Switch (MRGB temperature)	X	1
78	—	Screw (supplied with item 79)	O	3
79	B426-3	Switch (MRGB oil pressure)	X	1
80	F267-1	Nozzle Assembly (Incl items 81 thru 83)	X	1
81	FSJA5000080A	Screen	X	1
82	MS28778-8	Packing (o-ring)	X	1
83	D319-2	Fitting	X	1
84	D205-20	Hose Assembly (Ref, see Figure 63-13)		
85	012C	O-Ring	X	2
86	C966-10	Seal (Install per MM § 63-21 Part D using MT642-4 seal pressing tool. Also replace item 60.)	X	1
87	NAS1352-06-6P	Screw	X	2
88	NAS1149F0463P	Washer	X	1
89	A257-9	Anti-seize	X	A/R
90	NAS620-6	Washer	X	2
91	F146-1	Pinion Gear (power to TRGB; life limited component)	O	1
92	F143-1	Pinion Gear (power input from engine; life limited component)	O	1
93	F263-1	Housing – Main Rotor Gearbox (life limited component)	O	1
94	F270-1	Cartridge – Main Rotor Gearbox (life limited component)	O	1
95	— *	Identification Plate – F006-1 Assy (P/N, rev. letter, S/N)	O	1
	—	Identification Plate – F143-1 Pinion (P/N, rev. letter, S/N)	O	1
	—	Identification Plate – F146-1 Pinion (P/N, rev. letter, S/N)	O	1
	—	Identification Plate – F263-1 Housing (P/N, rev. letter, S/N)	O	1
	—	Identification Plate – C647-1 Bearing (P/N, rev. letter, S/N)	O	1
96	-1897	Wire (Ref; MRGB oil pressure switch ground)		
	-1901	Wire (Ref; MRGB Temperature Switch ground)		
97	-1897	Wire (Ref; MRGB oil pressure switch ground)		
	-630	Wire (Ref; hydraulic solenoid ground)		

NOTES * If modified per SL-11, rev. block will be "MOD -12".

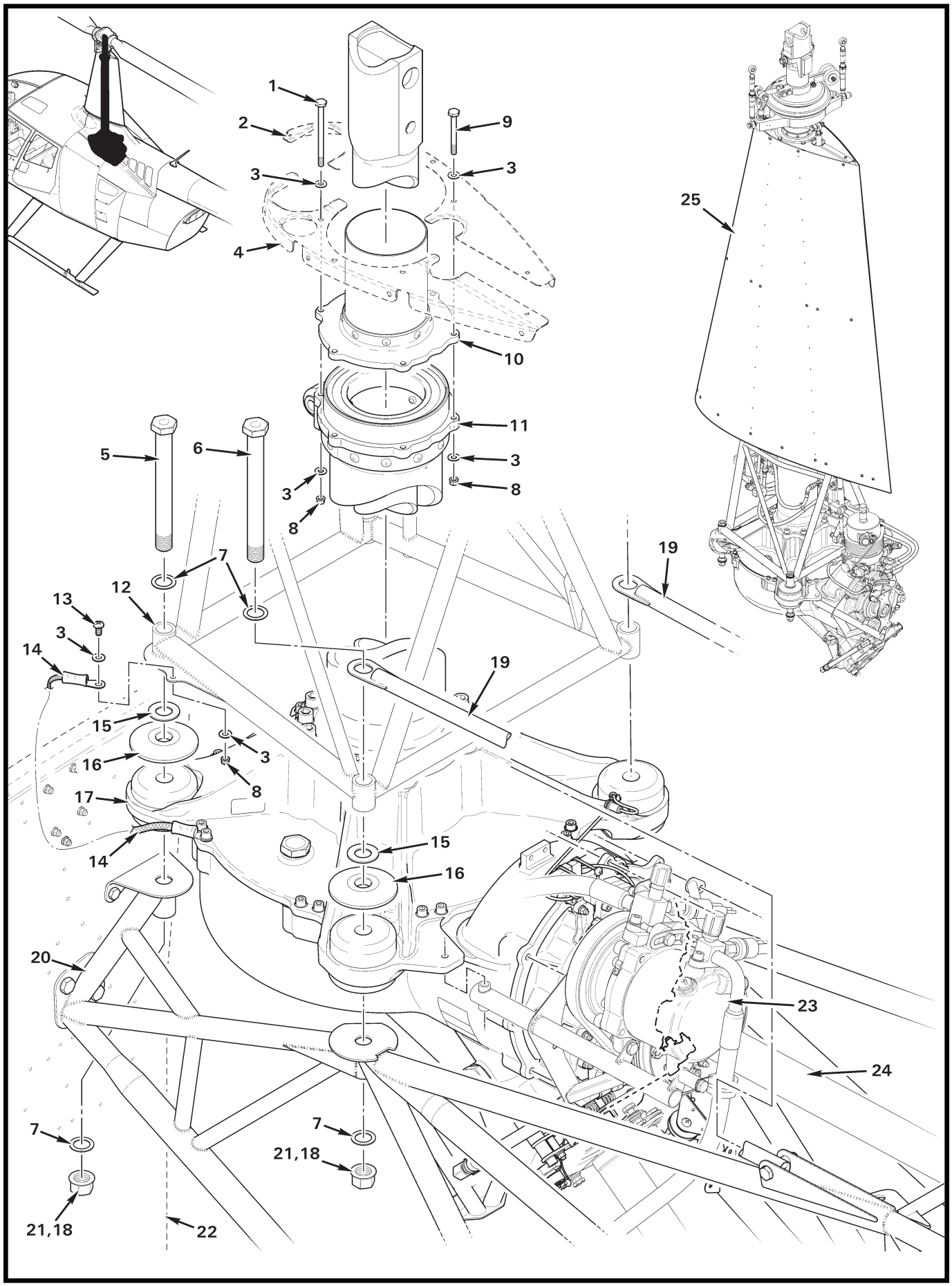
1
2
3
4
9
3
25
10
11
5
6
3
3
8
8
7
19
12
13
3
14
19
15
3
16
8
17
14
15
16
20
23
24
7
7
21,18
21,18
22

FIGURE AND INDEX NUMBER	PART NUMBER	DESCRIPTION	PARTS AVAIL	QTY PER ASSY
		MAIN ROTOR GEARBOX & MAST INSTALLATION		
63-7-1	NAS6603-40	Bolt	X	2
2	F261	Rib – Mast Fairing (Ref; see Fig. 53-3)		
3	NAS1149F0332P	Washer	X	14
4	F261	Rib – Mast Fairing (Ref; see Fig. 53-3)		
5	F650-1	Bolt (fwd mount)	X	2
6	F650-2	Bolt (aft mount)	X	2
7	A141-21	Washer	X	8
8	D210-3	Nut	X	7
9	NAS6603-24	Bolt	X	4
10	C284-1	Tube Assembly	X	1
11	C283-5	Mast Assembly	O	1
12	G201-1	Frame Weldment (Ref)		
13	MS27039C1-06	Screw	X	1
14	A936-2	Wire Assembly	X	1
15	NAS1149F1063P	Washer	X	4
16	A267-1	Washer	X	4
17	F006-1	Main Rotor Gearbox Assembly (Ref; see Figure 63-3)		
18	A257-9	Anti-seize	X	A/R
19	F235-13	Strut Assembly (Ref, see Figure 53-13A)		
20	F020-1	Upper Frame Assembly (Ref, see Figure 53-13A)		
21	D210-10	Nut (install using item 26 on threads)	X	4
22	F560-1	Cabin Bulkhead Assembly (Ref)		
23	G777-1	Compressor Assembly (Ref, see Figure 21-3)		
24	F196-1	Fan Shaft – Weldment (Ref, see Figure 65-1)		
25	F001-11	Main Rotor Gearbox Sub-Assembly (Includes items 2, 4, 17, B277-064, C017-5, D114-3, F022-1, MT608-1 plug assembly, and MT608-3 tag.)	X	1

NOTES

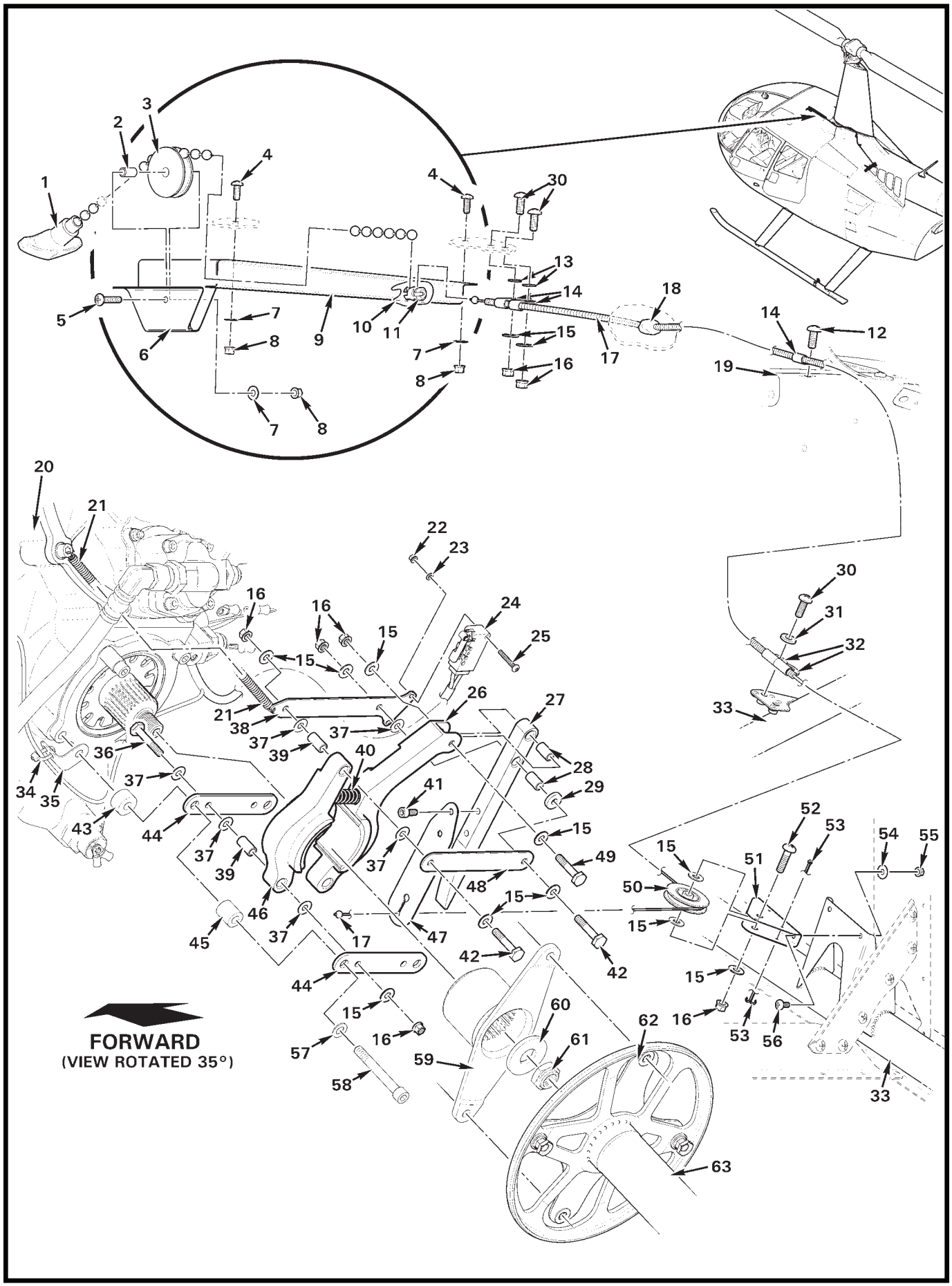

FIGURE 63-9 ROTOR BRAKE ASSEMBLY

FIGURE AND INDEX NUMBER	PART NUMBER	DESCRIPTION	PARTS AVAIL	QTY PER ASSY
		ROTOR BRAKE ASSEMBLY		
63-9-1	B033-6	Knob Assembly	X	1
2	A130-34	Spacer	X	1
3	BP4100	Pulley	X	1
4	AN526C832R6	Screw	X	2
5	MS27039C0812	Screw	X	1
6	D118-1	Bracket Assembly	X	1
7	NAS1149FN816P	Washer	X	3
8	MS21042L08	Nut	X	3
9	D117-2	Guard	X	1
10	B158-8	Heat Shrink	X	A/R
11	B125-2	Connector	X	1
12	MS27039C1-07	Screw	X	1
13	NAS620-10L	Washer	X	2
14	AN742-3	Clamp	X	3
15	NAS1149F0332P	Washer	X	13
16	D210-3	Nut	X	8
17	D126-2	Cable Assembly	X	1
18	B270-1	Sealant	X	A/R
19	F560-1	Cabin Bulkhead Assembly (Ref)		
20	F006-1	Main Rotor Gearbox (Ref; see Figure 63-3)		
21	B774-3	Spring (Ref; rev. I and prior)		
22	MS21042L04	Nut (Ref)		
23	NAS620-4	Washer (Ref)		
24	D2VW-5-1MS	Switch (Ref)		
25	MS35206-219	Screw (Ref)		
26	G110-1	Arm Assembly	X	1
27	B112-2	Lever	X	1
28	A130-40	Spacer	X	2
29	A141-27	Washer	X	1
30	MS27039C1-08	Screw	X	4
31	NAS1149F0363P	Washer	X	2
32	MS21333-2	Clamp	X	2
33	F020-1	Upper Frame (Ref)		
34	MS3367-4-9	Ty-Rap (Ref)		
35	D114-5	Bracket (Ref)		

NOTES

Continues

FIGURE AND INDEX NUMBER	PART NUMBER	DESCRIPTION	PARTS AVAIL	QTY PER ASSY
		ROTOR BRAKE ASSEMBLY (Cont'd)		
63-9-36	NAS6603-12	Bolt	X	2
37	NAS1149D0316J	Washer	X	9
38	G113-2	Link	X	1
39	A130-39	Spacer	X	3
40	D774-4	Spring	X	1
41	NAS1352-08LE6P	Screw	X	2
42	NAS6603-11	Bolt	X	2
43	C130-3	Spacer (Ref)		
44	G111-1	Bar	X	2
45	A130-41	Spacer (Ref)		
46	G109-1	Arm Assembly	X	1
47	B112-3	Spring	X	1
48	G113-1	Link (rev. I and prior)	X	1
49	NAS6603-10	Bolt	X	1
50	MS24566-1B	Pulley	X	1
51	B157-1	Mount	X	1
52	MS27039C1-11	Screw	X	1
53	MS24665-134	Cotter Pin	X	2
54	NAS1149FN616P	Washer	X	2
55	MS21042L06	Nut	X	2
56	MS35206-227	Screw	X	2
57	NAS620-416L	Washer	X	2
58	NAS1352-4-32P	Screw	X	2
59	F910-1	Yoke (Ref, see Figure 63-3)		
60	A141-10	Washer (Ref)		
61	MS21245L8	Nut (Ref)		
62	A947-2	Flex Plate Assembly (Ref)		
63	F642-7	Shaft Weldment (Ref, see Figure 63-1)		

NOTES

Intentionally Blank

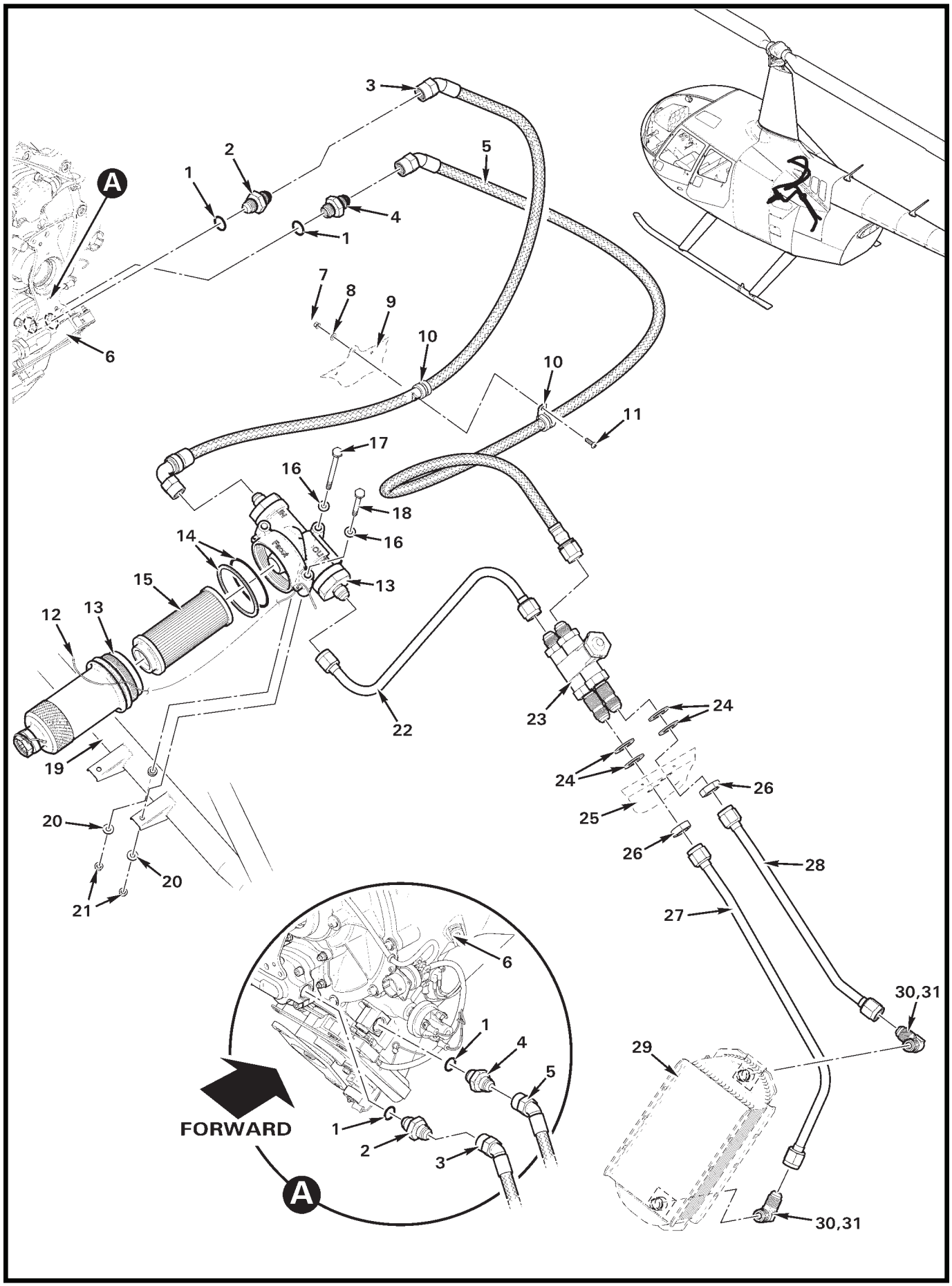
3
2
5
1
A
4
1
7
8
9
10
6
10
11
17
16
18
16
14
13
15
12
13
22
23
24
19
24
26
25
20
26
28
20
21
27
6
30,31
1
4
29
5
FORWARD
1
2
3
A
30,31

FIGURE AND INDEX NUMBER	PART NUMBER	DESCRIPTION	PARTS AVAIL	QTY PER ASSY
		MAIN ROTOR GEARBOX – OIL SYSTEM		
63-13-1	MS28778-6	Packing (o-ring)	X	1
2	AN815-6D	Union	X	1
3	D205-19	Hose Assembly	X	1
4	D319-2	Fitting	X	1
5	D205-20	Hose Assembly	X	1
6	F006-1	Main Rotor Gearbox Assembly (Ref; see Figure 63-3)		
7	MS21042L08	Nut	X	1
8	NAS1149FN816P	Washer	X	1
9	G233-1	Panel (Ref)		
10	MS21919WDG6	Clamp	X	2
11	MS27039C0807	Screw	X	1
12	MS20995C32	0.032 in. dia Safety Wire	X	A/R
13	F651-1	Oil Filter (Incl head assembly, bowl assembly, and items 14 and 15)	X	1
	1742161-10*	Head Assembly	O	1
	1740839*	Bowl Assembly	O	1
14	F651-3	Seal Kit (includes o-ring and backup ring)	X	1
15	F651-2	Filter Element	X	1
16	NAS1149F0332P	Washer	X	3
17	AN3-32A	Bolt	X	1
18	NAS6603-25	Bolt	X	2
19	F020-1	Frame Weldment (Ref)		
20	NAS1149F0363P	Washer	X	3
21	MS21042L3	Nut	X	3
22	F724-1	Line Assembly	X	1
23	F823-1	Thermostat Assembly	X	1
24	MS20002-9	Washer ([4] max at each of [2] unions)	X	A/R
25	F234-1	Firewall (Ref)		
26	AN924-8D	Nut	X	2
27	F274-2	Line Assembly	X	1
28	F724-3	Line Assembly	X	1
29	C649-4	Oil Cooler (main rotor gearbox, Ref)		
30	A880-666	Elbow (install using item 31)	X	2
31	B270-6	Sealant	X	A/R

NOTES * Purolator Facet Inc. part number.

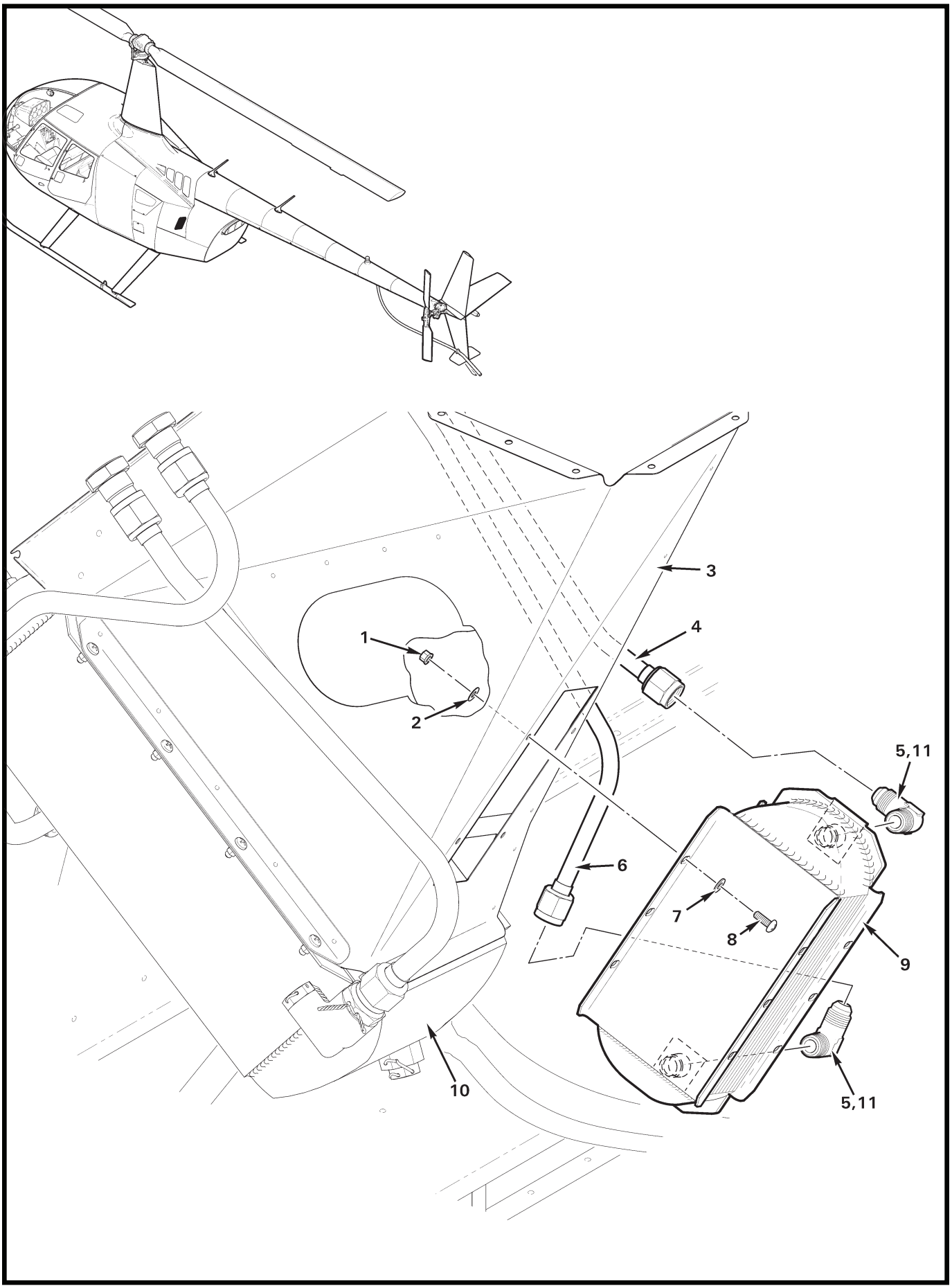
1
2
3
4
5,11
6
7
8
9
10
5,11

FIGURE AND INDEX NUMBER	PART NUMBER	DESCRIPTION	PARTS AVAIL	QTY PER ASSY
		MAIN ROTOR GEARBOX – OIL COOLER INSTALLATION		
63-15-1	MS21042L08	Nut	X	4
2	NAS1149FN816P	Washer	X	4
3	F309-1	Box Assembly (Ref)		
4	F724-3	Line Assembly (Ref)		
5	A880-666	Elbow (install using item 11)	X	2
6	F724-2	Line Assembly (Ref)		
7	NAS1149FN832P	Washer	X	4
8	MS27039C0806	Screw	X	4
9	C649-4	Oil Cooler (main rotor gearbox)	X	1
10	F649-1	Oil Cooler (Ref, engine)		
11	B270-6	Sealant	X	A/R

NOTES

Intentionally Blank

CHAPTER 64

TAIL ROTOR

Figure	*Title*	*Page*
64-1	Tail Rotor Assembly	64.0

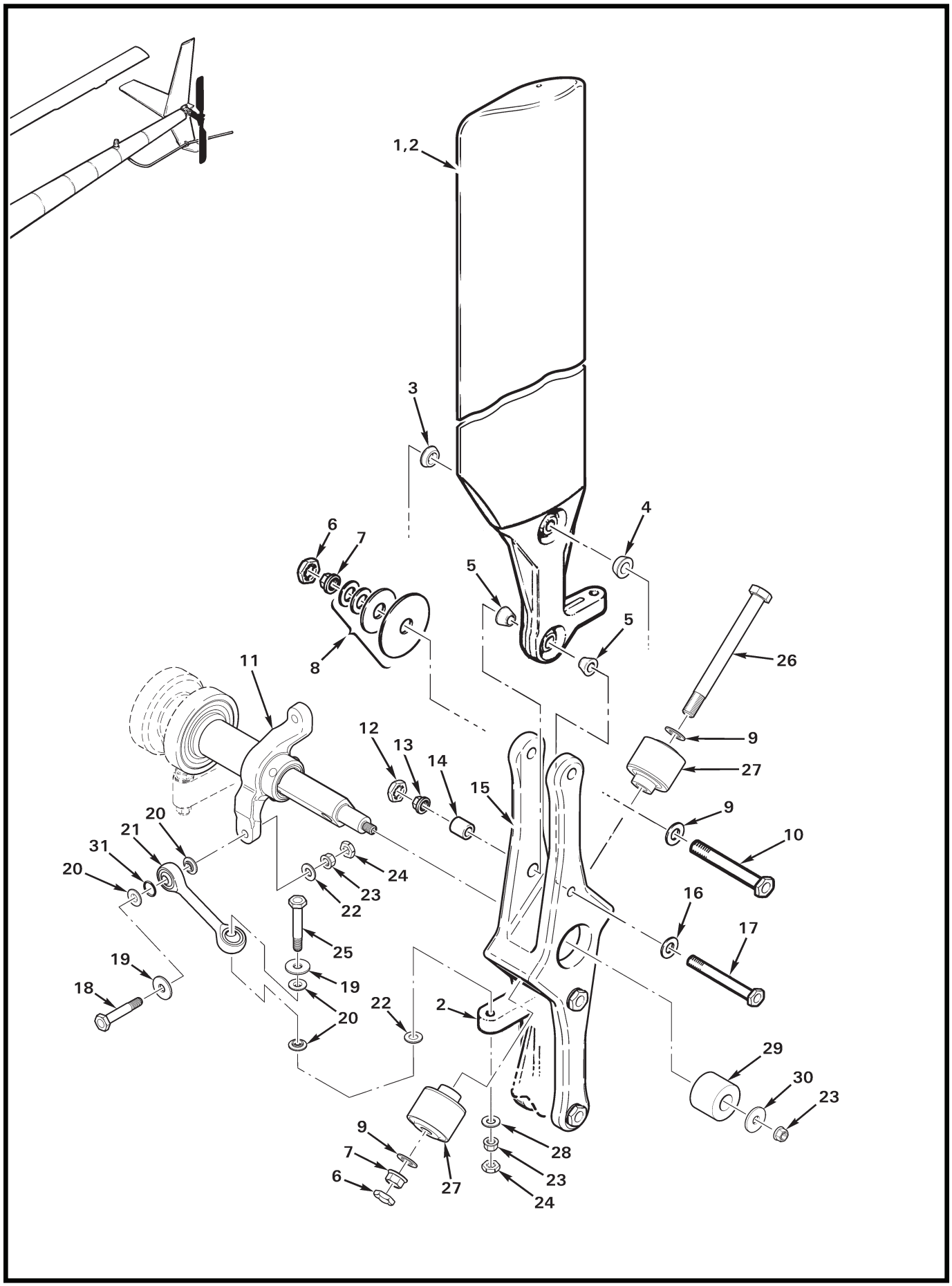
1,2
3
4
5
5
6
7
8
9
9
10
11
12
13
14
15
16
17
18
19
19
20
20
20
21
22
22
23
23
24
24
25
26
27
27
28
29
30
31
2

FIGURE AND INDEX NUMBER	PART NUMBER	DESCRIPTION	PARTS AVAIL	QTY PER ASSY
		TAIL ROTOR ASSEMBLY		
64-1-1	C008-10	Tail Rotor Assembly (Incl items 2, 3 thru 10, 12 thru 17, 24, 25, 28, and 31)	X	1
2	F029-1	Blade Assembly (critical part; see R66 MM § 1-60)	X	2
3	F137-1	Spacer	X	2
4	F137-2	Spacer	X	2
5	C137-1	Spacer	X	4
6	B330-19	Palnut	X	3
7	D210-6	Nut	X	3
8	NAS1149F0663P	Washer (or NAS1149F0632P, NAS1149D0632J, NAS1149D0663J, C141-23, or C141-24; any combination as required for balance; [4] required)	X	4
9	NAS1149F0632P	Washer	X	4
10	NAS6606-36	Bolt	X	2
11	C031-1	Pitch Control Assembly (Ref, see also Figure 65-9)		
12	B330-16	Palnut	X	2
13	D210-5	Nut	X	2
14	C138-2	Bushing	X	2
15	G062-1	Hub Assembly (Incl items 6 [1], 7 [1], 9, 26, and 27)	X	1
	G062-2	Hub	O	1
16	NAS1149F0532P	Washer	X	2
17	NAS6605-33	Bolt	X	2
18	NAS6604-16	Bolt	X	2
19	A214-3	Washer (under head)	X	4
20	A115-1	Spacer	X	8
21	B345-4**	Link	X	2
22	NAS1149F0432P	Washer	X	4
23	D210-4	Nut	X	5
24	B330-13	Palnut	X	4
25	NAS6604-17 to -22	Bolt (increase length to add washer weights)	X	2
26	NAS6606-53	Bolt	X	1
27	B361-2*	Bearing	X	2
28	NAS1149F0463P	Washer (or NAS1149F0432P, A141-14, NAS1149D0463J, NAS1149D0432J, or A214-3 as required for balance [1] min)	X	A/R
29	C119-2	Bumper (black)	X	1
30	A141-14	Washer	X	1
31	A215-012	O-ring (optional)	X	2

NOTES * MT556 tools required to install bearing. See MM Chapters 64 and 99.

** B345-4 tail rotor pitch link shaft can be different diameters (0.250 in. or 0.300 in.). Balance tail rotor per R66 MM § 18-20 if a different diameter pitch link is installed.

Continues

Intentionally Blank

CHAPTER 65

TAIL ROTOR DRIVE SYSTEM

Figure	*Title*	*Page*
65-1	Tail Rotor Drive Fan Shaft, Fanwheel, & Flex Plate Installation	65.0
65-3	Tail Rotor Drive Shaft Assembly & Flex Plate Installation	65.2
65-5	Hanger Bearing	65.4
65-7	Damper Assembly	65.6
65-9	Tail Rotor Gearbox Installation	65.8
65-13	Tail Rotor Gearbox Seals	65.12

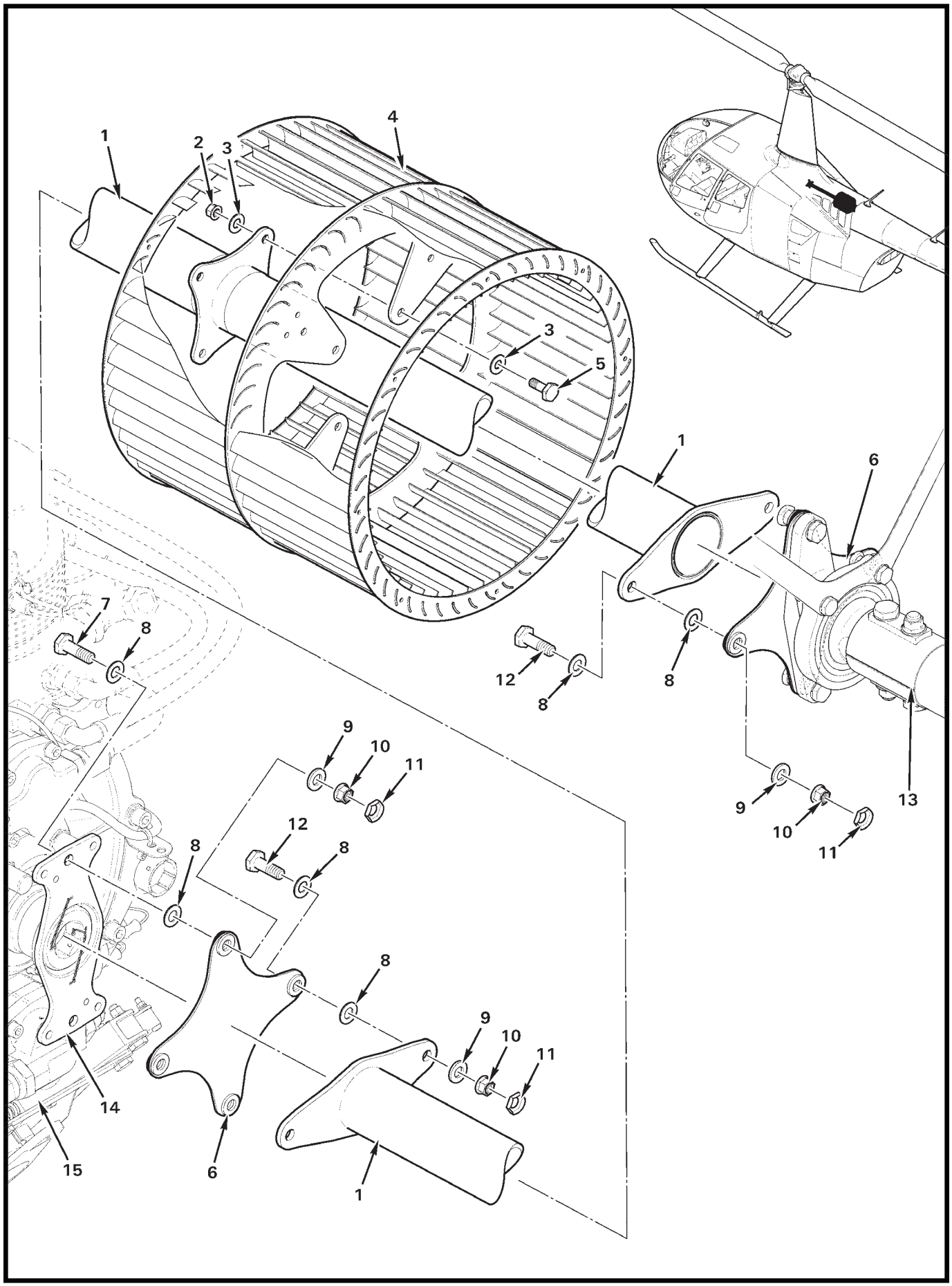

FIGURE 65-1 TAIL ROTOR DRIVE FAN SHAFT, FANWHEEL, & FLEX PLATE INSTALLATION

FIGURE AND INDEX NUMBER	PART NUMBER	DESCRIPTION	PARTS AVAIL	QTY PER ASSY
		TAIL ROTOR DRIVE FAN SHAFT, FANWHEEL, & FLEX PLATE INSTALLATION		
65-1-1	F196-1	Tail Rotor Drive Shaft Weldment – Fan	X	1
2	D210-3	Nut	X	4
3	NAS1149F0332P	Washer	X	8
4	G174-1	Fanwheel Assembly	X	1
5	NAS6603-3	Bolt	X	4
6	C947-3	Flex Plate Assembly	X	2
7	NAS6604-6	Bolt	X	4
8	NAS1149F0432P*	Washer	X	12
9	NAS1149F0463P*	Washer	X	6
10	D210-4	Nut	X	6
11	B330-13	Palnut	X	6
12	NAS6604-5	Bolt	X	2
13	D224-4	Shaft Assembly (Ref, see Figure 65-3)		
14	F908-1	Yoke (Ref, see Figure 63-3)		
15	F006-1	Main Rotor Gearbox Assembly (Ref, see Figure 63-3)		

NOTES * See R66 MM Chapter 65 for shimming procedure.

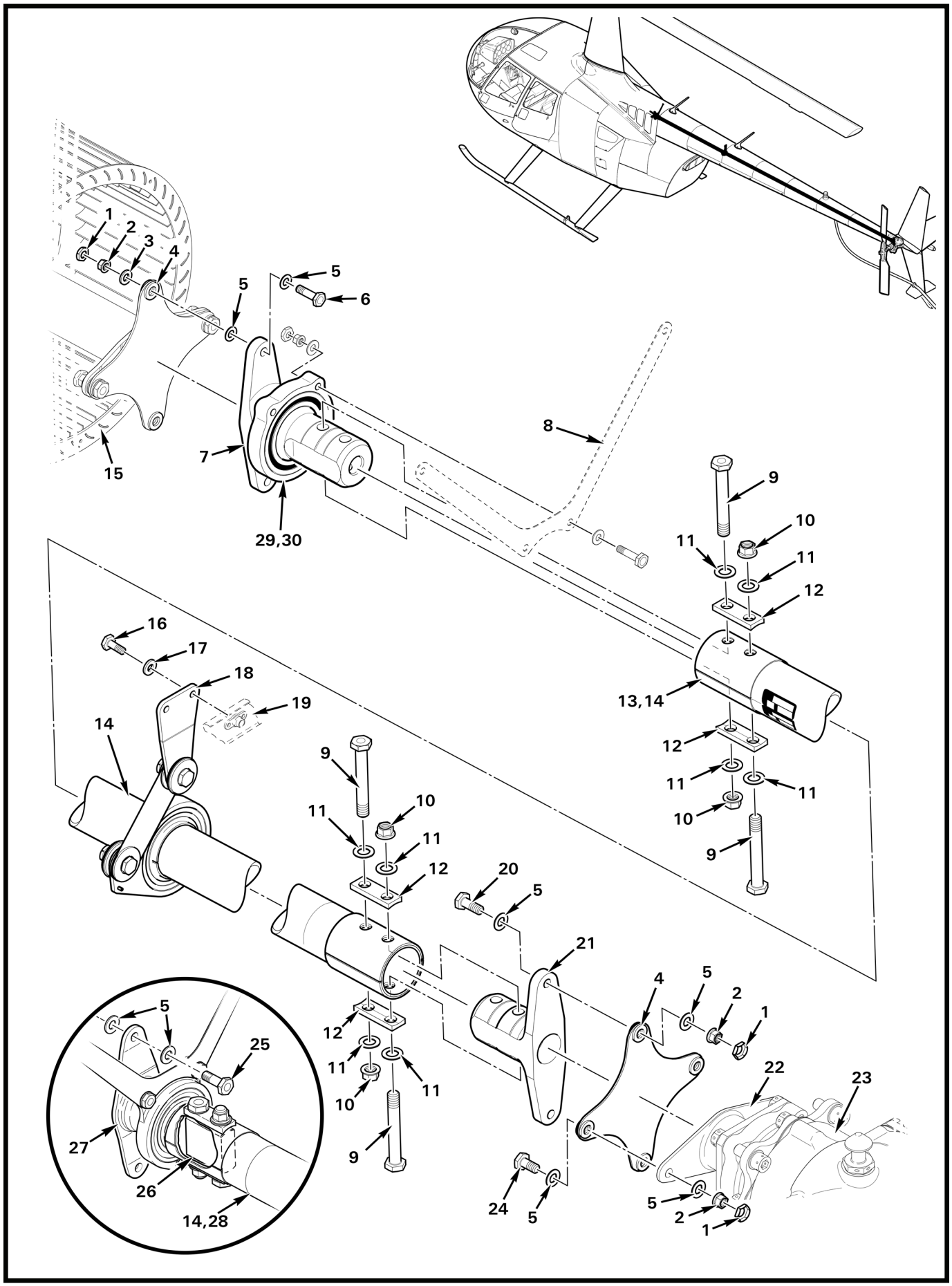

FIGURE 65-3 TAIL ROTOR DRIVE SHAFT ASSEMBLY & FLEX PLATE INSTALLATION

FIGURE AND INDEX NUMBER	PART NUMBER	DESCRIPTION	PARTS AVAIL	QTY PER ASSY
		TAIL ROTOR DRIVE SHAFT ASSEMBLY & FLEX PLATE INSTALLATION		
65-3-1	B330-13	Palnut	X	6
2	D210-4	Nut	X	6
3	NAS1149F0463P	Washer	X	2
4	C947-3	Flex Plate Assembly	X	2
5	NAS1149F0432P	Washer	X	12
6	NAS6604-8	Bolt	X	2
7	D224-5	Yoke Assembly (Incl items 29 and 30)	X	1
8	F193-2	Hangar (Ref; see Figure 65-5)		
9	NAS6605-28	Bolt	X	4
10	D210-5	Nut	X	4
11	NAS1149F0532P	Washer	X	8
12	C191-7	Block	X	4
13	D224-4	Shaft Assembly (Incl items 7 thru 12, 14, 18 and 21)	X	1
14	D196-1	Shaft Assembly	X	1
15	G174-1	Fanwheel Assembly (Ref; see Figure 65-1)		
16	NAS6603-3	Bolt	X	4
17	NAS1149F0363P	Washer	X	4
18	C041-12	Damper Assembly (Ref; see Figure 65-7)		
19	D072-1	Bulkhead Assembly – Tailcone (Ref)		
20	NAS6604-7	Bolt	X	2
21	D195-2	Yoke	X	1
22	C116-1	Yoke (Ref; see Figure 65-13)		
23	C021-1	Tail Rotor Gearbox Assembly (Ref; see Figure 65-9)		
24	NAS6604-4	Bolt	X	2
25	NAS6604-5	Bolt	X	2
26	A553-3*	Block	X	1
27	F195-1*	Yoke (remove from service per AD 2021-04-12)	O	1
28	D224-3*	Shaft Assembly (Ref; includes items 14, 25, 27, F193-1* hangar, and F172-1* bearing assembly)		
29	D224-6	Bearing Assembly (includes item 30; Ref, see Figure 65-5)		
30	C647-8	Bearing (Ref; see Figure 65-5)		

NOTES * Earlier R66s, no longer available.

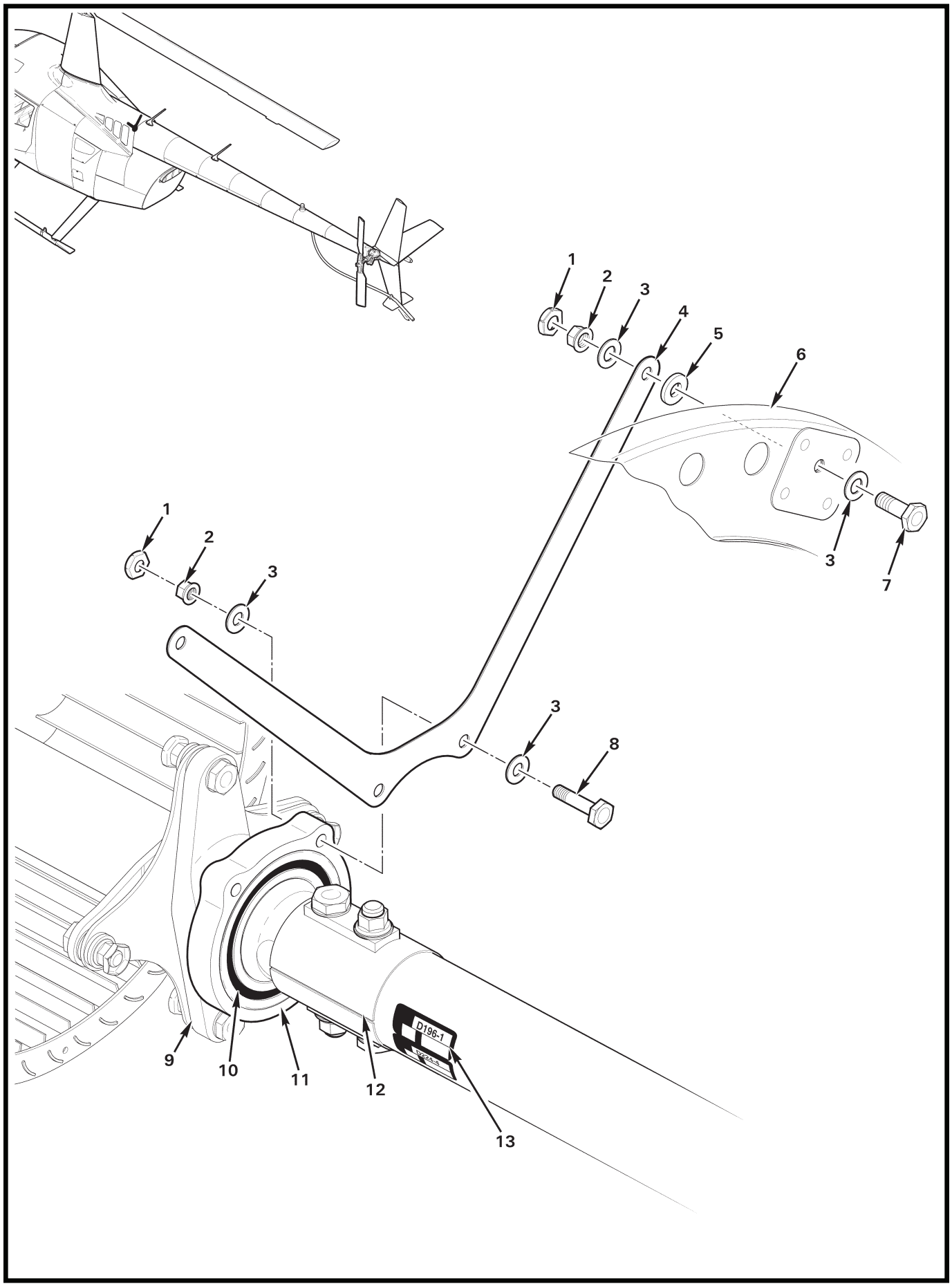
1
2
3
4
5
6
3
7
1
2
3
3
8
9
10
11
12
13
D196-1

FIGURE AND INDEX NUMBER	PART NUMBER	DESCRIPTION	PARTS AVAIL	QTY PER ASSY
		HANGER INSTALLATION		
65-5-1	B330-7	Palnut	X	2
2	D210-3	Nut	X	2
3	NAS1149F0332P	Washer	X	4
4	F193-2	Hanger	X	1
5	NAS1149F0363P	Washer	X	2
6	D070-1	Bulkhead Assembly (Ref)		
7	NAS6603-3	Bolt	X	2
8	NAS6603-8	Bolt	X	2
9	D224-5	Yoke Assembly (Includes items 10 and 11. Ref, see Figure 65-3.)		
10	C647-8	Bearing (Ref)		
11	D224-6	Bearing Assembly (Includes item 10. Ref, see Figure 65-3.)		
12	D224-4	Tail Rotor Drive Shaft Assembly (Ref; see Figure 65-3)		
13	—	Data Plate (D196-1 tail rotor drive shaft, D224-4 tail rotor drive shaft assembly; P/N, revision letter, serial number)	O	2

NOTES

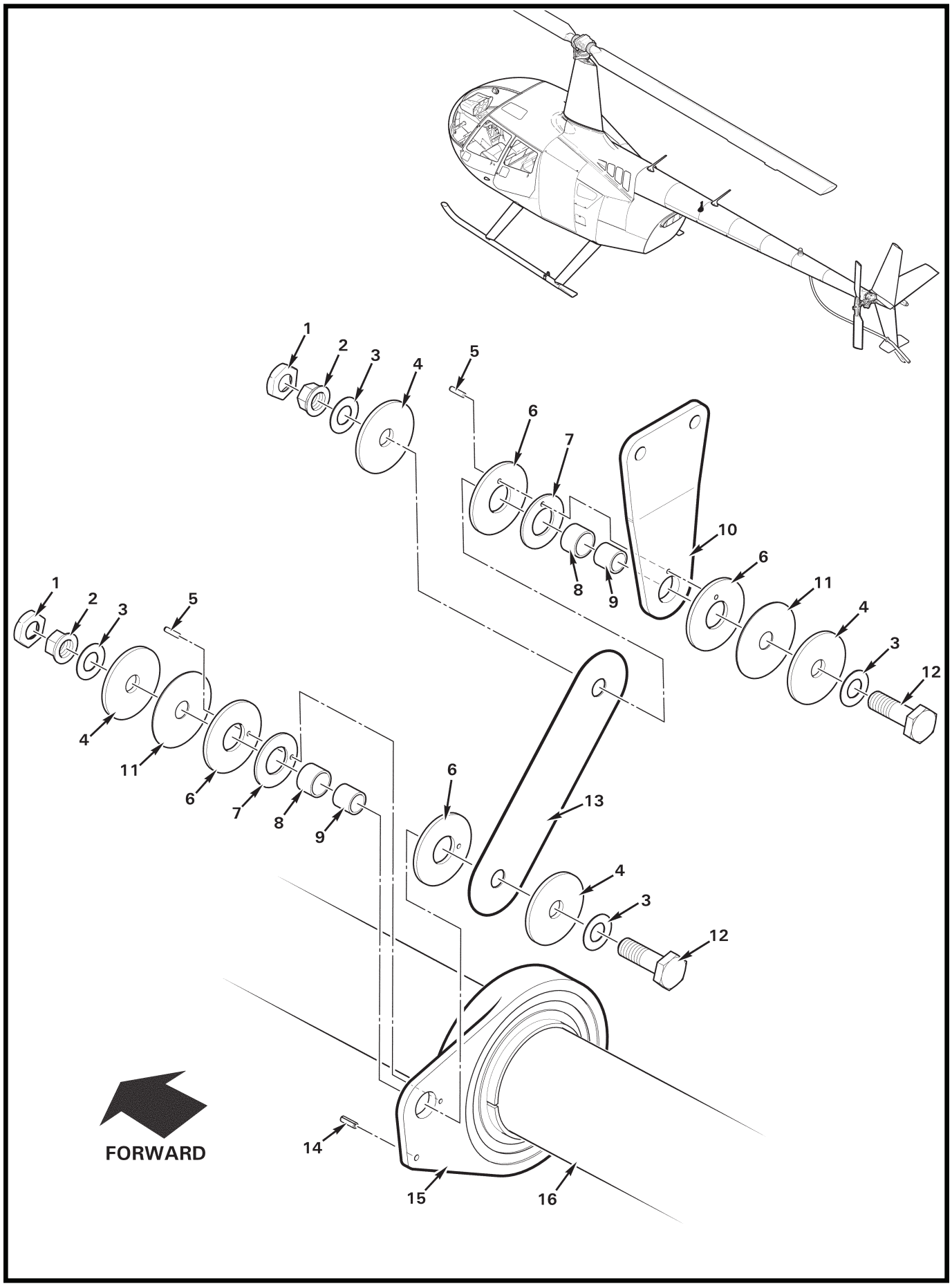
1
2
3
4
5
6
7
8
9
10
11
12
13
14
15
16
FORWARD

FIGURE AND INDEX NUMBER	PART NUMBER	DESCRIPTION	PARTS AVAIL	QTY PER ASSY
		DAMPER ASSEMBLY		
65-7-1	B330-13	Palnut	X	2
2	D210-4	Nut	X	2
3	NAS1149D0416J	Washer	X	4
4	A141-37	Washer	X	4
5	A041-10	Dowel Pin	X	2
6	C041-5	Washer	X	4
7	C041-6	Spring Washer	X	2
8	05DU04	Bushing	X	2
9	A105-12	Journal	X	2
10	C041-13	Arm	X	1
11	A141-36	Washer	X	2
12	NAS6604-6	Bolt	X	2
13	C041-3	Link	X	1
14	MS16562-11	Pin	X	1
15	C041-11*	Bearing Assembly	X	1
16	D224-3	Tail Rotor Drive Shaft Assembly (Ref)		

NOTES * See R66 SB-20 current revision.

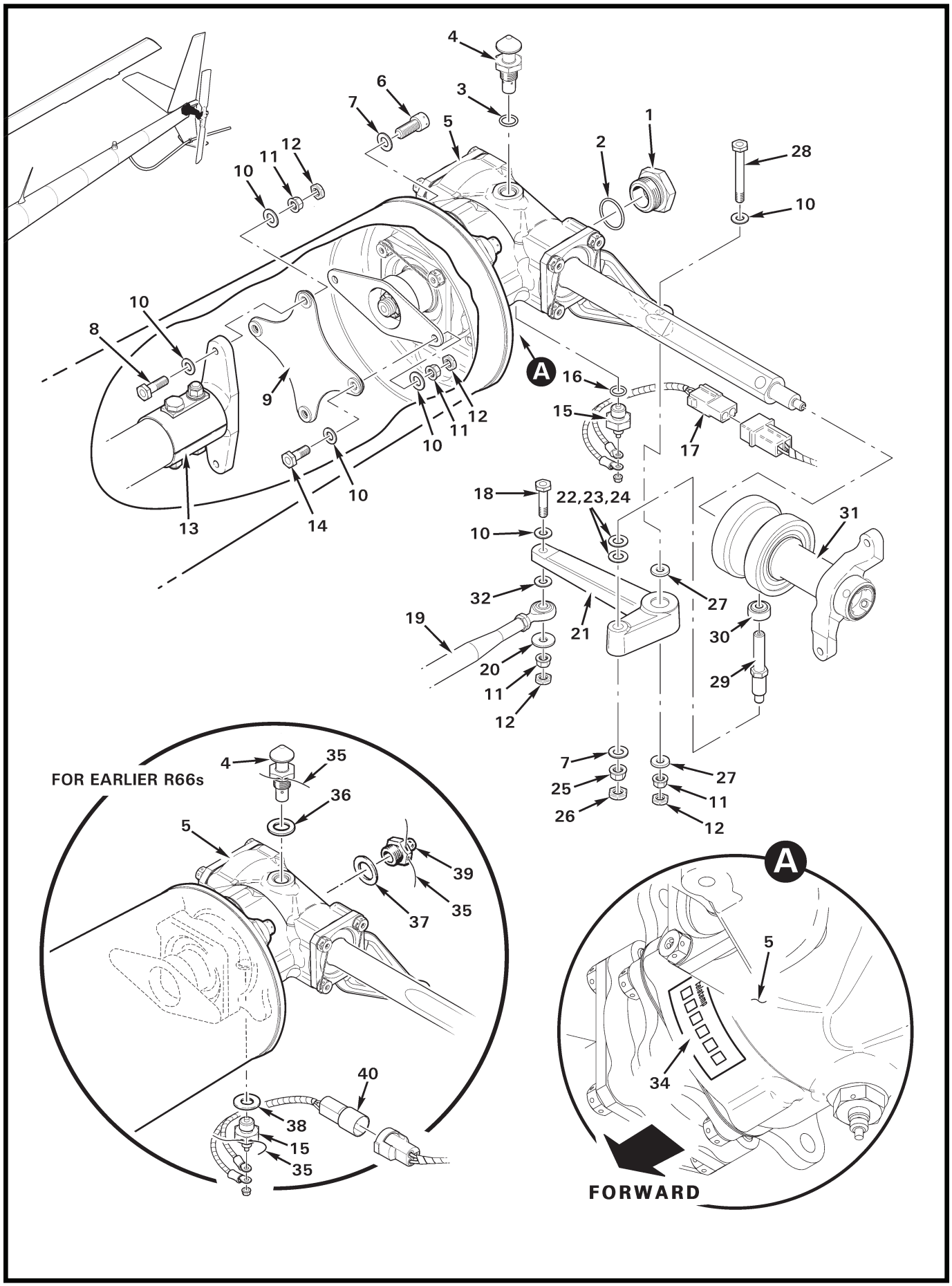
4
3
6
7
5
1
2
28
10
11
12
10
8
9
A
16
15
17
13
14
10
11
12
10
18
22,23,24
31
10
32
27
19
21
30
20
29
11
12
7
25
26
27
11
12
FOR EARLIER R66s
4
35
36
5
39
35
37
40
38
15
35
A
5
34
FORWARD

FIGURE AND INDEX NUMBER	PART NUMBER	DESCRIPTION	PARTS AVAIL	QTY PER ASSY
		TAIL ROTOR GEARBOX INSTALLATION		
65-9-1	B563-4	Sight Gage (with UV filter)	X	1
	B563-2	Sight Gage (Ref, earlier helicopters)		
2	A215-020	O-Ring	X	1
3	MS28778-5	Packing (o-ring)	X	1
4	A610-1	Filler-Vent Plug	X	1
5	C021-1	Tail Rotor Gearbox Assembly (Includes items 1 thru 4, 15 thru 17, 33, and 34. See also Figure 65-13.)	X	1
	C021-1R	C021-1 Gearbox Assembly – Tail Rotor (overhaul exchange)	X	1
6	NAS1352-5-12P	Screw	X	4
7	NAS1149F0532P	Washer	X	5
8	NAS6604-7	Bolt	X	2
9	C947-3	Flex Plate Assembly (Ref; see Figure 65-3)		
10	NAS1149F0432P	Washer	X	6
11	D210-4	Nut	X	6
12	B330-13	Palnut	X	6
13	D224-3	Tail Rotor Drive Shaft Assembly (Ref; see Figure 65-3)		
14	NAS6604-4	Bolt	X	2
15	B566-2	Chip Detector (includes nut)	X	1
16	MS28778-4	Packing (O-ring)	X	1
17	C049-4	Harness Assembly (Chip detector. Replaces item 40, also order item 41, as required.)	X	1
18	NAS6604-10	Bolt (or NAS6604-11)	X	1
19	C121-17	Push-Pull Tube Assembly (Ref; see Figure 67-39)		
20	A214-3	Washer	X	1
21	A120-5	Bellcrank Assembly	X	1
22	C117-34	Shim – Washer (thickness = 0.016 inch)	X	A/R
23	C117-35	Shim – Washer (thickness = 0.020 inch)	X	A/R
24	C117-36	Shim – Washer (thickness = 0.026 inch)	X	A/R
25	D210-5	Nut	X	1
26	B330-16	Palnut	X	1
27	MS20002-4	Washer	X	2
28	NAS6604-25	Bolt	X	1
29	C125-1	Stud	X	1
30	A104-4	Bearing	X	1
31	C031-1	Pitch Control Assembly (Incl items 28 and 29)	X	1

NOTES

Continues

FIGURE AND INDEX NUMBER	PART NUMBER	DESCRIPTION	PARTS AVAIL	QTY PER ASSY
		TAIL ROTOR GEARBOX INSTALLATION (Cont'd)		
65-9-32	NAS1149F0432P	Washer (or NAS1149F0463P to maintain clearance)	X	A/R
33	C545-1	Gear Set (Ref, earlier ships, includes -2 and -3; not shown)		
	C545-2	Pinion (Ref, not shown)		
	C545-3	Gear (Ref, not shown)		
34	F110-2	Teletemp (Temperature Recorder, 140°–190° F)	X	1
		* * *		
35	MS20995C32*	0.032 in. dia. Safety Wire	X	A/R
36	MS35769-9*	Gasket	X	1
37	MS35769-11*	Gasket	X	1
38	MS35769-8*	Gasket	X	1
39	B563-1*	Sight Gage	X	1
40	C049-1*	Harness Assembly (No longer available, replaced by item 17. Also order item 41, as required.)		
		* * *		
41	KI-276	R44-series and R66 B264-XX Connector Upgrade Kit Instructions (Replaces obsoleted B264-XX connectors with B263-XX connectors on: C049-1 tail rotor gearbox chip detector harness assembly, C023 tailcone aft wire harness, and tail light wire on C044 horizontal stabilizer harness.)	X	A/R

NOTES * Earlier R66s.

Intentionally Blank

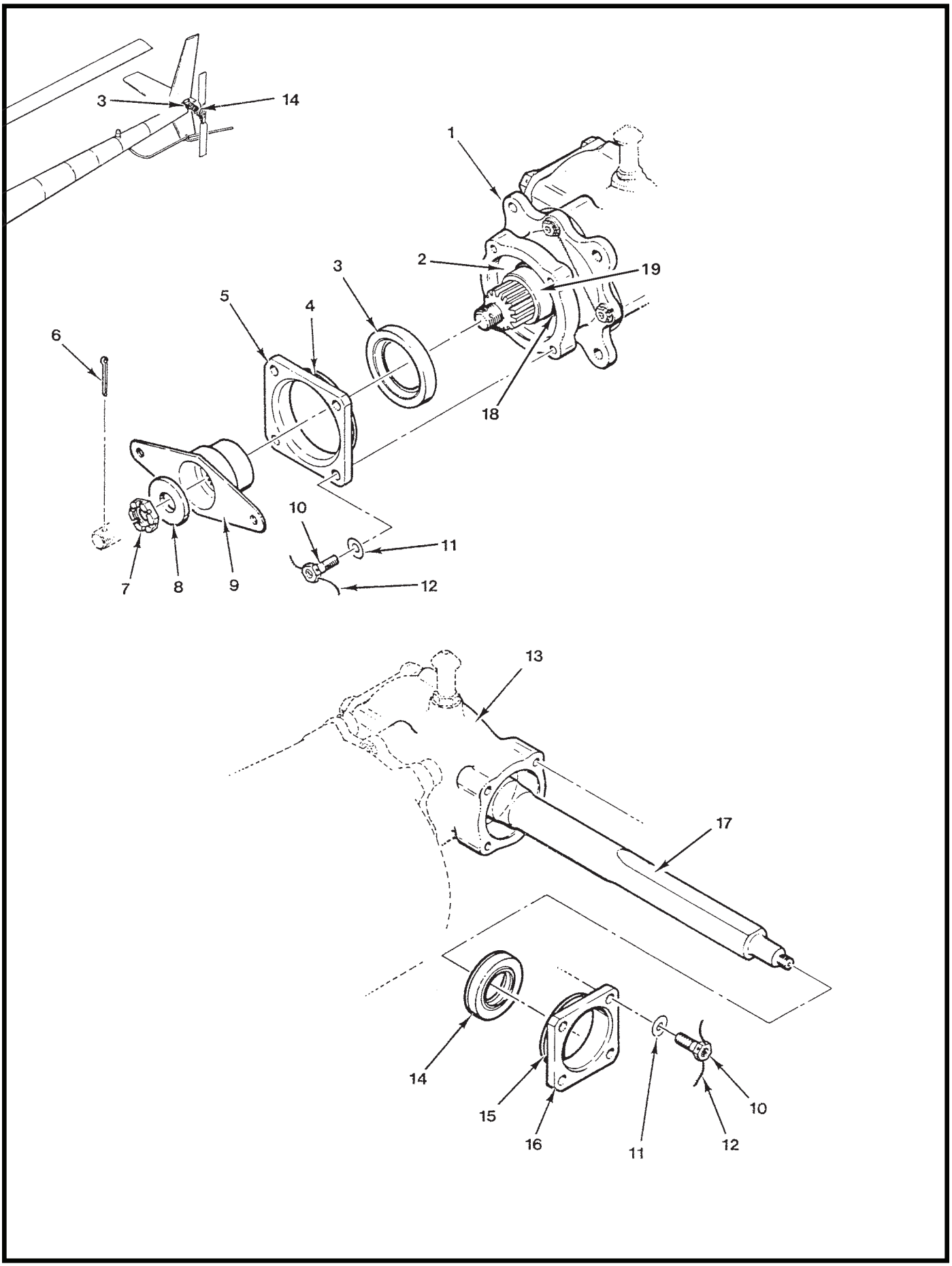
3
14
1
2
19
3
5
4
6
18
10
11
7
8
9
12
13
17
14
15
16
11
10
12

FIGURE AND INDEX NUMBER	PART NUMBER	DESCRIPTION	PARTS AVAIL	QTY PER ASSY
		TAIL ROTOR GEARBOX SEALS		
65-13-1	C110-1	Input Cartridge (Ref)		
2	C141-2	Washer (Ref, between cap and input cartridge)		
3	A966-3	Seal	X	1
4	A215-140	O-Ring	X	1
5	C112-1	Cap	X	1
6	MS24665-210	Cotter Pin	X	1
7	AN320-8	Nut	X	1
8	A141-10	Washer	X	1
9	C116-1	Yoke	X	1
10	MS20074-04-06	Bolt	X	8
11	NAS1149F0432P	Washer	X	8
12	MS20995C32	0.032 in. dia Safety Wire	X	A/R
13	C109-1	Housing (Ref)		
14	C966-2	Seal	X	1
15	A215-133	O-Ring	X	1
16	C112-2	Cap	X	1
17	C107-1	Shaft – Output (Ref)		
18	A215-024	O-Ring	X	1
19	C266-2	Spacer	X	1

NOTES

Intentionally Blank

CHAPTER 67

FLIGHT CONTROLS

Figure	*Title*	*Page*
67-1	Cyclic Control System	67.0
67-5	Cyclic Pivot Assembly and Torque Tube	67.4
67-9	Push-Pull Tube Assemblies (Lower)	67.8
67-11	Cyclic Grip Assembly	67.10
67-15	Cyclic Grip Assembly	67.14
67-19	Cyclic Friction Assembly	67.18
67-21	Collective Stick Assembly	67.20
67-25	Jackshaft Weldment Installation	67.24
67-27	Push-Pull Tube Assemblies (Upper)	67.26
67-29	Tail Rotor Controls – Adjustable Pedals	67.28
67-31	Tail Rotor Controls – Pedal Cover Installation	67.30
67-33	F334 Support Assembly Installation	67.32
67-35	C317 Bellcrank Assembly	67.34
67-37	F316 Bellcrank Assembly	67.36
67-39	A331 Bellcrank Assembly	67.38
67-41	C017-6 Swashplate Installation	67.40
67-43B	C258-8 Pitch Link Installation	67-43A
67-43D	C258-5 & C258-1 Pitch Link Installation	67-43C
67-45	Swashplate Ball Installation (C017 revision AD & subsequent)	67.44
67-47	Swashplate Ball Installation (C017 revision AA thru AC)	67.46

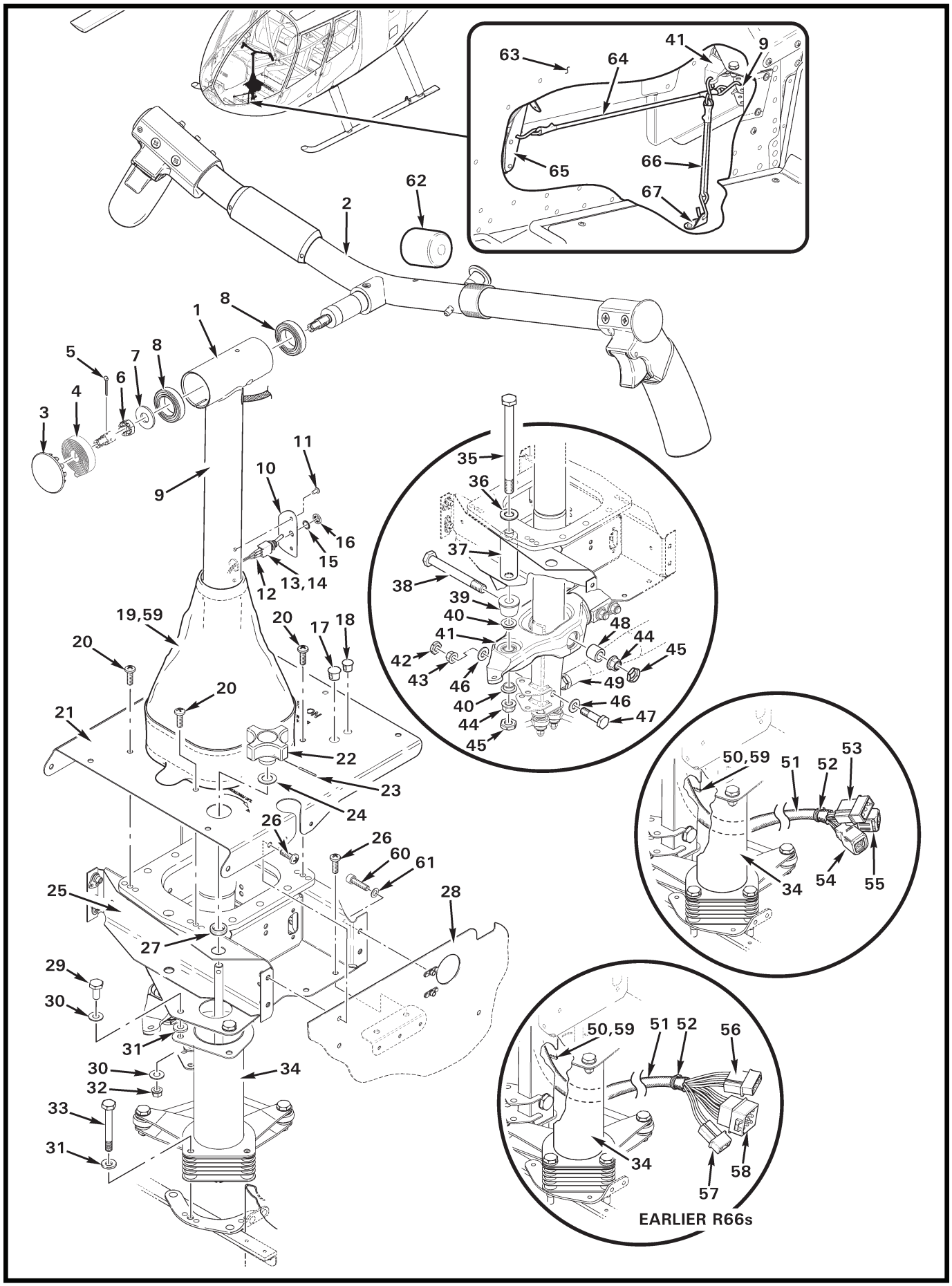
63
64
41
9
65
66
67
62
2
1
8
5
7
8
6
4
3
11
10
9
16
15
13,14
12
35
36
37
38
39
40
41
42
43
46
40
44
45
48
44
45
49
46
47
19,59
20
17
18
20
20
21
22
23
24
26
26
60
61
25
27
28
29
30
31
30
32
33
31
34
50,59
51
52
53
54
55
34
50,59
51 52
56
34
58
57
EARLIER R66s

FIGURE AND INDEX NUMBER	PART NUMBER	DESCRIPTION	PARTS AVAIL	QTY PER ASSY
		CYCLIC CONTROL SYSTEM		
67-1-1	C069-14	Cyclic Control Assembly (Incl items 2 thru 9, 11, 13, 19, 21, 25, 37, 39 thru 45, 48, and 51 thru 55)	X	1
	C069-8	Cyclic Control Assembly (Ref, no longer available)		
2	C058-10	Grip Assembly – Cyclic (see Figure 67-11)	X	1
3	B209-4	Plug	X	1
4	D684-1	Spring	X	1
5	MS24665-69	Cotter Pin	X	1
6	MS17825-5	Nut	X	1
7	A141-40	Washer	X	1
8	A647-2	Bearing	X	2
9	D320-8	Stick Assembly (Ref)		
10	B306-4	Mount	X	1
11	SR-3035B	Rivet	X	2
12	B158-1	Heat Shrink (around terminals)	X	A/R
13	C049-9	Switch Assembly – Landing Light (Incl items 10, 12, 14, and wires)	X	1
14	B300-1	Switch (Incl items 15 and 16)	X	1
15	B227-3	Lockwasher	X	1
16	B227-11	Dress Nut	X	1
17	2613	Hole Plug	X	1
18	2603	Hole Plug	X	1
19	A677-4	Boot (install using item 59)	X	1
20	MS27039C0808	Screw	X	4
21	F444-2	Cover Assembly – Cyclic	X	1
	F444-1	Cover Assembly – Cyclic	O	1
22	A499-2	Knob	X	1
23	MS16562-35	Spring Pin	X	1
24	NAS1149F0432P	Washer (or NAS1149F0463P)	X	A/R
25	F338-1	Cyclic Box Assembly	O	1
26	MS27039C0806	Screw	X	14
27	NAS557-6A	Grommet	X	1
28	—	Keel Panel (Ref)		
29	NAS6603-2	Bolt	X	2
30	NAS1149F0332P	Washer	X	4
31	NAS1149F0363P	Washer	X	4

NOTES

Continues

FIGURE AND INDEX NUMBER	PART NUMBER	DESCRIPTION	PARTS AVAIL	QTY PER ASSY
		CYCLIC CONTROL SYSTEM (Cont'd)		
67-1-32	MS21042L3	Nut	X	5
33	NAS6603-18	Bolt	X	2
34	C048-1	Cyclic Friction Assembly (Ref; see also Figure 67-19)		
35	NAS6605-56	Bolt	X	1
36	NAS1149F0532P	Washer	X	1
37	A130-6	Spacer	X	1
38	NAS1305-35	Bolt	X	5
39	A339-1	Spacer	X	1
40	A340-1	Spacer	X	2
41	C177-5	Pivot Assembly	X	1
42	B330-13	Palnut	X	1
43	D210-4	Nut	X	1
44	D210-5	Nut	X	2
45	B330-16	Palnut	X	2
46	NAS1149F0432P	Washer	X	1
47	NAS6604-9	Bolt	X	1
48	C105-3	Journal	X	1
49	C121-1	Push-Pull Tube (Ref, see Figure 67-5)		
50	MS21266-1N	Grommet (install using item 59)	X	A/R
51	B266-8	Sleeving	X	A/R
52	B268-3	Lacing Tape (at both ends of sleeve)	X	A/R
53	B263-14	Housing	X	1
	B263-1	Pin	X	3
54	D269-11	Plug (includes [9] M39029/57-354 sockets)	X	1
55	D269-9	Plug (includes [9] M39029/58-360 pins)	X	1
56	B263-36	Housing	X	1
	B263-1	Pin	X	4
57	B263-12	Housing	X	1
	B263-1	Pin	X	2
58	B263-20	Housing	X	1
	B263-1	Pin	X	9
59	B270-8.5oz	Adhesive	X	A/R
60	NAS1352-08-6P	Screw	X	4
61	NAS620-8L	Washer	X	4
62	A959-5	Cap	X	1

NOTES

Continues

FIGURE AND INDEX NUMBER	PART NUMBER	DESCRIPTION	PARTS AVAIL	QTY PER ASSY
		CYCLIC CONTROL SYSTEM (Cont'd)		
67-1-63	F033	Lower Console Assembly (Ref)		
64	D918-1	Elastic Cord Assembly (3 lb ± 0.25)	X	1
65	F407-5	Gusset (Ref)		
66	D918-2	Elastic Cord Assembly (5 lb ± 0.50)	X	1
67	A748-8	Angle (Ref)		

NOTES

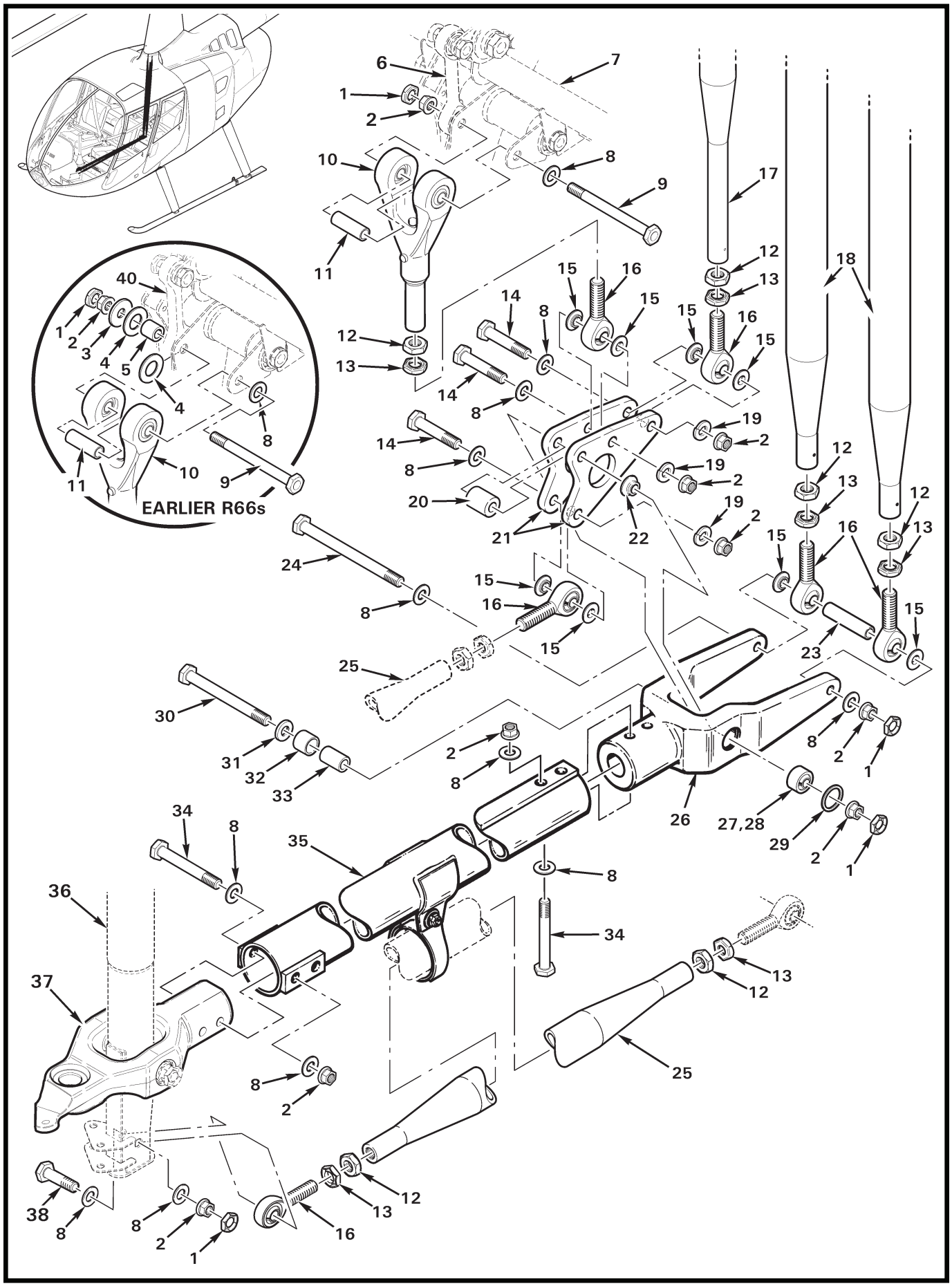
EARLIER R66s

FIGURE AND INDEX NUMBER	PART NUMBER	DESCRIPTION	PARTS AVAIL	QTY PER ASSY
		CYCLIC PIVOT ASSEMBLY AND TORQUE TUBE		
67-5-1	B330-13	Palnut	X	4
2	D210-4	Nut	X	11
3	A214-3	Washer	X	1
4	A214-11	Washer	X	2
5	A105-14	Journal	X	1
6	B345-3	Link (Ref; see Figure 67-33)		
7	F334	Aft Support Assembly (Ref; see Figure 67-33)		
8	NAS1149F0432P	Washer	X	16
9	NAS6604-37	Bolt	X	1
10	G205-1	Fork Assembly	X	1
11	C130-12	Spacer	X	1
12	AN316-5R	Nut	X	6
13	B330-16	Palnut	X	6
14	NAS6604-15	Bolt	X	3
15	A115-1	Spacer	X	8
16	B163-2*	Rod End	X	6
17	F121-7	Push-Pull Tube (Incl items 12, 13 and 16, [1] each)	X	1
18	F121-5	Push-Pull Tube (Incl items 12, 13 and 16, [1] each)	X	2
19	B332-441	Lockwasher	X	3
20	A130-8	Spacer	X	1
21	C958-6	Bellcrank	X	2
22	A137-1	Spacer	X	1
23	C130-47	Spacer	X	1
24	NAS6604-47	Bolt	X	1
25	C121-1	Push-Pull Tube Assembly (Incl item 12, 13, and 16)	X	1
26	D696-6	Yoke Assembly (Incl items 27 thru 29, and 32)	X	1
27	A103-4	Bearing (install using item 28)	X	1
28	B270-11	Adhesive	X	A/R
29	WH-62-S02	Ring	X	1
30	NAS6604-36	Bolt	X	1
31	NAS1149F0463P	Washer	X	1
32	06DU06	Bearing	X	1
33	A105-6	Journal	X	1
34	NAS6604-25	Bolt	X	4
35	C319-5	Torque Tube Assembly	X	1

NOTES * Coat all threads with A257-2 or A257-22 oil before assembly.

Continues

FIGURE AND INDEX NUMBER	PART NUMBER	DESCRIPTION	PARTS AVAIL	QTY PER ASSY
		CYCLIC PIVOT ASSEMBLY AND TORQUE TUBE (Cont'd)		
67-5-36	C069	Cyclic Control Assembly (Ref; see Figure 67-1)		
37	C177-5	Pivot Assembly (Ref; see Figure 67-1)		
38	NAS6604-9	Bolt (Ref; see Figure 67-1)		
39	C175-5	Pivot Assembly – Cyclic (Incl items 1 thru 5, 8 thru 16, 19 thru 26, 30, 31, and 33 thru 35)	O	1
40	C327-1	Link Assembly (No longer available. Superseded by item 6.)	O	1

NOTES

Intentionally Blank

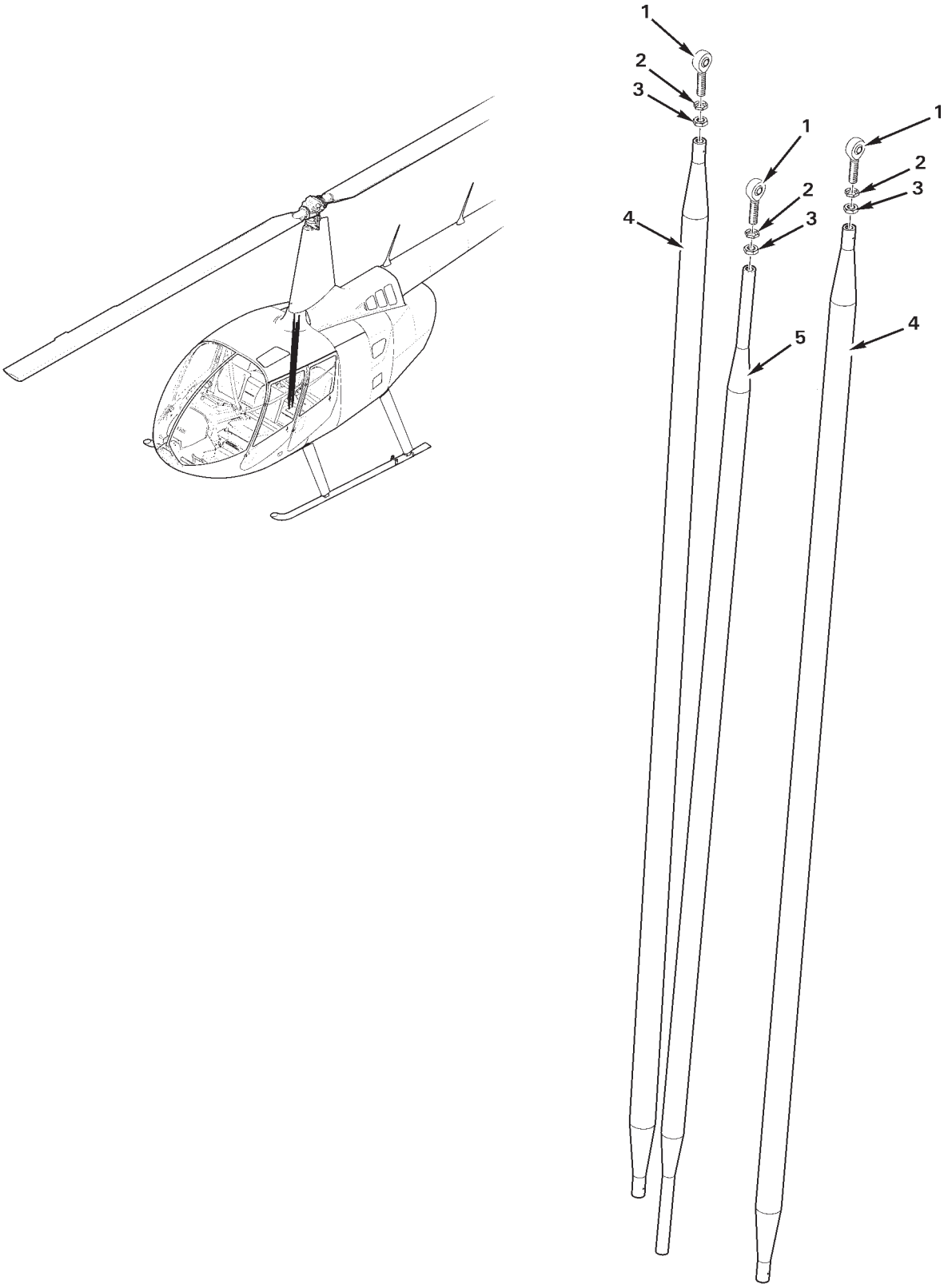
1
2
3
4
1
2
3
5
1
2
3
4

FIGURE AND INDEX NUMBER	PART NUMBER	DESCRIPTION	PARTS AVAIL	QTY PER ASSY
		PUSH-PULL TUBE ASSEMBLIES (LOWER)		
67-9-1	B163-2*	Rod End	X	1
2	B330-16	Palnut	X	1
3	AN316-5R	Nut	X	1
4	F121-5	Push-Pull Tube Assembly (Incl items 1 thru 3, [1] each)	X	2
5	F121-7	Push-Pull Tube Assembly (Incl items 1 thru 3, [1] each)	X	1

NOTES * Coat all threads with A257-2 or A257-22 oil before assembly.

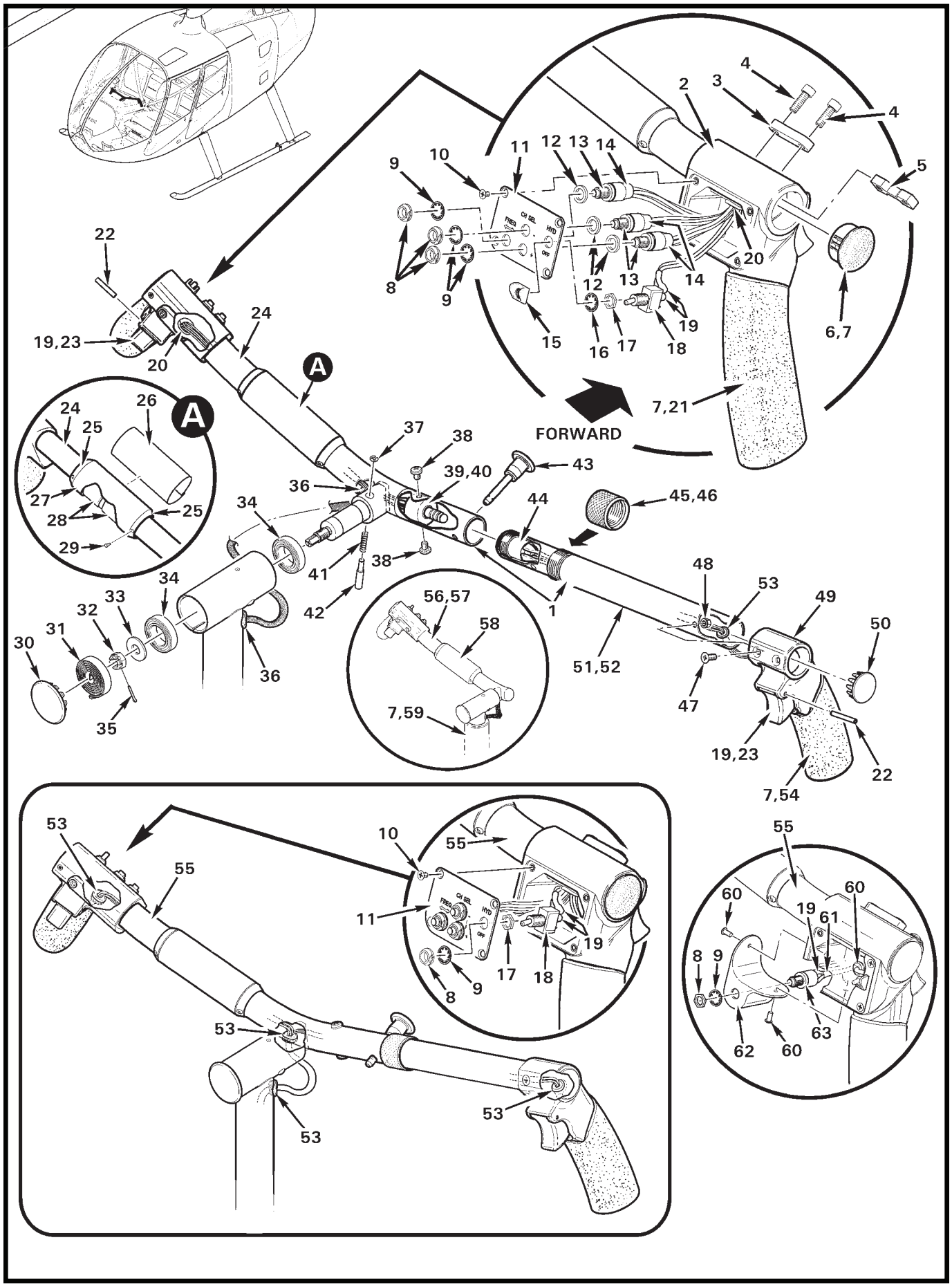
4
3
2
4
5
11
12
13
14
10
9
22
8
9
12
13
14
20
24
19,23
20
15
16
17
18
19
6,7
A
7,21
FORWARD
24
26
25
A
37
38
43
27
36
39,40
28
25
34
44
45,46
29
41
38
48
34
53
33
56,57
49
32
42
1
58
50
31
30
36
51,52
47
7,59
35
19,23
22
7,54
53
55
10
55
11
19
17
18
9
8
53
53
53
55
60
60
19
61
8
9
63
62
60

FIGURE AND INDEX NUMBER	PART NUMBER	DESCRIPTION	PARTS AVAIL	QTY PER ASSY
		CYCLIC GRIP ASSEMBLY		
67-11-1	C058-10	Grip Assembly – Cyclic (Incl items 2 thru 7, 10, 11, 13 thru 15, 18 thru 29, 36 thru 50, and 52 thru 54)	X	1
2	D379-1	Grip	X	1
3	D443-5	Bar	X	1
4	91251A194	Screw	X	2
5	D443-3	Block Assembly	X	1
6	2703	Hole Plug (install using item 7)	X	1
7	B270-15	Adhesive	X	A/R
8	B227-4	Dress Nut	X	1
9	B227-3	Lockwasher	X	1
10	MS24693-S1	Screw	X	4
11	C214-24	Plate	X	1
12	94773A770	Washer	X	3
13	B227-2	Switch Assembly (“FREQ” and “CH SEL” [2]; includes items 8, 9, and 12)	X	3
14	B158-6	Heat Shrink	X	A/R
15	D443-7	Guard	X	1
16	—	Lockwasher	O	1
17	—	Hex Nut (5/16”)	O	1
18	B300-3	Switch Assembly – “HYD OFF” (includes items 16 and 17)	X	1
19	B158-2	Heat Shrink	X	A/R
20	NAS557-6A	Grommet	X	A/R
21	D379-2	Cover (install using item 7)	X	2
22	NAS1407N9L14	Pin	X	2
23	U2-279	Trigger Switch	X	2
24	A756-24	Grip Weldment (Revision AI and subsequent)	O	1
25	G725-3	Collar	X	2
26	F654-4	Decal (flight limitations)	X	1
	F654-28	Decal (flight limitations, Police ships)	X	1
	G682-14	Decal (flight limitations, E.N.G. ships)	X	1
27	G725-2	Tube	X	1
28	B175-12	Loop Tape	X	A/R
29	SR-2032B	Rivet	X	4
30	B209-4	Plug	X	1
31	D684-1	Spring	X	1

NOTES

Continues

FIGURE AND INDEX NUMBER	PART NUMBER	DESCRIPTION	PARTS AVAIL	QTY PER ASSY
		CYCLIC GRIP ASSEMBLY (Cont'd)		
67-11-32	MS17825-5	Nut	X	1
33	A141-40	Washer	X	1
34	A647-2	Bearing	X	2
35	MS24665-69	Cotter Pin	X	1
36	G1042	Grommet	X	2
37	MS16633-2012	Retaining Ring	X	1
38	MS35206-241	Screw	X	2
39	A776-1	Mount	X	1
40	A781-1	Plug	X	1
41	D774-6	Spring	X	1
42	A321-16	Pin	X	1
43	B232-1	Pin	X	1
44	TJT-120	Jack	X	1
45	A321-22	Collar	X	1
46	A257-7	Dry Film Lube	X	A/R
47	MS24694-S3	Screw	X	2
48	MS21042L08	Nut	X	2
49	D690-1	Grip	X	1
50	B209-3	Plug	X	1
51	C058-9	Grip Assembly – Co-Pilot (Incl items 7, 19, 22, 23, 43 thru 50, and 52 thru 54; for spares)	X	1
52	A321-21	Tube	X	1
53	MS35489-4	Grommet	X	A/R
54	D690-2	Cover (install using item 7)	X	1
55	A756-24	Grip Weldment (Ref; revision AH)		
56	C058-11*	Grip Assembly – Cyclic (includes items 2 thru 7, 13 thru 15, 25, 27 thru 29, 36, 37, 41, 42, 57, and 58)	X	1
57	A756-20*	Grip Weldment (Ref)		
58	F654-28*	Decal (flight limitations, Police ships)	X	1
59	A601-3*	Grip (install using item 7)	X	1
60	MS20470AD3**	Rivet	X	2
61	B158-6**	Heat Shrink	X	A/R
62	G136-8**	Housing	X	1
63	B227-2**	Switch Assembly (Audio Panel transmit key [pilot]; includes items 8 and 9)	X	1
	C058-2329**	Wire (Ref)		
	C058-2441**	Wire (Ref)		

NOTES * Earlier R66 police ships.

** Geneva Audio push to talk button for E.N.G. ships.

Intentionally Blank

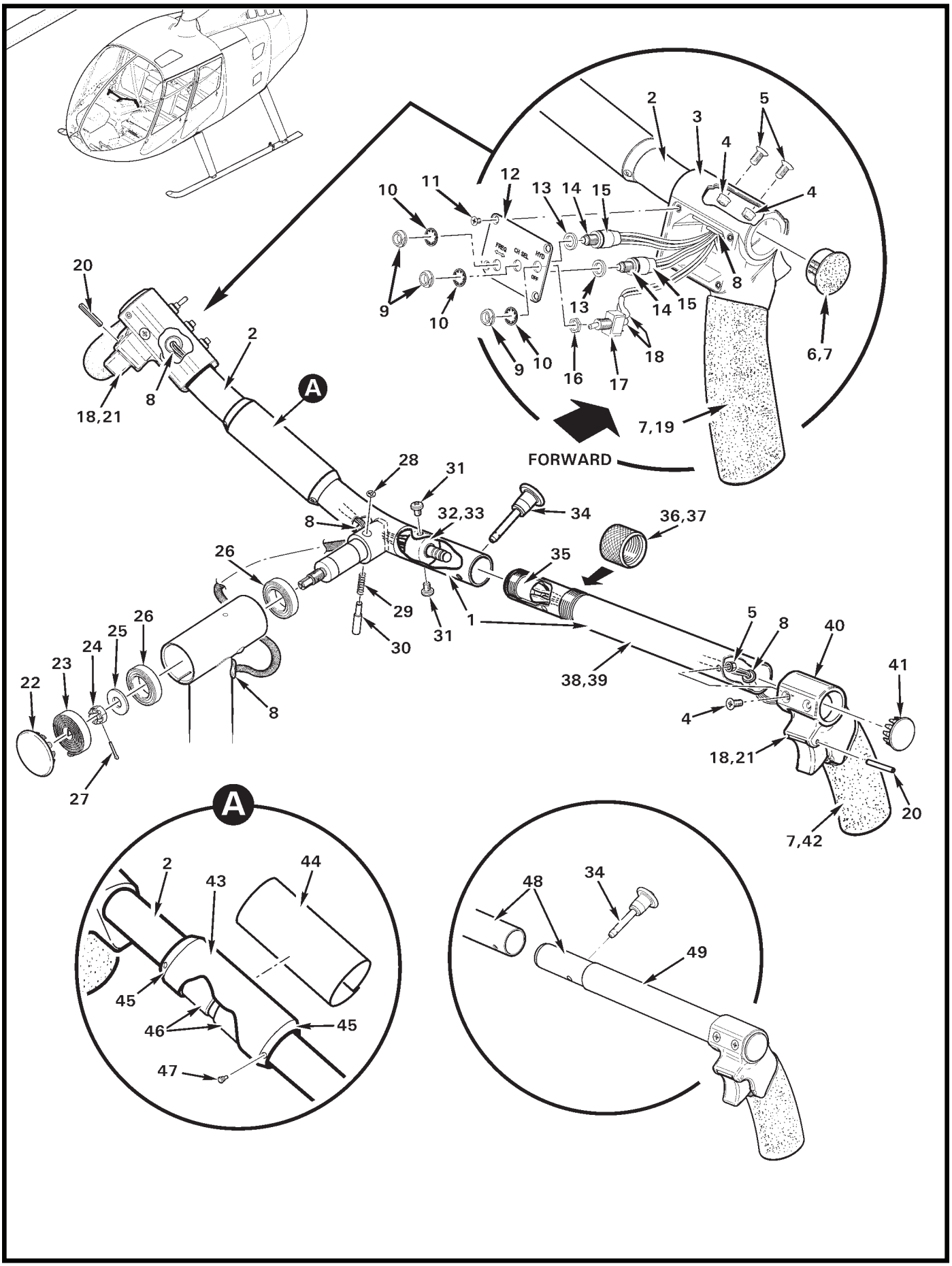
2
3
5
4
4
10
11
12
13
14
15
8
9
10
13
14
15
6,7
20
2
9
10
16
17
18
18,21
8
A
7,19
FORWARD
28
31
8
32,33
34
36,37
26
35
29
31
1
30
5
8
40
26
25
24
23
22
38,39
41
8
4
18,21
27
20
7,42
A
2
43
44
45
46
45
47
48
34
49

FIGURE AND INDEX NUMBER	PART NUMBER	DESCRIPTION	PARTS AVAIL	QTY PER ASSY
		CYCLIC GRIP ASSEMBLY		
67-15-1	C058-10*	Grip Assembly – Pilot/Co-Pilot (Ref; revision AL)		
2	A756	Grip Weldment (Ref; non-adjusting grip [item 3])		
3	D379-1	Grip	X	1
4	MS21042L08	Nut	X	4
5	MS24694-S3	Screw	X	4
	MS24694-S4	Screw (used with item 48)	X	4
6	2703	Hole Plug (install using item 7)	X	1
7	B270-15	Adhesive	X	A/R
8	MS35489-4	Grommet	X	4
9	B227-4	Dress Nut	X	1
10	B227-3	Lock Washer	X	1
11	MS24693-S1	Screw	X	4
	MS24693-S2	Screw (used with item 48)	X	4
12	C214-10	Plate	X	1
13	94773A770	Washer	X	1
14	B227-2	Switch (“FREQ” and “CH SEL”, includes items 9, 10, and 13)	X	2
15	B158-6	Heat Shrink	X	A/R
16	—	Hex Nut (5/16 in.)	O	1
17	B300-3	Switch (“HYD OFF”, includes item 16 and lockwasher [not shown])	X	1
18	B158-2	Heat Shrink	X	A/R
19	D379-2	Cover (install using item 7)	X	1
20	NAS1407N9L14	Pin	X	2
21	U2-279	Trigger Switch	X	2
22	B209-4	Plug	X	1
23	D684-1	Spring	X	1
24	MS17825-5	Nut	X	1
25	A141-40	Washer	X	1
26	A647-2	Bearing	X	2
27	MS24665-69	Cotter Pin	X	1
28	MS16633-2012	Retaining Ring	X	1
29	D774-6	Spring	X	1
30	A321-16	Pin	X	1
31	MS35206-241	Screw	X	2
32	A776-1	Mount	X	1

NOTES * Some parts/assemblies no longer available. To replace refer to Figure 67-11.

Continues

FIGURE AND INDEX NUMBER	PART NUMBER	DESCRIPTION	PARTS AVAIL	QTY PER ASSY
		CYCLIC GRIP ASSEMBLY (Cont'd)		
67-15-33	A781-1	Plug	X	1
34	B232-1	Pin	X	1
35	TJT-120	Jack	X	1
36	A321-22	Collar	X	1
37	A257-7	Dry Film Lubricant	X	A/R
38	C058-9*	Grip Assembly – Co-Pilot (Adjustable, revision AL. Includes items 4, 5, 7, 8, 20, 21, 34, 35, 40 thru 42.)	X	1
39	A321-19	Tube (Ref)		
40	D690-1	Grip	X	1
41	B209-3	Plug	X	1
42	D690-2	Cover (install using item 7)	X	1
43	G725-2	Tube	X	1
44	F654-4	Decal (flight limitations)	X	1
45	G725-3	Collar	X	2
46	B175-12	Loop Tape	X	A/R
47	SR-2032B	Rivet	X	4
		* * *		
48	C058-10*	Grip Assembly – Pilot/Co-Pilot (Ref; revision AK and prior)		
49	C058-9	Grip Assembly – Co-Pilot (Ref; revision AK and prior, non-adjusting. To replace, order item 38.)		

NOTES * Some parts/assemblies no longer available. Refer to Figure 67-11 for replacement.

Intentionally Blank

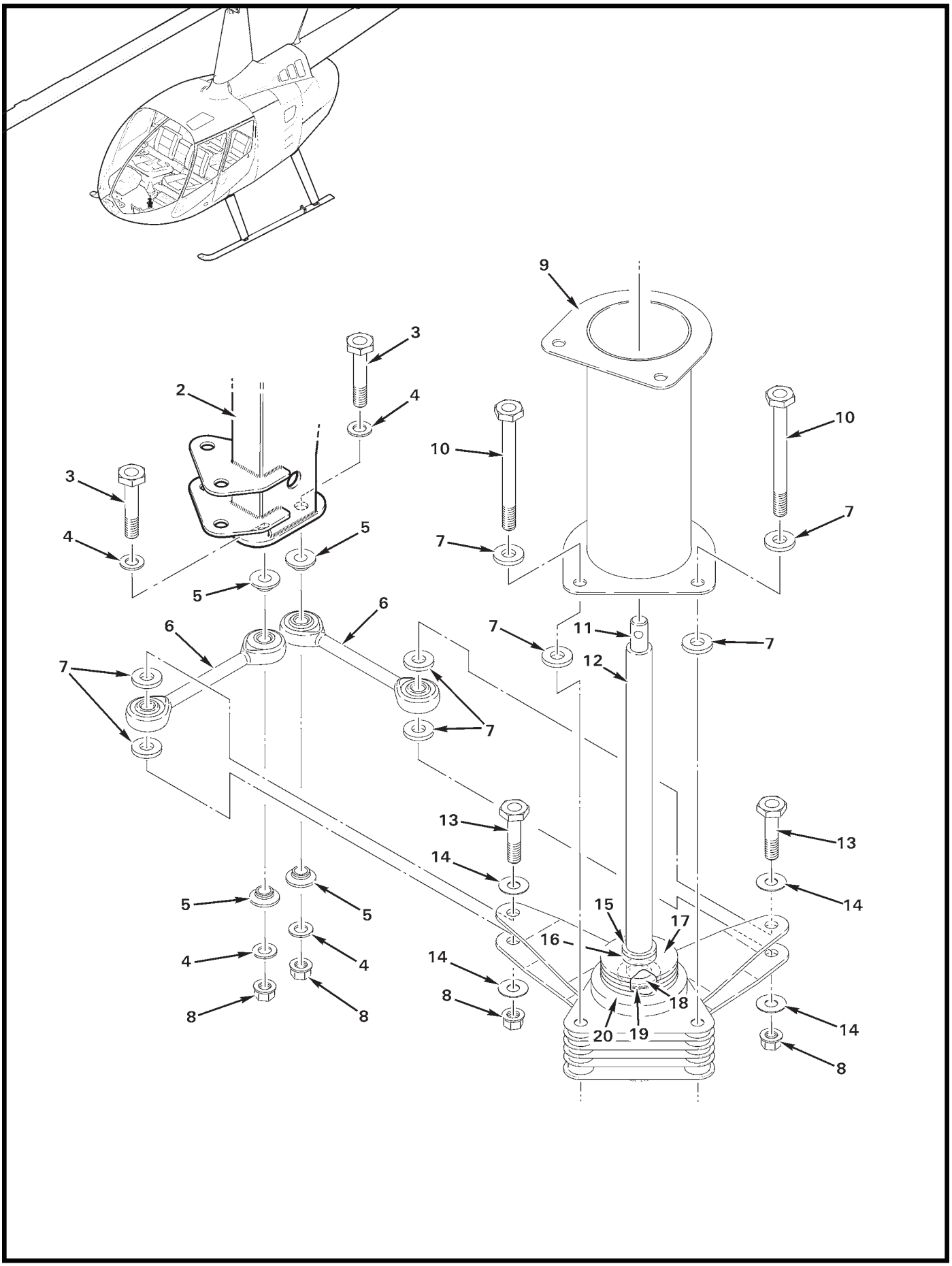
9
3
2
4
10
10
3
7
4
5
7
5
6
6
7
11
7
12
7
7
13
13
14
14
5
5
15
17
16
4
4
14
8
8
8
18
20
19
14
8

FIGURE AND INDEX NUMBER	PART NUMBER	DESCRIPTION	PARTS AVAIL	QTY PER ASSY
		CYCLIC FRICTION ASSEMBLY		
67-19-1	C048-1	Cyclic Friction Assembly (Incl items 6 thru 20)	X	1
2	C069	Cyclic Control Assembly (Ref, see Figure 67-1)		
3	NAS6603-11	Bolt	X	2
4	NAS620-10L	Washer	X	4
5	A341-1	Spacer	X	4
6	B564-1	Link	X	2
7	NAS1149F0363P	Washer	X	8
8	D210-3	Nut	X	4
9	D337-1	Torque Tube Weldment	X	1
10	NAS6603-27	Bolt	X	2
11	C494-1	Shaft (Ref)		
12	C130-2	Spacer	X	1
13	NAS6603-8	Bolt	X	2
14	NAS1149D0316J	Washer	X	4
15	NAS1149F0463P	Washer	X	1
16	A130-18	Spacer	X	1
17	A478-1	Spring Washer	X	4
18	NAS1149F0632P	Washer	X	1
19	NAS1149D0616J	Washer (installed between items 18 and 20)	X	A/R
20	A497-1	Washer (Ref)		

NOTES

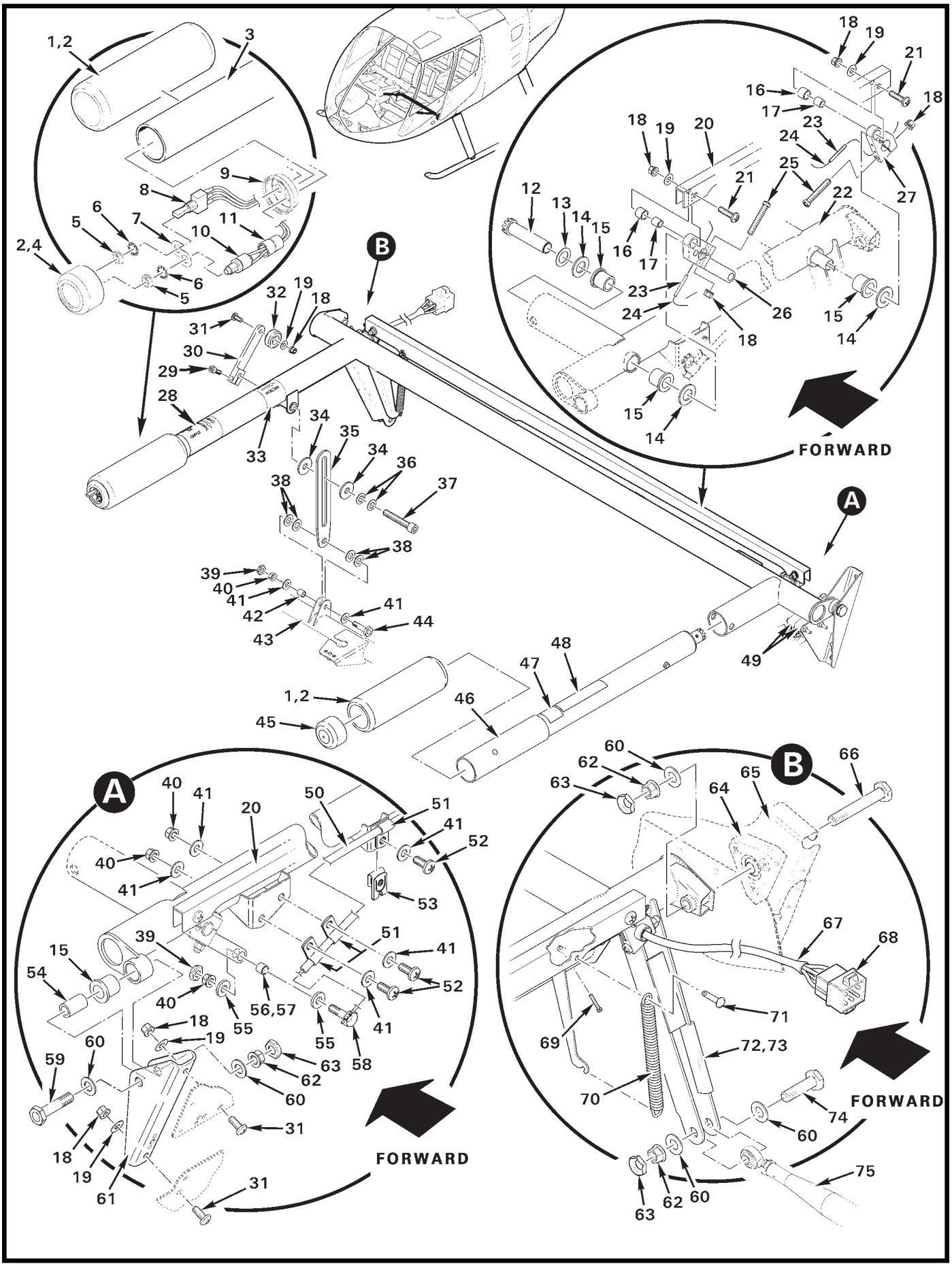

FIGURE 67-21 COLLECTIVE STICK ASSEMBLY

FIGURE AND INDEX NUMBER	PART NUMBER	DESCRIPTION	PARTS AVAIL	QTY PER ASSY
		COLLECTIVE STICK ASSEMBLY		
67-21-1	A601-1	Grip (install using item 2)	X	1
2	B270-15	Adhesive	X	A/R
3	F758-1	Stick Assembly – Collective (RH [pilot]; includes items 1, 2, 4, 8 thru 10, 12 thru 37, 39 thru 42, 51 thru 63, & 67 thru 74)	X	1
4	A959-2	Cap (install using item 2)	X	1
5	B227-4	Dress Nut	X	1
6	B227-3	Lockwasher	X	1
7	B252-7	Bracket	X	1
8	B280-6	Switch Assembly (Incl items 5 and 6)	X	1
9	B252-8	Mount	X	1
10	B280-5	Switch Assembly (Incl items 5, 6, and 11)	X	1
11	B158-6	Heat Shrink	X	A/R
12	A765-2	Coupling	O	1
13	NAS1149D0616J	Washer (as required for shimming)	X	A/R
14	A141-16	Washer ([2] each, co-pilot and pilot stick)	X	4
15	A139-1	Bearing	X	5
16	04DU04	Bushing	X	1
17	A105-5	Journal	X	2
18	MS21042L08	Nut	X	7
19	NAS1149FN816P	Washer	X	5
20	F328-1	Connecting Rod	X	1
21	MS27039C0810	Screw	X	2
22	F764	Stick Weldment (Ref)		
23	MS16562-18	Spring Pin	X	2
24	MS20995C32	0.032 in. dia Safety Wire	X	A/R
25	A486-2	Screw	X	2
26	A325-3	Arm	X	1
27	A325-1	Arm	X	1
28	F654-1	Decal – “THROTTLE OPEN”	X	1
29	NAS1352-08LE8P	Screw	X	1
30	A332-2	Lever	X	1
31	MS27039C0806	Screw	X	3
32	A431-1	Knob	X	1
33	A654-7	Decal – “FRICTION INCREASE”	X	1
34	A141-20	Washer	X	2

NOTES

Continues

FIGURE AND INDEX NUMBER	PART NUMBER	DESCRIPTION	PARTS AVAIL	QTY PER ASSY
		COLLECTIVE STICK ASSEMBLY (Cont'd)		
67-21-35	A333-1	Stop	X	1
36	B0500-022-S	Belleville Washer	X	2
37	NAS1352-4-24P	Screw	X	1
38	NAS1149F0432P	Washer (or NAS1149F0463P to adjust axial play)	X	4
39	B330-7	Palnut	X	2
40	D210-3	Nut	X	4
41	NAS1149F0332P	Washer	X	7
42	A130-4	Spacer	X	1
43	F348-1	Anchor (Ref)		
44	NAS6603-5	Bolt	X	1
45	A959-1	Cap (install using item 2)	X	1
46	C758-2	Stick Assembly – Collective (LH [Co-pilot]; includes items 45, 47, and 48)	X	1
47	A654-6	Decal – "THROTTLE OPEN"	X	1
48	A654-21	Decal – "NO STOWAGE / KEEP AREA CLEAR"	X	1
49	V3-1	Switch (Hourmeter and Low RPM Warning, Ref; see Figure 96-23)		
50	C522-10	Control Cable (Ref, see Figure 76-1)		
51	AN742-3	Clamp	X	3
52	MS27039C1-07	Screw	X	3
53	B162-4	Clipnut	X	1
54	A105-6	Journal	X	1
55	NAS1149E0363R	Washer	X	1
56	A130-48	Spacer (install using item 57)	X	1
57	A257-1	Grease	X	A/R
58	A462-4	Fitting	X	1
59	NAS6604-11	Bolt	X	1
60	NAS1149F0432P	Washer	X	5
61	F303-1	Support Assembly	X	1
62	D210-4	Nut	X	3
63	B330-13	Palnut	X	3
64	C329-3	Bearing Block Assembly (Ref)		
65	F290-1	Seat Support Assembly (RH, forward; Ref)		
66	NAS6604-17	Bolt	X	1
67	B158-3	Heat Shrink	X	A/R

NOTES

Continues

FIGURE AND INDEX NUMBER	PART NUMBER	DESCRIPTION	PARTS AVAIL	QTY PER ASSY
		COLLECTIVE STICK ASSEMBLY (Cont'd)		
67-21-68	B263-18	Housing	X	1
	B263-1	Pin	X	5
69	MS24665-132	Cotter Pin	X	2
70	B774-4	Spring	X	2
71	MS20392-1C13	Pin	X	2
72	MS21266-1N	Grommet (install using item 73)	X	A/R
73	B270-8qt	Adhesive	X	A/R
74	NAS6604-9	Bolt	X	1
75	F121-1	Push-Pull Tube Assembly (Ref; see Figure 67-33)		

NOTES

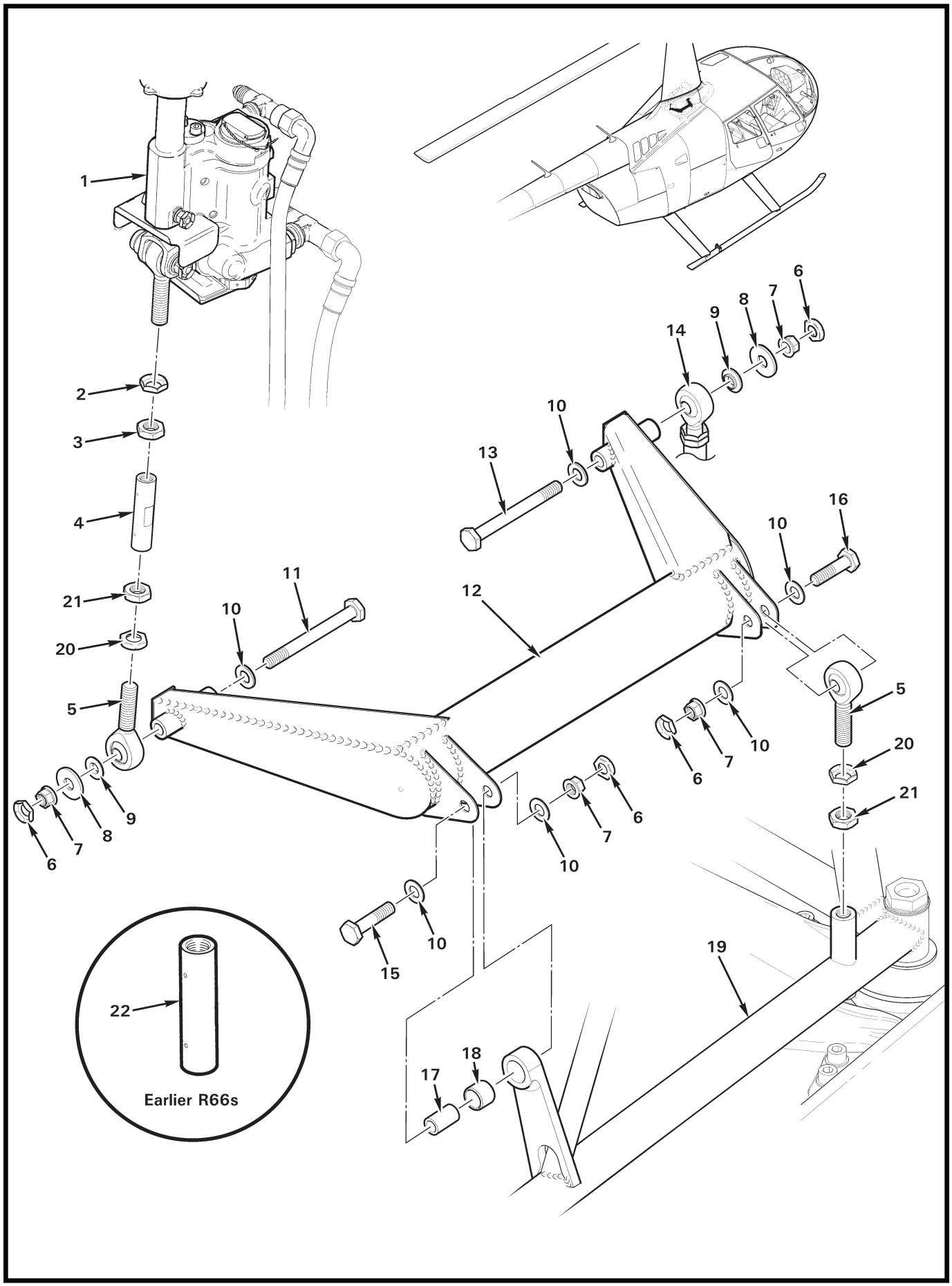
1
2
3
4
21
20
5
6
7
8
9
10
11
12
13
14
15
16
17
18
19
22
Earlier R66s

FIGURE AND INDEX NUMBER	PART NUMBER	DESCRIPTION	PARTS AVAIL	QTY PER ASSY
		JACKSHAFT WELDMENT INSTALLATION		
67-25-1	D212-6	Servo Assembly (aft, Ref; see Figure 29-11)		
2	B330-16	Palnut (Ref)		
3	AN316-5R	Nut (Ref)		
4	C343-8*	Tube (Revision O and subsequent)	X	1
5	B163-2	Rod End	X	2
6	B330-13	Palnut	X	4
7	D210-4	Nut	X	4
8	A214-3	Washer	X	2
9	A115-1	Spacer	X	2
10	NAS1149F0432P	Bolt	X	6
11	NAS6604-29	Bolt	X	1
12	F339-1	Jackshaft Weldment Assembly	X	1
13	NAS6604-33	Bolt	X	1
14	F121-7	Push-Pull Tube Assembly (Ref; see Figure 67-5)		
15	NAS6604-11	Bolt	X	1
16	NAS664-8	Bolt	X	1
17	A105-6	Journal	X	1
18	06DU06	Bearing (install bearing using wet primer)	X	1
19	G201-1	Frame Assembly – Hydraulic Servo Support (Ref)		
20	B330-16	Palnut	X	2
21	AN316-5R	Nut	X	2
22	C343-8	Tube (Ref; revision N and prior)		

NOTES * Apply B270-21 protectant to threads.

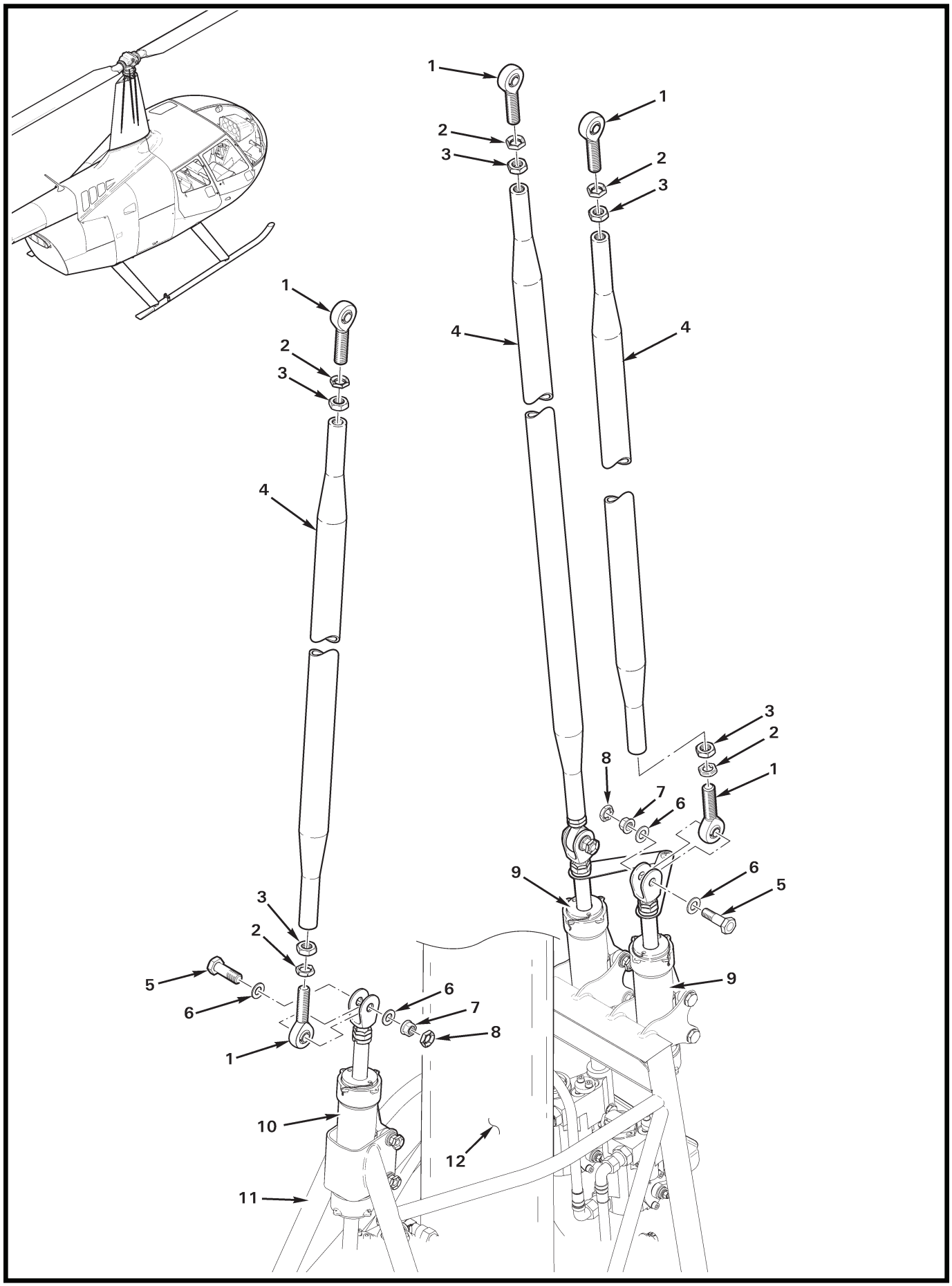
1
2
3
4
5
6
7
8
9
10
11
12

FIGURE AND INDEX NUMBER	PART NUMBER	DESCRIPTION	PARTS AVAIL	QTY PER ASSY
		PUSH-PULL TUBE ASSEMBLIES (UPPER)		
67-27-1	D173-2*	Rod End	X	2
2	B330-19	Palnut	X	2
3	AN316-6R	Nut	X	2
4	F121-3	Push-Pull Tube Assembly (Incl items 1 thru 3)	X	3
5	NAS6605-9	Bolt	X	3
6	NAS1149F0532P	Washer	X	6
7	D210-5	Nut	X	3
8	B330-16	Palnut	X	3
9	D212-5	Servo Assembly (Ref, forward)		
10	D212-6	Servo Assembly (Ref, aft)		
11	G201-1	Frame Assembly – Hydraulic Servo Support (Ref)		
12	F006	Main Rotor Gearbox Assembly (Ref)		

NOTES * Apply B270-21 protectant to threads.

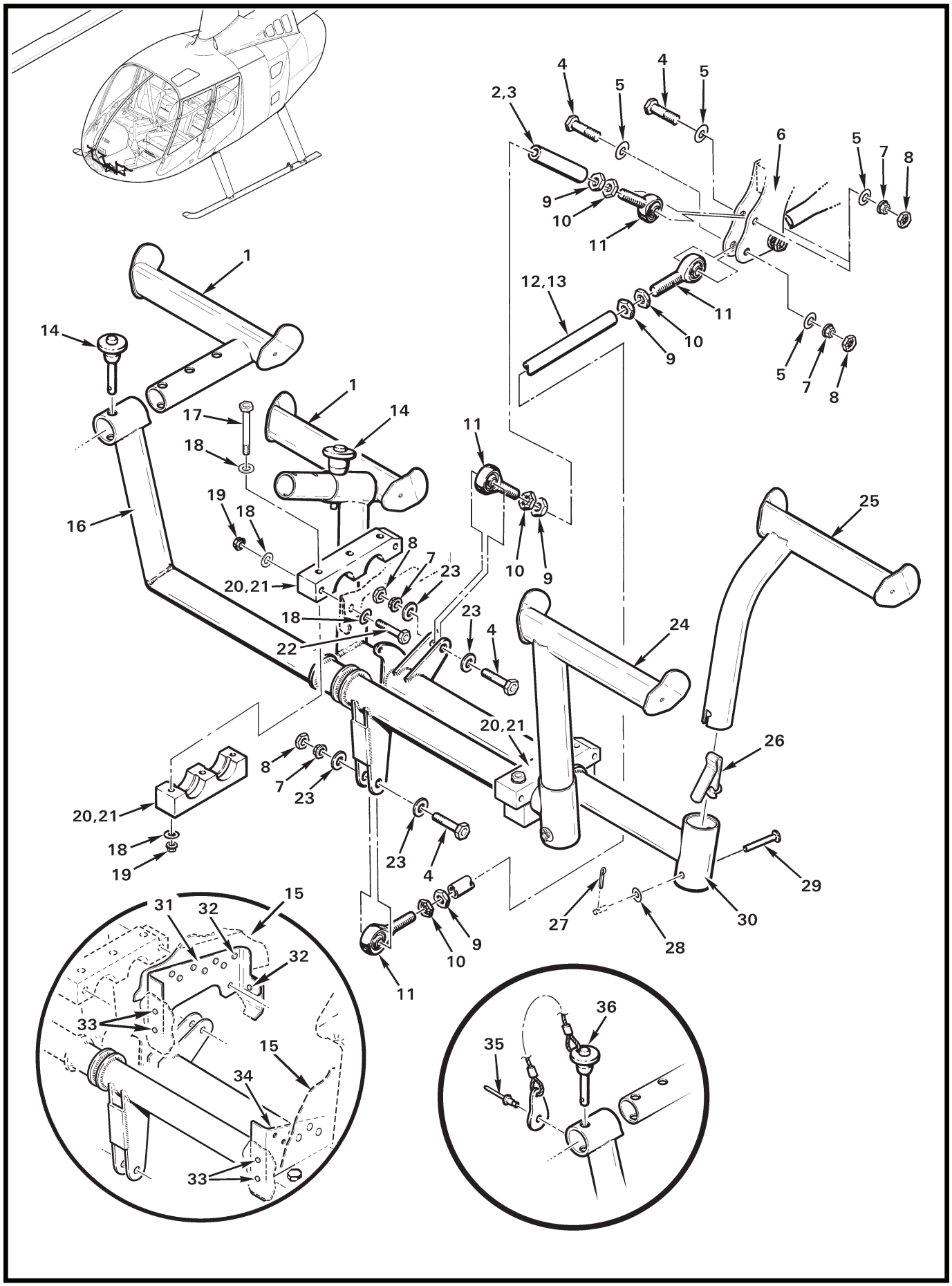
1
2,3
4
5
6
7
8
9
10
11
12,13
14
15
16
17
18
19
20,21
22
23
24
25
26
27
28
29
30
31
32
33
34
35
36

FIGURE AND INDEX NUMBER	PART NUMBER	DESCRIPTION	PARTS AVAIL	QTY PER ASSY
		TAIL ROTOR CONTROLS – ADJUSTABLE PEDALS		
67-29-1	F755-1	Pedal – Pilot Side (left and right foot)	X	2
2	C343-13*	Tube Assembly (Incl items 3, and 9 thru 11)	X	1
3	C343-14	Tube (Ref)		
4	NAS6604-9	Bolt	X	4
5	NAS1149FN432P	Washer	X	4
6	C317-9	Bellcrank Assembly (Ref; see Figure 67-35)		
7	D210-4	Nut	X	4
8	B330-13	Palnut	X	4
9	AN316-5R	Nut	X	2
10	B330-16	Palnut	X	2
11	A101-4	Rod End	X	2
12	C343-11**	Tube Assembly (Incl items 9 thru 11, and 13)	X	1
13	C343-12	Tube (Ref)		
14	B232-1	Pin (locking; button handle)	X	2
15	F033	Lower Console Assembly (Ref)		
16	D755-4	Pedal Assembly (right foot, includes items 14, and 27 thru 29)	X	1
17	NAS6603-20	Bolt	X	6
18	NAS1149FO332P	Washer	X	20
19	D210-3	Nut	X	14
20	A318-1-2	Bearing Block Set (install using item 21 in grooves)	X	1
21	A257-1	Grease	X	A/R
22	NAS6603-13	Bolt	X	4
23	NAS1149F0436P	Washer	X	4
24	F755-3	Pedal Assembly – Co-Pilot (right foot, includes item 26)	X	1
	F755-10	Pedal Assembly – Short Co-Pilot (right foot, includes item 26)	X	1
25	F755-2	Pedal Assembly – Co-Pilot (left foot, includes item 26)	X	1
	F755-9	Pedal Assembly – Short Co-Pilot (left foot, includes item 26)	X	1
26	A795-4	Pin	X	2
27	MS24665-132	Cotter Pin	X	2
28	NAS1149D0316J	Washer (or AN960PD10L)	X	2
29	MS20392-2C33	Flathead Pin	X	2
30	D755-1	Pedal Assembly (left foot, includes items 14, and 27 thru 29)	X	1
31	A359-2	Support – RH	X	1
32	MS20470AD4	Rivet	X	20
33	MS20470AD3	Rivet	X	4

NOTES * 5.30-inch nominal center to center. Apply B270-21 protectant to threads.

** 5.82-inch nominal center to center. Apply B270-21 protectant to threads.

Continues

FIGURE AND INDEX NUMBER	PART NUMBER	DESCRIPTION	PARTS AVAIL	QTY PER ASSY
		TAIL ROTOR CONTROLS – ADJUSTABLE PEDALS (Cont'd)		
67-29-34	A359-1	Support – LH	X	1
35	NAS9301B-4-02	Rivet	X	2
36	B232-3	Pin (Locking; button handle with lanyard and tab. Ref; to replace, order item 14.)	O	2

NOTES

Intentionally Blank

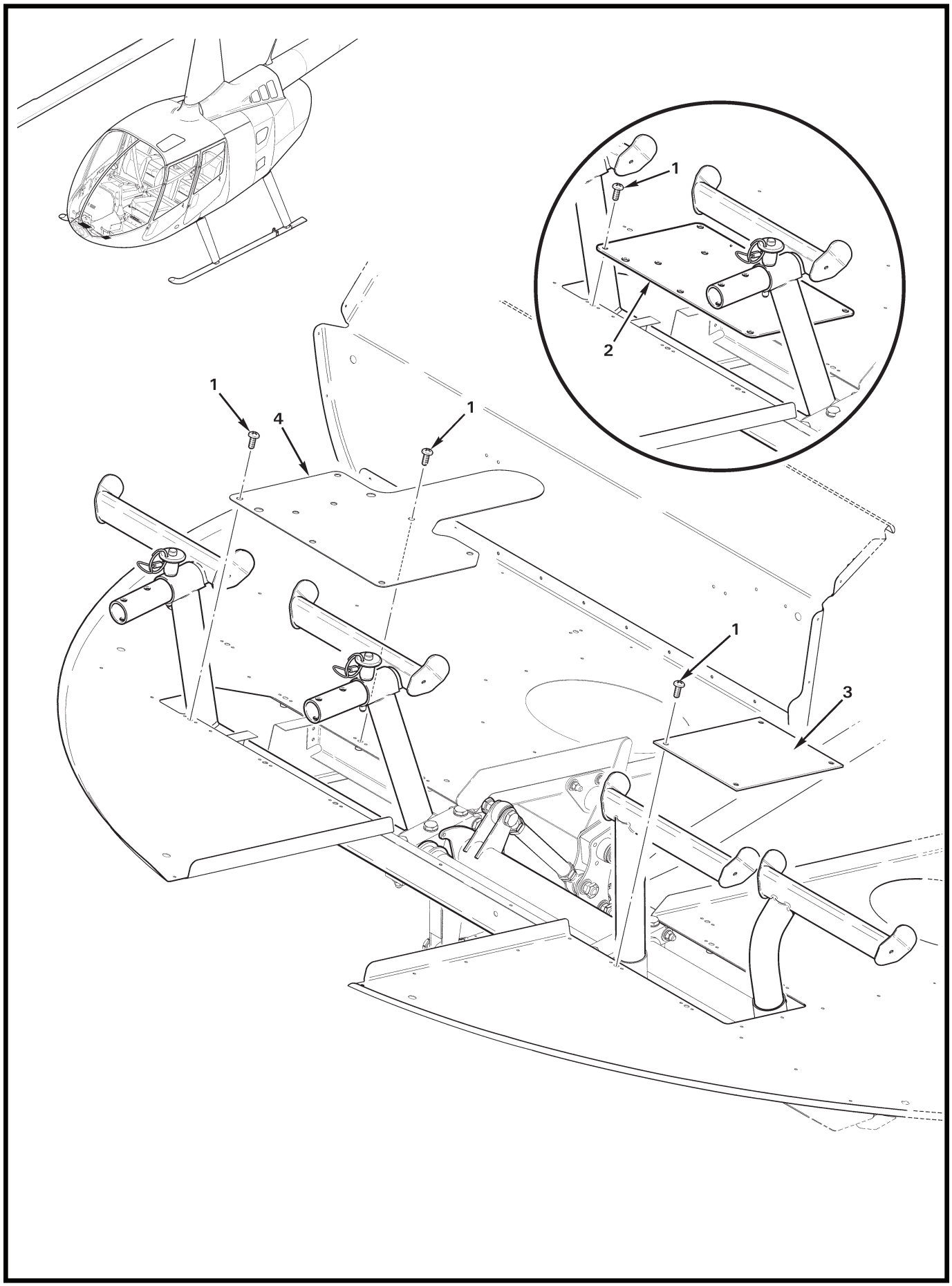
1
2
1
4
1
1
3

FIGURE AND INDEX NUMBER	PART NUMBER	DESCRIPTION	PARTS AVAIL	QTY PER ASSY
		TAIL ROTOR CONTROLS - PEDAL COVER INSTALLATION		
67-31-1	MS27039C0806	Screw	X	12
2	A412-3	Cover – Pedals (RH; earlier helicopters)	X	1
3	A412-1	Cover – Pedals (LH)	X	1
4	A412-4	Cover – Pedals (RH, with tab. Replaces item 2.)	X	1

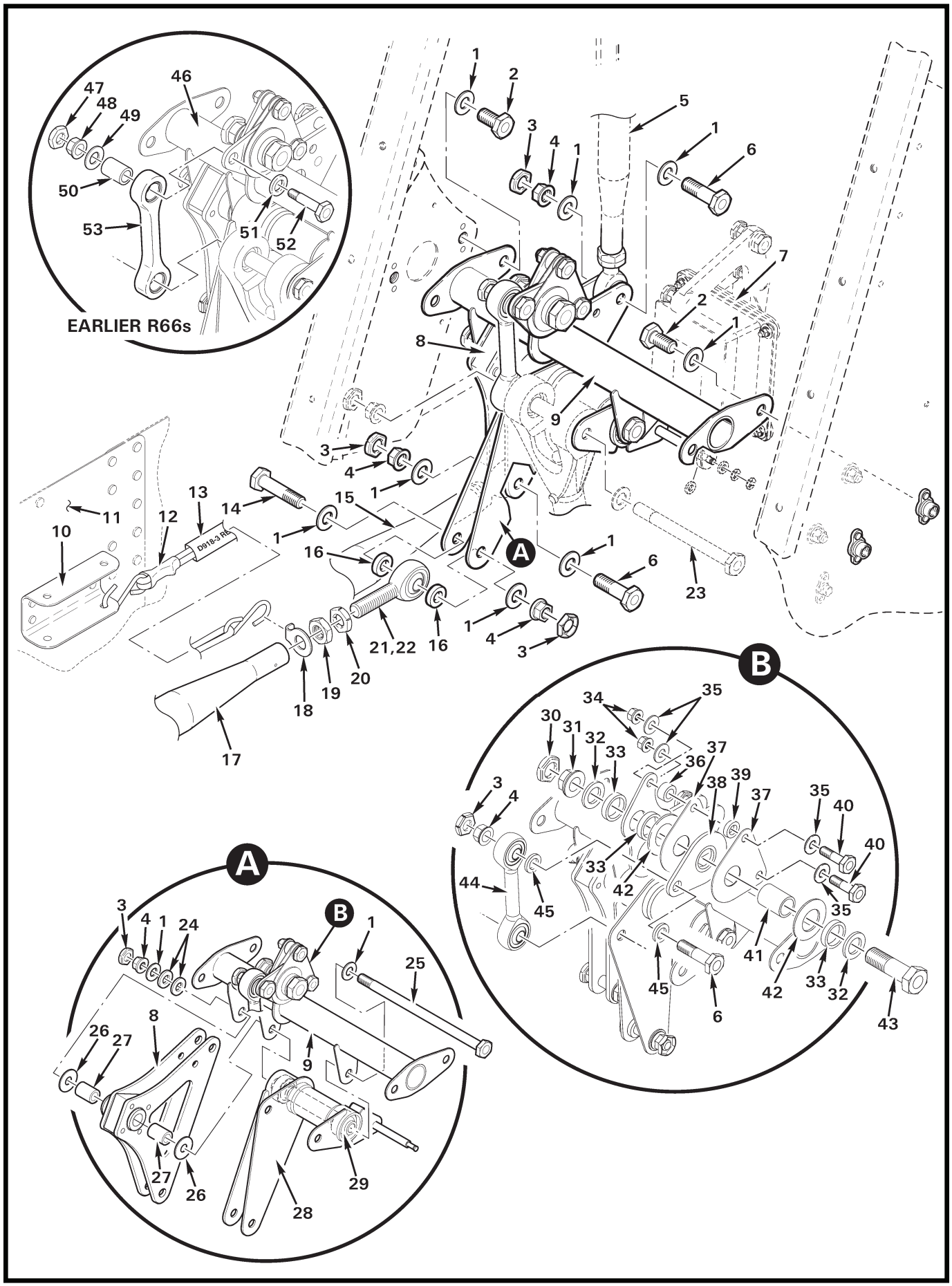
EARLIER R66s
D918-3 RE
A
B

FIGURE AND INDEX NUMBER	PART NUMBER	DESCRIPTION	PARTS AVAIL	QTY PER ASSY
		F334 SUPPORT ASSEMBLY INSTALLATION		
67-33-1	NAS1149F0432P	Washer	X	12
2	NAS6604-2	Bolt	X	4
3	B330-13	Palnut	X	5
4	D210-4	Nut	X	5
5	F121-11	Push Pull Tube Assembly (Ref)		
6	NAS6604-9	Bolt	X	3
7	F334-2	Actuator Assembly (Ref; see Figure 76-7)		
8	C317-7	Bellcrank	X	1
9	F334-3	Aft Support Assembly (Incl items 3, 4, 6, 8, 14, 16, and 24 thru 45)	X	1
10	A697-3	Anchor (Ref)		
11	F293-2	Keel Panel (forward, Ref)		
12	D918-3	Elastic cord Assembly (6 lb ±0.25)	X	1
13	B158-6	Heat Shrink (labeled "D918-3 Rev...")	X	A/R
14	NAS6604-11	Bolt	X	1
15	F121-9	Push-Pull Tube Assembly (Ref)		
16	A130-47	Spacer	X	2
17	F121-1	Push-Pull Tube Assembly (Incl items 18 thru 22)	X	1
18	A697-6	Tab	X	1
19	AN316-5R	Nut	X	2
20	B330-16	Palnut	X	2
21	A101-4	Rod End (install using item 22 on threads)	X	2
22	B270-21	Protectant	X	A/R
23	NAS6604-37	Bolt (Ref; see Figure 67-5)		
24	NAS1149F0463P	Washer	X	2
25	NAS6604-67	Bolt	X	1
26	A141-3	Washer	X	2
27	A105-3	Journal	X	2
28	F326-1	Bellcrank Weldment (Ref)		
29	B303-1	Bearing (Ref)		
30	B330-19	Palnut	X	1
31	D210-6	Nut	X	1
32	NAS1149F0663P	Washer	X	2
33	C130-25	Spacer	X	3
34	D210-3	Nut	X	2

NOTES

Continues

FIGURE AND INDEX NUMBER	PART NUMBER	DESCRIPTION	PARTS AVAIL	QTY PER ASSY
		F334 SUPPORT ASSEMBLY INSTALLATION (Cont'd)		
67-33-35	NAS1149F0332P	Washer	X	4
36	A130-21	Spacer	X	2
37	D336-1	Plate	X	2
38	B249-6	Arm Assembly	X	1
39	C130-24	Spacer	X	2
40	NAS6603-6	Bolt	X	2
41	B250-13	Journal	X	1
42	A478-4	Spring Washer (install with concave towards item 38)	X	2
43	NAS6606-11	Bolt	X	1
44	B345-3	Link	X	1
45	A141-11	Washer	X	2
46	F334-1	Aft Support Assembly (Incl items 8, 14, 16, 24 thru 43, and 47 thru 53. No longer available. Superseded by item 9.)	O	1
47	B330-13	Palnut	X	1
48	D210-4	Nut	X	1
49	NAS1149F0432P	Washer	X	1
50	A105-3	Journal	X	1
51	A141-11	Washer	X	1
52	NAS6604-9	Bolt	X	1
53	C327-1	Link Assembly (No longer available. Superseded by item 44.)	O	1

NOTES

Intentionally Blank

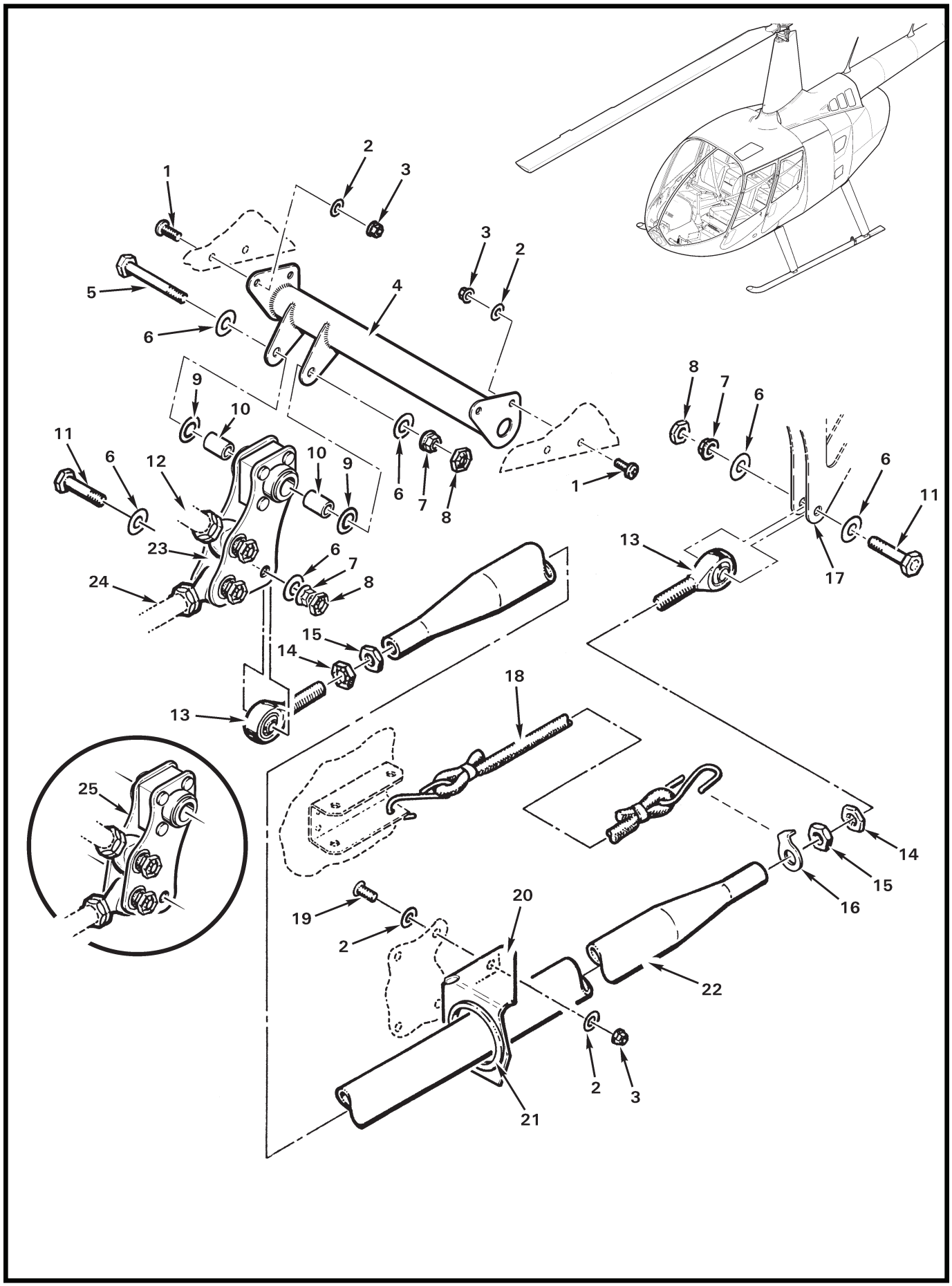
1
2
3
4
5
6
7
8
9
10
11
12
13
14
15
16
17
18
19
20
21
22
23
24
25

FIGURE AND INDEX NUMBER	PART NUMBER	DESCRIPTION	PARTS AVAIL	QTY PER ASSY
		C317 BELLCRANK ASSEMBLY		
67-35-1	MS27039C0807	Screw	X	4
2	NAS1149FN832P	Washer	X	12
3	MS21042L08	Nut	X	8
4	F349-1	Support Assembly	X	1
5	NAS6604-19	Bolt	X	1
6	NAS1149F0432P	Washer	X	8
7	D210-4	Nut	X	4
8	B330-13	Palnut	X	4
9	A141-3	Washer	X	2
10	A105-3	Journal	X	2
11	NAS6604-9	Bolt	X	3
12	C343-13	Push-Pull Tube Assembly (Ref, see Figure 67-29)		
13	A101-4	Rod End	X	2
14	B330-16	Palnut	X	2
15	AN316-5R	Nut	X	2
16	A697-6	Tab	X	1
17	C317-7	Bellcrank Assembly (Ref, revision H and subsequent. See also Figure 67-33.)		
18	A918-1	Elastic Cord Assembly (6 lb)	X	1
	A918-2	Elastic Cord Assembly (8 lb)	X	1
	A918-3	Elastic Cord Assembly (10 lb)	X	1
	A918-4	Elastic Cord Assembly (12 lb)	X	1
	A918-5	Elastic Cord Assembly (14 lb)	X	1
	A918-6	Elastic Cord Assembly (16 lb)	X	1
	A918-7	Elastic Cord Assembly (18 lb)	X	1
	A918-8	Elastic Cord Assembly (20 lb)	X	1
19	MS27039C0806	Screw	X	4
20	C346-1	Restraint	X	1
21	NAS557-22A	Grommet	X	1
22	F121-9	Push-Pull Tube Assembly (Incl items 13 thru 16)	X	1
23	C317-9	Bellcrank Assembly (Must be used only with item 17, revision "H" and subsequent, and item 25 from Figure 67-37.)	X	1
24	C343-11	Push-Pull Tube Assembly (Ref, see Figure 67-29)		
25	C317-5	Bellcrank Assembly (For earlier R66's. Superseded by item 23.)	X	1

NOTES

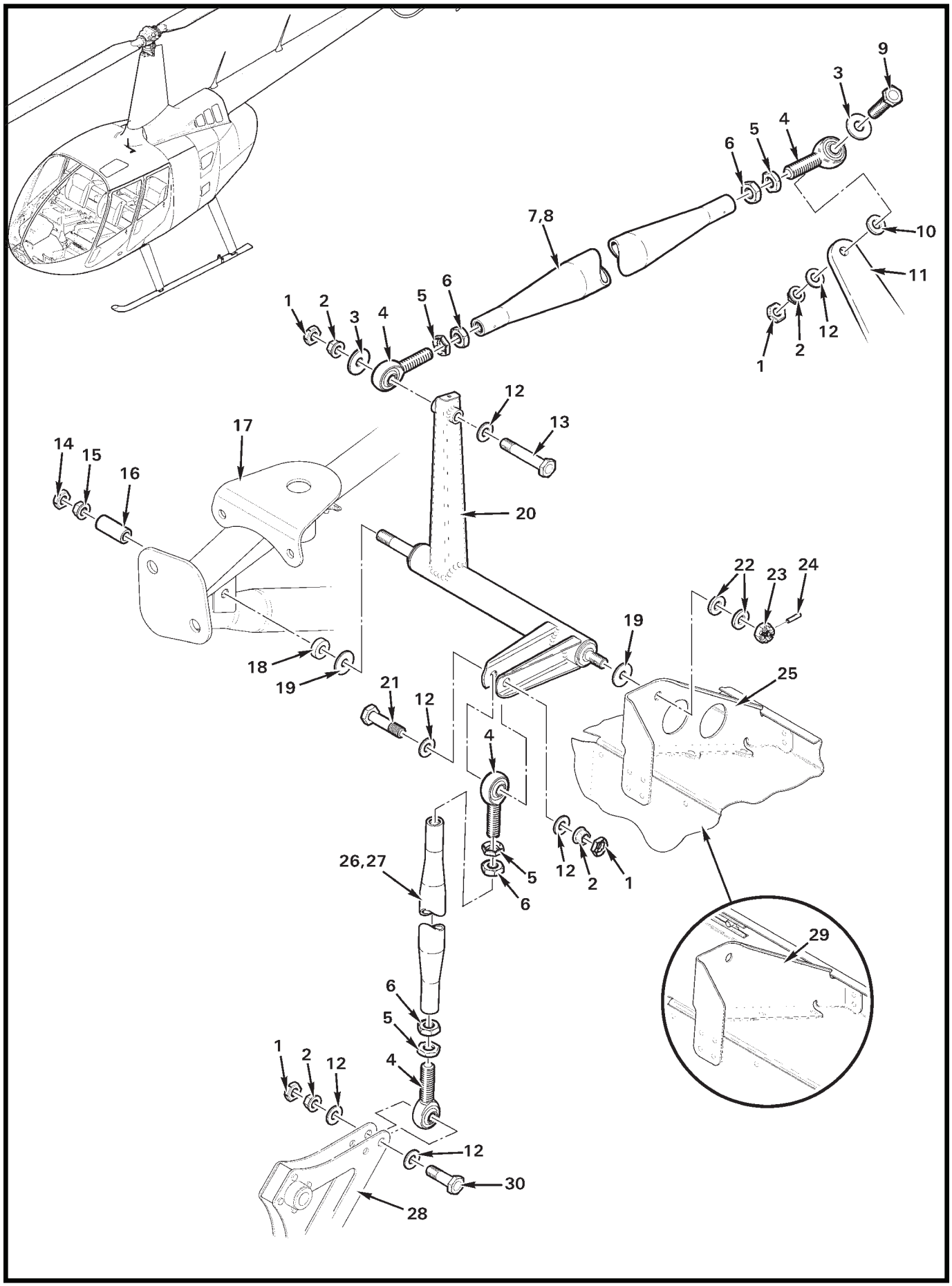

FIGURE 67-37 F316 BELLCRANK ASSEMBLY

FIGURE AND INDEX NUMBER	PART NUMBER	DESCRIPTION	PARTS AVAIL	QTY PER ASSY
		F316 BELLCRANK ASSEMBLY		
67-37-1	B330-13	Palnut	X	4
2	D210-4	Nut	X	4
3	A214-3	Washer	X	2
4	A101-4	Rod End	X	2
5	B330-16	Palnut	X	2
6	AN316-5R	Nut	X	2
7	F121-13	Push-Pull Tube Assembly (Incl items 3 thru 6)	X	1
8	F121-14	Tube (Ref)		
9	NAS6604-11	Bolt	X	1
10	MS20002-4	Washer	X	1
11	A331-4	Bellcrank Assembly (Ref, see Figure 67-39)		
12	NAS1149F0432P	Washer	X	6
13	NAS6604-21	Bolt	X	1
14	B330-13	Palnut	X	1
15	D210-4	Nut	X	1
16	C130-34	Spacer	X	1
17	F020	Frame Assembly (Ref)		
18	A130-42	Spacer	X	1
19	A141-3	Washer	X	2
20	F316-1	Bellcrank Assembly (Incl items 14 thru 16, 18, 19, and 22 thru 24)	X	1
21	NAS6604-8	Bolt	X	1
22	NAS1149F0463P	Washer	X	2
23	MS17825-4	Nut	X	1
24	MS16562-14	Spring Pin	X	1
25	G247-1	Support Assembly (revision “C” and subsequent)	O	1
26	F121-11	Push-Pull Tube Assembly (Incl items 4 thru 6, and 26)	X	1
27	F121-12	Tube (Ref)		
28	C317-7	Bellcrank Assembly (Ref, see Figure 67-33)		
29	G247-1	Support Assembly (Ref, revision “B” and prior, earlier R66s. Superseded by item 25.)		
30	NAS6604-9	Bolt	X	1

NOTES

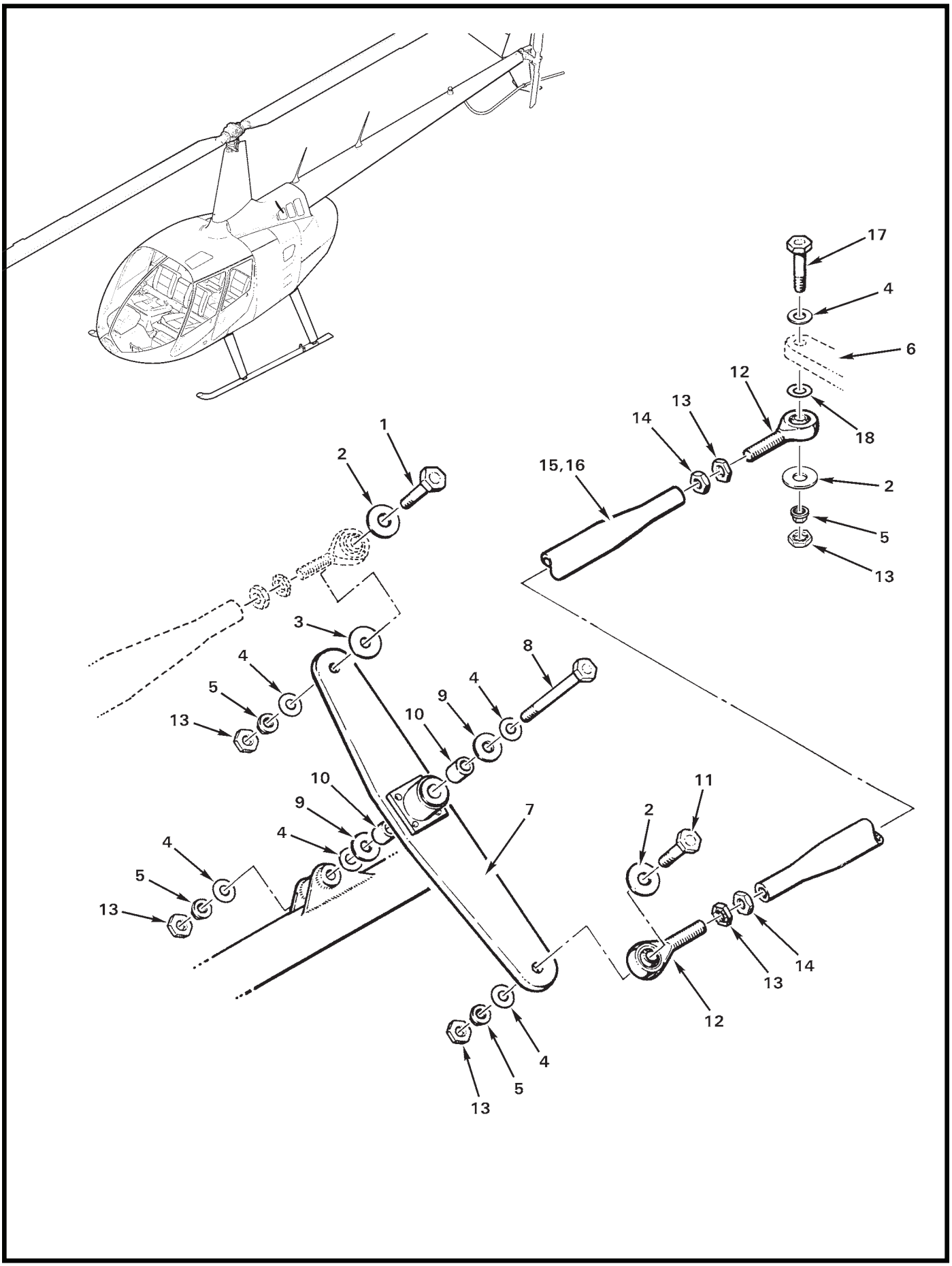
17
4
6
12
13
14
18
1
2
15,16
2
5
13
3
8
4
5
4
9
13
10
10
11
9
7
2
4
4
5
13
14
13
12
4
5
13

FIGURE AND INDEX NUMBER	PART NUMBER	DESCRIPTION	PARTS AVAIL	QTY PER ASSY
		A331 BELLCRANK ASSEMBLY		
67-39-1	NAS6604-11	Bolt	X	1
2	A214-3	Washer	X	3
3	MS20002-4	Washer	X	1
4	NAS1149F0432P	Washer	X	6
5	D210-4	Nut	X	4
6	A120-5	Bellcrank (ref)		
7	A331-4	Bellcrank Assembly	X	1
8	NAS6604-35	Bolt	X	1
9	A141-3	Washer	X	2
10	A105-3	Journal	X	2
11	NAS6604-9	Bolt	X	1
12	A127-4	Rod End	X	2
13	B330-13	Stamped Nut	X	6
14	AN316-4R	Nut	X	2
15	C121-17	Push-Pull Tube Assembly (incl items 12 thru 14, and 16)	X	1
16	C121-18	Tube (ref)		
17	NAS6604-10	Bolt	X	1
18	NAS1149F0432P	Washer (or NAS1149F0463P as required for minimum clearance)	X	A/R

NOTES

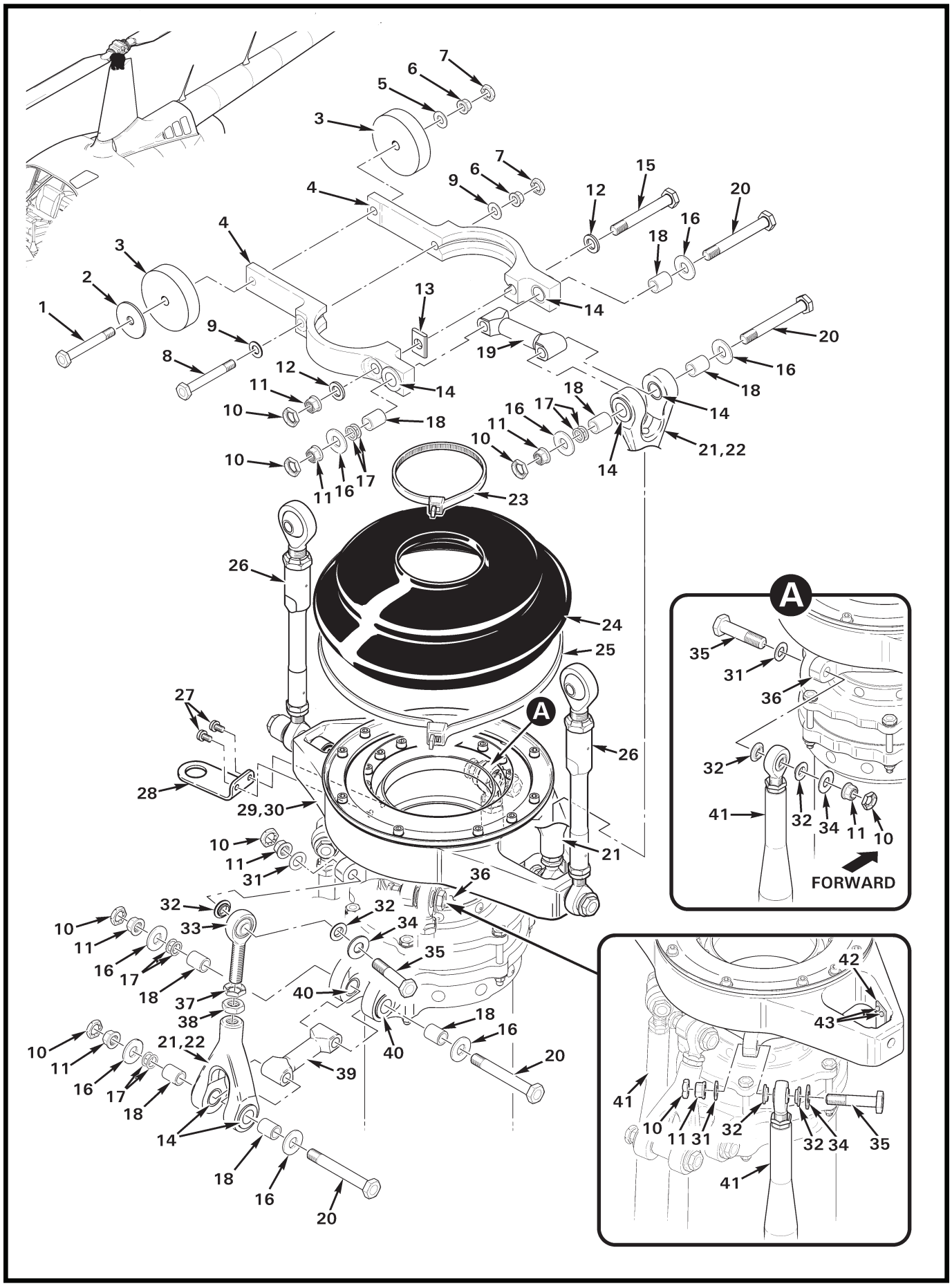
A
FORWARD

FIGURE AND INDEX NUMBER	PART NUMBER	DESCRIPTION	PARTS AVAIL	QTY PER ASSY
		C017-6 SWASHPLATE INSTALLATION		
67-41-1	NAS6604-24	Bolt (Select bolt length which, after correct torque is applied, exposes 2 to 4 threads beyond nut.)	X	1
2	AN970-4*	Washer (A/R for balance)	X	A/R
3	A255-1*	Counter Weight (1.10 in. O.D.)	X	A/R
	A255-2*	Counter Weight (1.90 in. O.D.)	X	A/R
4	C203-5	Yoke Assembly (includes item 14[1])	X	2
5	NAS1149F0432P	Washer (or NAS1149F0463P as required for proper thread engagement)	X	A/R
6	D210-4	Nut	X	2
7	B330-13	Stamped Nut	X	2
8	NAS6604-24	Bolt	X	1
9	NAS1149F0432P	Washer	X	2
10	B330-16	Stamped Nut	X	9
11	D210-5	Nut	X	9
12	NAS1149F0563P	Washer	X	2
13	A210-1	Key	X	1
14	C648-2	Bearing – Journal (install wet; see R66 MM § 20-75 for approved primer)	X	6
15	NAS6605-28	Bolt	X	1
16	C141-19	Washer	X	8
17	C117-67	Shim (thickness = 0.016 in.)	X	A/R
	C117-68	Shim (thickness = 0.020 in.)	X	A/R
	C117-69	Shim (thickness = 0.025 in.)	X	A/R
18	C105-6	Journal (length = 0.526 in.)	X	8
19	C204-3	Arm (upper; 2.870 inches long)	X	1
20	NAS6605-31	Bolt	X	4
21	A205-7	Fork Assembly (includes item 14 [2]; see Figure 67-43B or 67-43D.)	X	2
22	B270-13	Sealant (to fill cavity in item 21)	X	A/R
23	MS3367-7-0	Ty-Rap	X	1
24	C480-1	Boot	X	1
25	MS3367-6-0	Ty-Rap	X	1
26	C258-8**	Pitch Link Assembly (ref)		
27	NAS1352N08-4	Screw	X	2
28	B769-2	Bracket	X	1

NOTES * For main rotor balance adjustment, refer to R66 MM § 18-14 Part C.

** C258-8 shown; see Figure 67-43B. C258-5 & -1 not shown; see Figure 67-43D.

Continues

FIGURE AND INDEX NUMBER	PART NUMBER	DESCRIPTION	PARTS AVAIL	QTY PER ASSY
		C017-6 SWASHPLATE INSTALLATION (Cont'd)		
67-41-29	C017-6	Swashplate Assembly (incl items 27, 28, 30, 36, 42, 43, and 44)	X	1
	C017-6R	C017-6 Swashplate Assembly (overhaul exchange; requires core deposit)	X	1
30	C199-2	Swashplate Assembly – Upper (ref)		
31	NAS1149F0532P	Washer	X	4
32	C115-1	Spacer	X	8
33	D173-3*	Rod End	X	1
34	C141-1	Washer	X	4
35	NAS6605-17	Bolt	X	4
36	F198-1	Swashplate Assembly – Lower (ref)		
37	B330-19	Stamped Nut	X	1
38	AN316-6R	Nut	X	1
39	C204-2	Arm – Lower (2.520 inches long)	X	1
40	C648-2	Bearing (ref)		
41	F121-3	Push-Pull Tube Assembly (ref; see Figure 67-27.)		
42	C769-2	Interrupter	X	1
43	MS20470AD3	Rivet	X	2
44	C647-12	Bearing Set (life-limited component, see R66 MM § 4-10; not shown)	O	1
		* * *		
45	KI-6604	R44-series & R66 C017-5 Swashplate Installation Parts Kit Instructions (Contains parts to install C017-6 swashplate assembly and supersedes R7983 kit. Does not include swashplate or C284 tube assembly.)	X	A/R

NOTES * Apply B270-21 Protectant to threads before installing in item 21.

Intentionally Blank

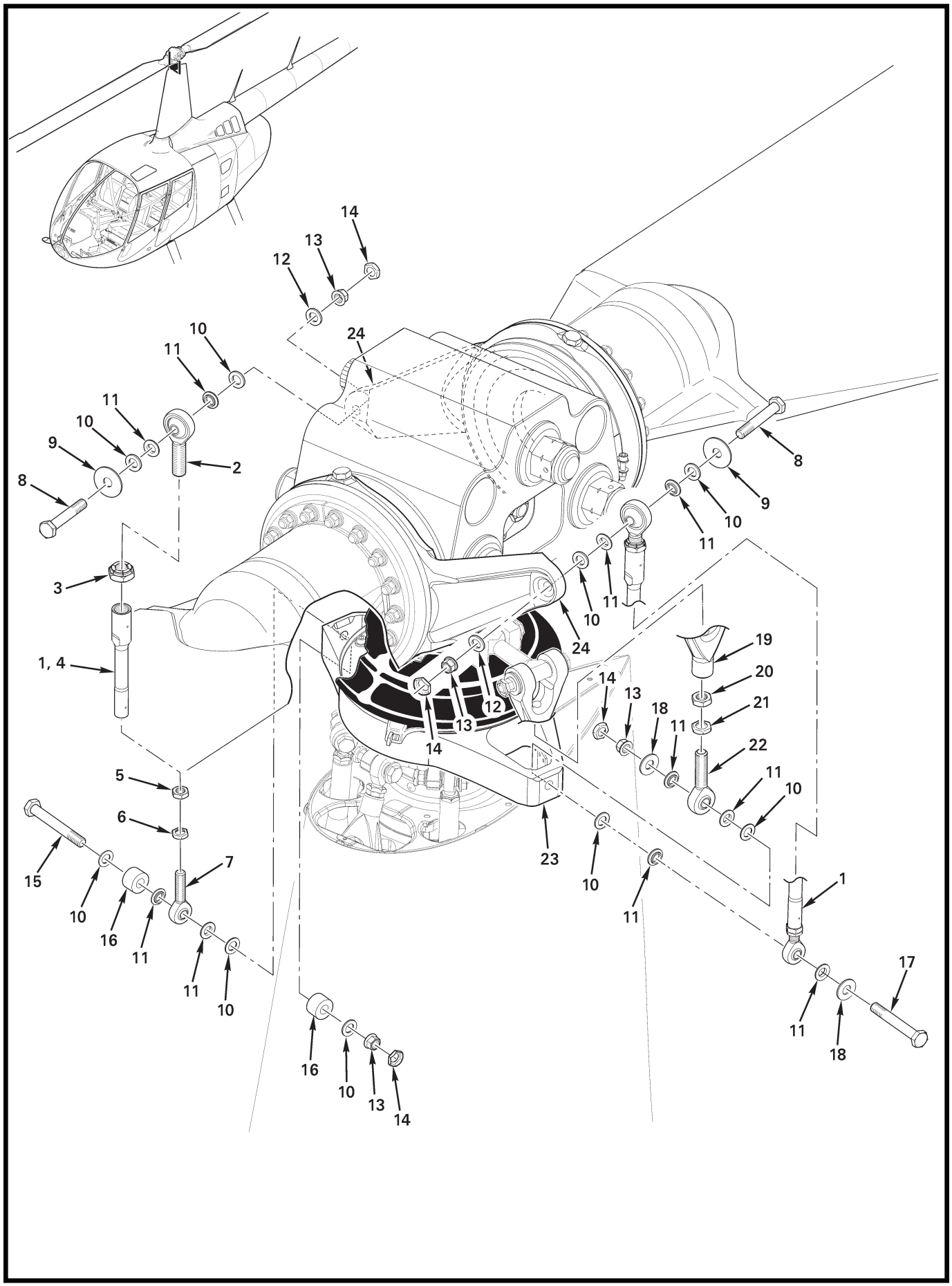
14
13
12
10
11
24
11
10
9
2
8
8
9
10
11
3
10
11
24
1, 4
19
20
14
13
21
18
11
12
13
14
22
5
11
10
6
23
10
15
7
10
1
16
11
11
17
11
10
11
18
16
10
13
14

FIGURE AND INDEX NUMBER	PART NUMBER	DESCRIPTION	PARTS AVAIL	QTY PER ASSY
		C258-8 PITCH LINK INSTALLATION*		
67-43B-1	C258-8*	Pitch Link Assembly (incl items 2 thru 7)	X	2
2	D173-6**	Rod end	X	2
3	21FKF-813	Nut (alternate part no. 27FKF-813)	X	2
4	C258-6	Barrel Assembly	X	2
5	AN316-6R	Nut	X	2
6	B330-19	Stamped Nut	X	2
7	D173-3**	Rod end	X	2
8	NAS6605-23	Bolt	X	2
9	C141-27	Washer	X	2
10	NAS1149F0532P	Washer	X	9
11	C115-1	Spacer	X	10
12	NAS1149F0563P	Washer	X	2
13	D210-5	Nut	X	4
14	B330-16	Stamped Nut	X	4
15	NAS6605-31	Bolt	X	1
16	A255-3	Counterweight	X	2
17	NAS6605-28	Bolt	X	1
18	C141-1	Washer	X	2
19	A205-7	Fork Assembly (ref; includes items 20 thru 22. Install on interrupter-side swashplate ear)		
20	AN316-6R	Nut	X	1
21	B330-19	Stamped Nut	X	1
22	D173-3***	Rod end	X	1
23	C017-6	Swashplate Assembly (ref)		
24	C157-3	Pitch Horn (ref)		

NOTES
* Must be installed in pairs; refer to R66 Service Letter SL-54.
** Apply A257-2 or A257-22 oil to threads before installing in item 4.
*** Apply B270-21 Protectant to threads before installing in item 19.

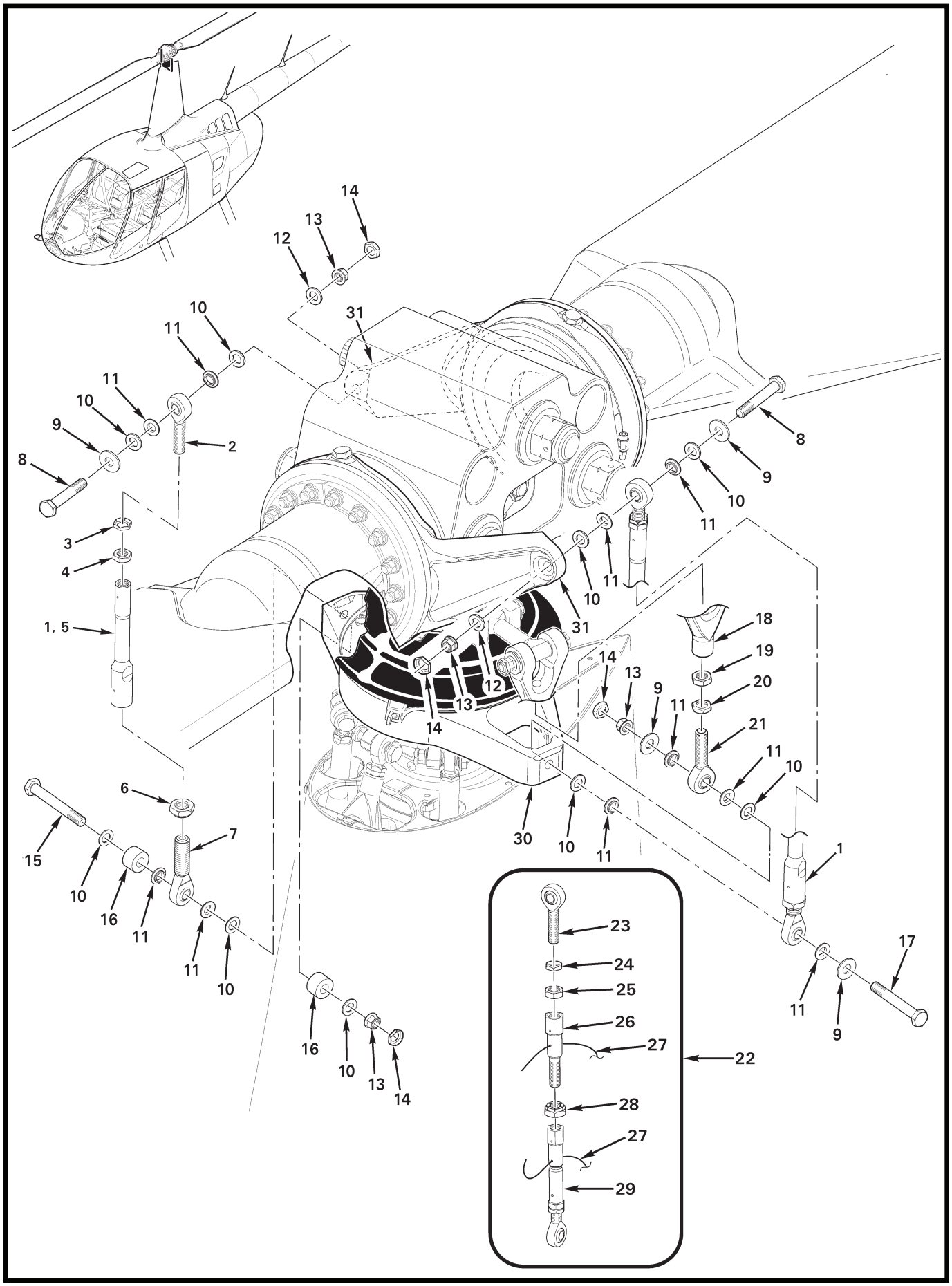
14
13
12
10
11
31
11
10
9
2
8
8
9
10
11
3
4
10
11
31
1, 5
18
19
20
14
13
9
11
12
13
14
21
11
10
6
7
15
10
16
11
11
10
30
10
11
1
23
24
25
26
27
22
28
27
29
17
11
9
16
10
13
14

FIGURE AND INDEX NUMBER	PART NUMBER	DESCRIPTION	PARTS AVAIL	QTY PER ASSY
		C258-5 & C258-1 PITCH LINK INSTALLATION*		
67-43D-1	C258-5*	Pitch Link Assembly (incl items 2 thru 7)	X	2
2	D173-3**	Rod End	X	2
3	B330-19	Stamped Nut	X	2
4	AN316-6R	Nut	X	2
5	C258-6	Barrel Assembly	X	2
6	21FKF-813	Nut (alternate part no. 27FKF-813)	X	2
7	D173-4**	Rod End	X	2
8	NAS6605-18	Bolt	X	2
9	C141-1	Washer	X	4
10	NAS1149F0532P	Washer	X	9
11	C115-1	Spacer	X	10
12	NAS1149F0563P	Washer	X	2
13	D210-5	Nut	X	4
14	B330-16	Stamped Nut	X	4
15	NAS6605-31	Bolt	X	1
16	A255-3	Counterweight	X	2
17	NAS6605-28	Bolt	X	1
18	A205-7	Fork Assembly (ref; includes items 19 thru 21. Install on interrupter-side swashplate ear)	X	1
19	AN316-6R	Nut	X	1
20	B330-19	Stamped Nut	X	1
21	D173-3***	Rod End	X	1
22	C258-1*	Pitch Link Assembly (incl items 23 thru 26, 28 & 29)	O	2
23	D173-3**	Rod End	X	2
24	B330-19	Stamped Nut	X	2
25	AN316-6R	Nut	X	2
26	C258-2	Fitting	X	2
27	MS20995C32	0.032 in. dia. safety wire	X	A/R
28	21FKF-813	Nut (alternate part no. 27FKF-813)	X	2
29	C258-4	Link Assembly	X	2
30	C017-6	Swashplate Assembly (ref)		
31	C157-3	Pitch Horn (ref)		

NOTES
* C258-5 & -1 Pitch Link Assemblies may be installed singly or in pairs; refer to R66 Service Letter SL-54. When no longer available, replace both with (2) C258-8 Pitch Link Assemblies per Figure 67-43B.
** Apply A257-2 or A257-22 oil to threads before installing in item 5.
*** Apply B270-21 Protectant to threads before installing in item 18.

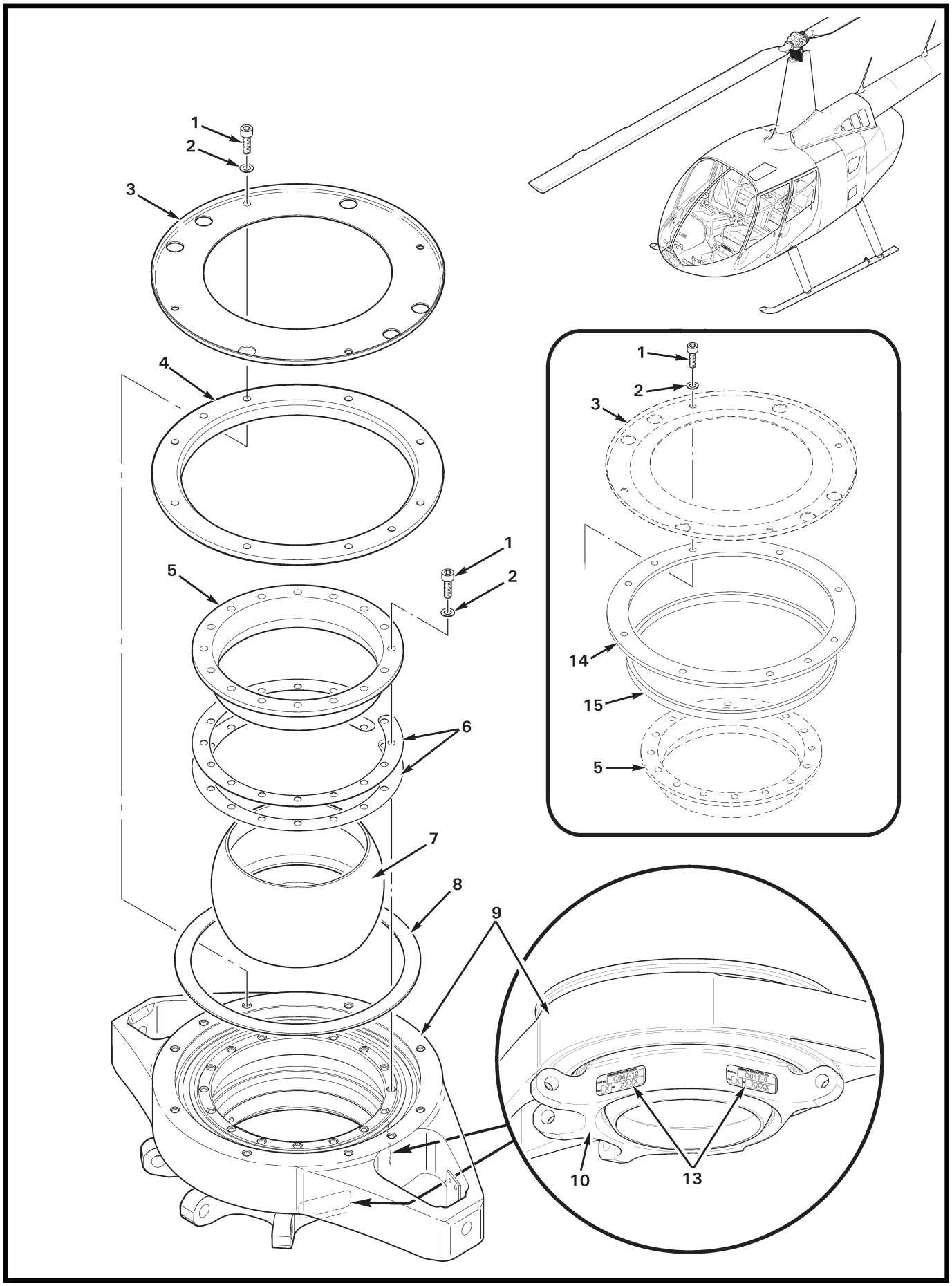

FIGURE 67-45 SWASHPLATE BALL INSTALLATION
(C017 REVISION AD & SUBSEQUENT)

FIGURE AND INDEX NUMBER	PART NUMBER	DESCRIPTION	PARTS AVAIL	QTY PER ASSY
		SWASHPLATE BALL INSTALLATION (C017 REVISION AD & SUBSEQUENT)		
67-45-1	NAS1352N08-8	Screw (install using item 11 on threads)	X	26
2	NAS620-8L	Washer	X	26
3	C206-2	Retainer	X	1
4	C200-4	Retainer (supersedes items 14 and 15)	X	1
5	C205-1	Sleeve Assembly	X	1
6	C197-1	Spacer (thickness = 0.016 in.)	X	A/R
	C197-2	Spacer (thickness = 0.020 in.)	X	A/R
	C197-3	Spacer (thickness = 0.025 in.)	X	A/R
	C197-4	Spacer (thickness = 0.032 in.)	X	A/R
	C197-5	Spacer (thickness = 0.040 in.)	X	A/R
	C197-6	Spacer (thickness = 0.050 in.)	X	A/R
7	C201-1	Ball Assembly	X	1
8	C217-1	Seal (upper)	X	1
9	C199-2	Swashplate Assembly – Upper (Ref)		
10	F198-1	Swashplate Assembly – Lower (Ref)		
11	A257-9	Anti-Seize	X	A/R
12	C647-12	Bearing Set – Swashplate (Ref; connects items 9 and 10; not shown)		
	A257-3	Grease (pack bearing set with grease per MM § 12-90)	X	A/R
13	—	Identification Plate* (C017-6 Assembly, and C647-12 bearing set; part number, revision letter and serial number)	O	2
14	C200-3**	Retainer	X	1
15	C219-3**	Spacer	X	1

NOTES * Refer to MM § 20-93 for replacement procedures.

** Superseded by item 4.

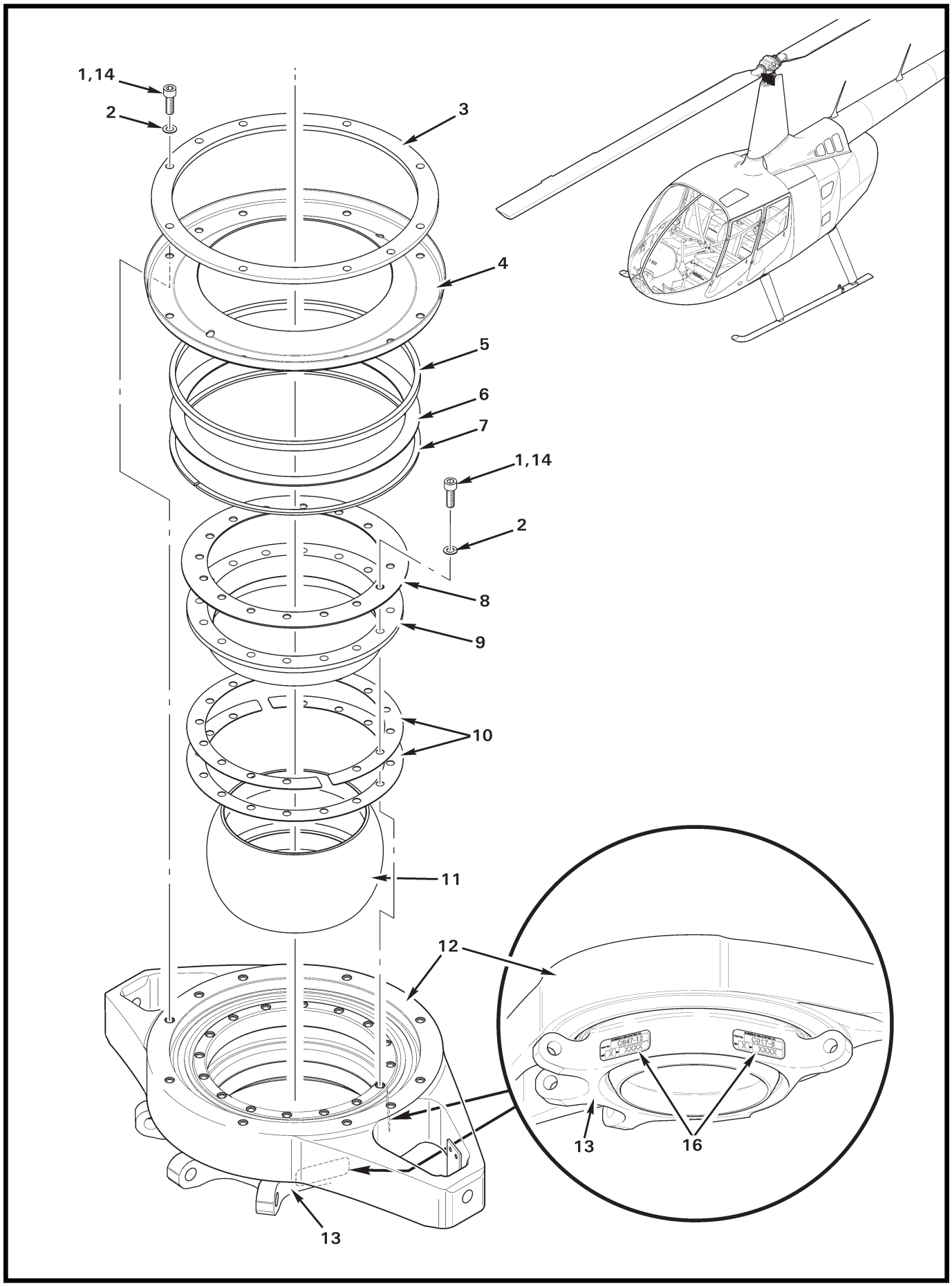

FIGURE 67-47 SWASHPLATE BALL INSTALLATION
(C017 REVISION AA THRU AC)

FIGURE AND INDEX NUMBER	PART NUMBER	DESCRIPTION	PARTS AVAIL	QTY PER ASSY
		SWASHPLATE BALL INSTALLATION (C017 REVISION AA THRU AC)		
67-47-1	NAS1352N08-8	Screw (install using item 14 on threads)	X	26
2	NAS620-8L	Washer	X	26
3	C200-1*	Retainer (Ref, no longer available)		
4	C206-1*	Retainer (Ref, no longer available)		
5	C219-2*	Spacer (Ref, no longer available)		
6	C218-2*	Shield (Ref, no longer available)		
7	C219-1*	Spacer (Ref, no longer available)		
8	C218-1*	Shield (Ref, no longer available)		
9	C205-1	Sleeve Assembly	X	1
10	C197-1	Spacer (thickness = 0.016 in.)	X	A/R
	C197-2	Spacer (thickness = 0.020 in.)	X	A/R
	C197-3	Spacer (thickness = 0.025 in.)	X	A/R
	C197-4	Spacer (thickness = 0.032 in.)	X	A/R
	C197-5	Spacer (thickness = 0.040 in.)	X	A/R
	C197-6	Spacer (thickness = 0.050 in.)	X	A/R
11	C201-1	Ball Assembly	X	1
12	C199-2	Swashplate Assembly – Upper (Ref)		
13	F198-1	Swashplate Assembly – Lower (Ref)		
14	A257-9	Anti-Seize	X	A/R
15	C647-12	Bearing Set – Swashplate (Ref; connects items 12 and 13; not shown)		
16	—	Identification Plate** (C017-6 Assembly, and C647-12 bearing set; part number, revision letter and serial number)	O	2

NOTES * To replace parts, upgrade swashplate assembly per R66 Service Bulletin SB-30.

** Refer to MM § 20-93 for replacement procedures.

Intentionally Blank

CHAPTER 71

POWERPLANT

Figure	*Title*	*Page*
71-1	Engine Installation	71.0
71-3	Engine Components – Right Side	71.2
71-5	Engine Components – Right Side	71.4
71-7	Engine Components – Left Side	71.6
71-7B	Engine Components – Left Side	71.7A
71-9	Engine Air Induction – Cage and Filter Assemblies	71.8
71-11	Engine Air Induction – Inlet Barrier Filter	71.10
71-15	Engine Air Induction – Inlet Barrier Filter (Earlier Ships)	71.14
71-17	Bellmouth Installation	71.16
71-19	Exhaust Weldment and Strut Installation	71.18
71-21	Starter-Generator Installation	71.20
71-23	Generator Control Unit Installation	71.22
71-25	Engine Monitoring Unit Installation	71.24
71-27	G090 Fuel Flow Meter Installation	71.26

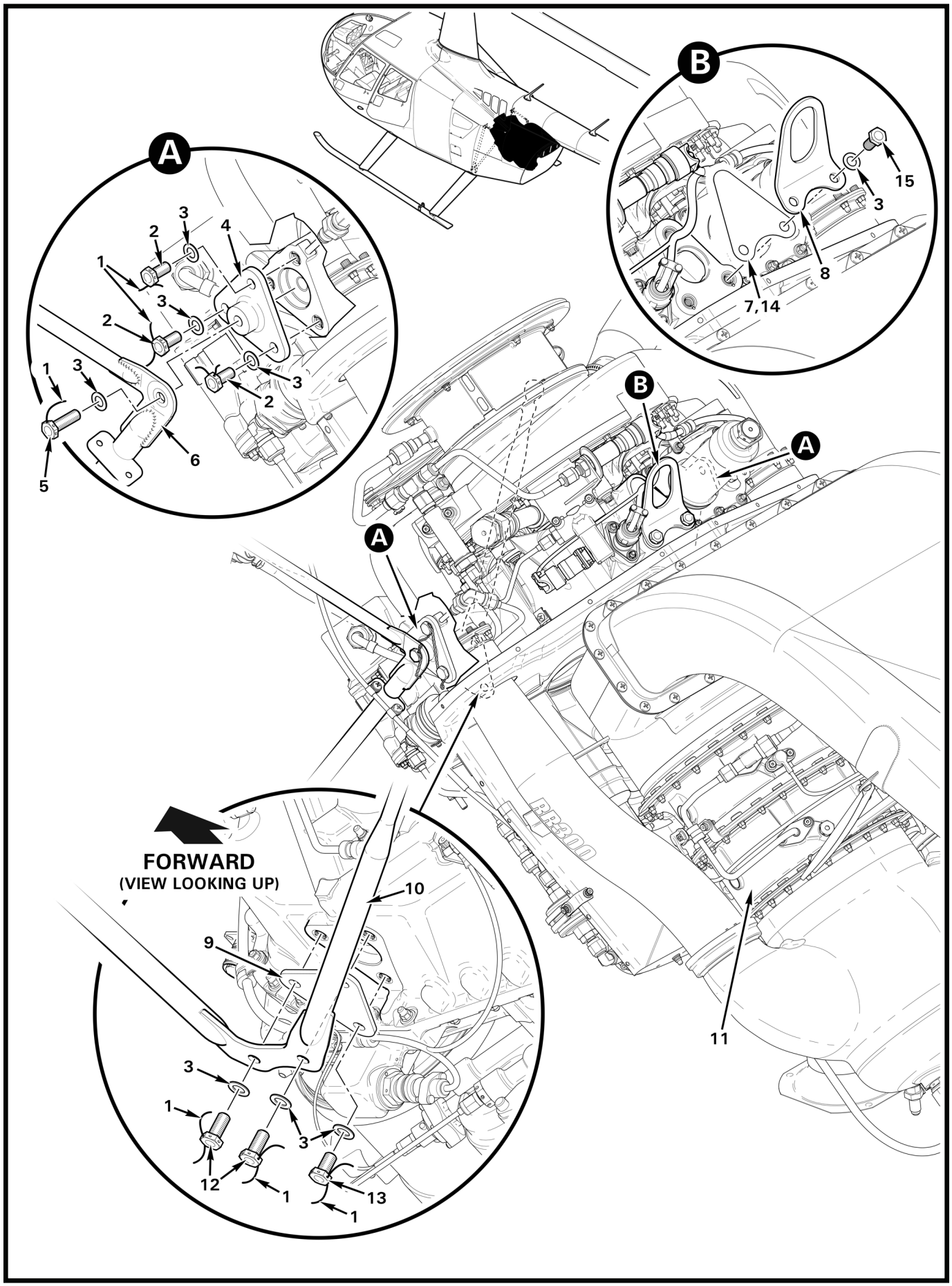
A
B
1
2
3
4
5
6
7,14
8
9
10
11
12
13
15
FORWARD
(VIEW LOOKING UP)

FIGURE AND INDEX NUMBER	PART NUMBER	DESCRIPTION	PARTS AVAIL	QTY PER ASSY
		ENGINE INSTALLATION		
71-1-1	MS20995C32	0.032 in. dia Safety Wire	X	A/R
2	NAS6605H3	Bolt	X	6
3	NAS1149F0532P	Washer	X	13
4	F593-1	Support Assembly	X	2
5	NAS6605H9	Bolt	X	2
6	F046-1	Frame Weldment (Ref, see Figure 53-7)		
7	G200-2	Cover (install using item 14; earlier aircraft)	X	1
8	G200-1	Lug (optional)	X	1
9	F593-3	Plate	X	1
10	F174-1	Support Weldment (Ref, see Figure 53-7)		
11	F145-1	Engine (Ref, Rolls-Royce Model 250-C300/A1)		
12	NAS6605H4	Bolt	X	2
13	NAS6605H2	Bolt	X	1
14	B270-1	Sealant	X	A/R
15	NAS6605-3	Bolt	X	2

NOTES

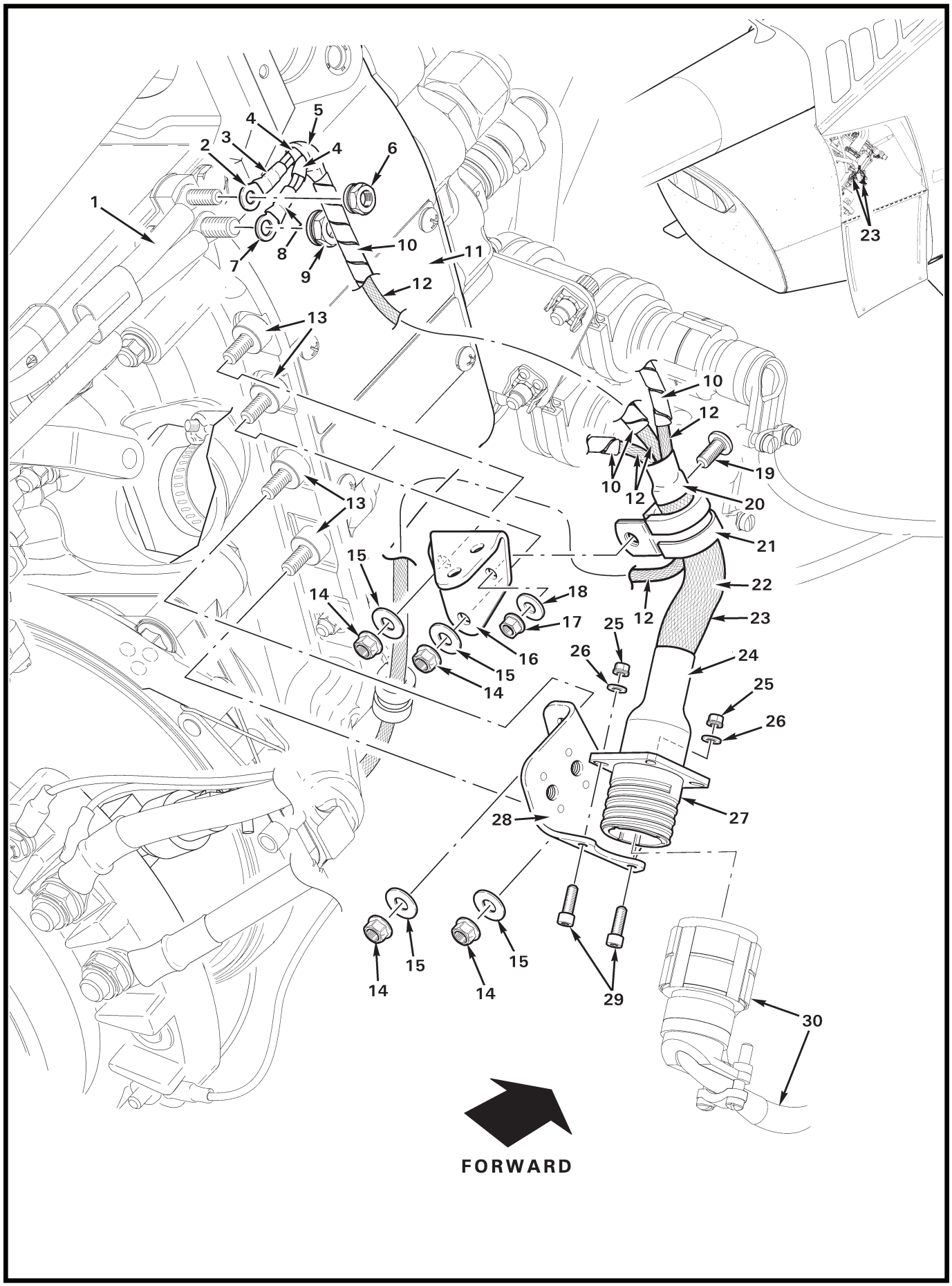
1
2
3
4
5
4
6
7
8
9
10
11
12
13
13
10
12
10
12
19
20
21
22
12
23
24
25
26
25
26
27
28
29
29
30
14
15
14
15
16
17
18
14
15
14
15
23
FORWARD

FIGURE AND INDEX NUMBER	PART NUMBER	DESCRIPTION	PARTS AVAIL	QTY PER ASSY
		ENGINE COMPONENTS – RIGHT SIDE		
71-3-1	—	Harness* – MGT (Ref)		
2	B260-33	Terminal (small)	X	1
3	B158-4	Heat Shrink (black)	X	A/R
4	B158-2	Heat Shrink (small; 2 places)	X	A/R
5	B158-6	Heat Shrink (large)	X	A/R
6	—	Nut* (small)	O	1
7	B260-34	Terminal (large)	X	1
8	B158-604	Heat Shrink (green)	X	A/R
9	—	Nut* (large)	O	1
10	B161-104	Sleeving (orange; 3 places)	X	A/R
11	—	Engine (Ref)		
12	B266-104	Sleeving	X	A/R
13	—	Spacer*	O	4
14	—	Nut* (Ref)		
15	NAS1149F0332P	Washer	X	4
16	F577-3	Bracket	X	1
17	MS21042L08	Nut	X	1
18	NAS1149FN832P	Washer	X	1
19	MS27039C0806	Screw	X	1
20	B158-812	Heat Shrink (adhesive-lined)	X	A/R
21	MS21919WCH8	Clamp	X	1
22	B266-108	Sleeving	X	A/R
23	F049-012	Harness Assembly – Engine (Incl items 2 thru 5, 7, 8, 10, 12, 20, 22, 24, and 27)	X	1
	F049-09**	Harness Assembly – Engine (Ref, earlier aircraft; no longer available.)		
24	H129-4-J-WM250	Shrink Boot	X	1
25	MS21042L04	Nut	X	2
26	NAS620-4	Washer	X	2
27	D38999/20FC35PN	Receptacle (Ref)		
28	F577-1	Bracket Assembly	X	1
29	NAS1352-04-6P	Screw	X	2
30	F859	Harness Assembly – Electrical (Ref; cabin)		

NOTES * Supplied with engine.

** To replace, order KI-223 Engine Electrical Harness Upgrade Kit Instructions revision C and subsequent, for helicopter S/Ns 0003 thru 0274. Order KI-223-2 for helicopter S/Ns 0275 thru 1021.

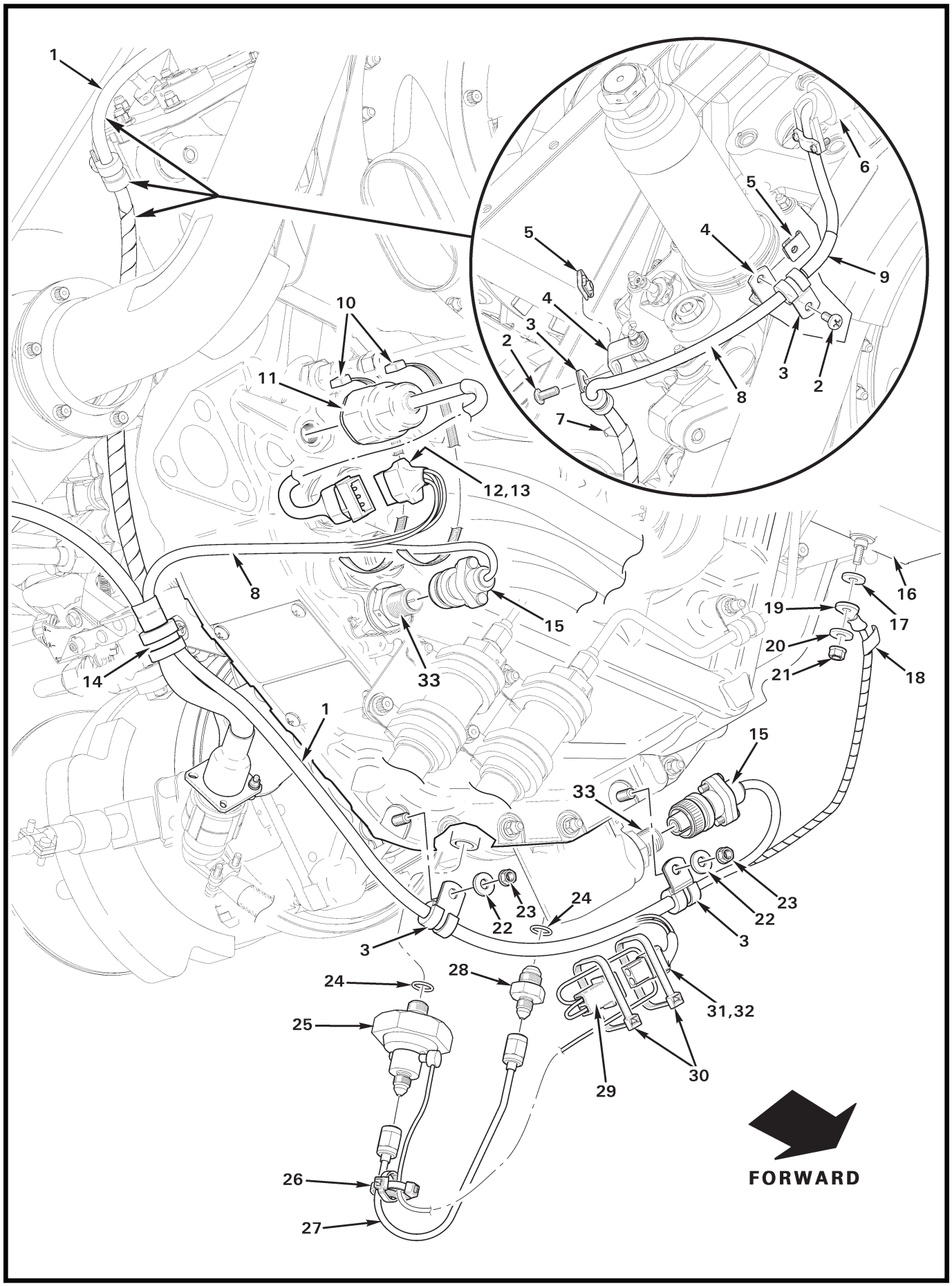
1
6
5
5
4
9
4
10
3
2
3
2
11
8
7
12,13
8
16
15
19
17
20
14
33
21
18
1
15
33
23
24
22
23
22
3
3
28
24
31,32
25
30
29
26
27
FORWARD

FIGURE AND INDEX NUMBER	PART NUMBER	DESCRIPTION	PARTS AVAIL	QTY PER ASSY
		ENGINE COMPONENTS – RIGHT SIDE		
71-5-1	F049-012*	Wire Harness Assembly – Engine (Incl items 6 thru 9, 12, 13, 15, 30, and 31)	X	1
	F049-09*	Wire Harness Assembly – Engine (Ref; earlier ships)		
2	MS27039C0806	Screw	X	2
3	MS21919WCH4	Clamp	X	4
4	MS9592-050*	Bracket	O	2
5	B162-2	Clipnut	X	2
6	MS3456W10SL-3S	Plug (Ref)		
7	B161-104	Spirap	X	A/R
8	B266-104	Sleeving	X	A/R
9	7861K46	Heat Shrink	X	A/R
10	MS3367-7-9	Ty-Rap	X	2
11	D745-3**	Switch Assembly (oil pressure; includes [1] NAS617-3 packing)	X	1
12	B263-15	Housing	X	1
	B263-2	Socket	X	3
13	B158-8	Heat Shrink	X	A/R
14	MS21919WCH8	Clamp (Ref, see Figure 71-3)		
15	MS3106R8S-1S	Plug	X	2
16	—	Ignition Exciter Box (Ref)		
17	NAS1149E0363R	Washer	X	1
18	B161-102	Spirap	X	A/R
19	B260-4	Terminal	X	1
20	—	Washer*	O	1
21	—	Nut*	O	1
22	NAS1149CO363R*	Washer	O	2
23	—	Nut*	O	2
24	MS29512-03	Packing (o-ring)	X	2
25	G426-1	Switch Assembly (differential pressure; includes items 24 & 29)	X	1
26	MS3367-4-9	Ty-Rap	X	2
27	F741-1	Line Assembly	X	1
28	AN919-0D	Reducer	X	1
29	B263-12	Housing	X	1
	B263-1	Pin	X	1
	B263-3	Pin	X	1
30	MS3367-5-9	Ty-Rap	X	2

NOTES * See also Figure 71-7.

** Rolls-Royce part number. See Rolls Royce RR300 Line Illustrated Parts Catalog.

Continues

FIGURE AND INDEX NUMBER	PART NUMBER	DESCRIPTION	PARTS AVAIL	QTY PER ASSY
		ENGINE COMPONENTS – RIGHT SIDE (Cont'd)		
71-5-31	B263-13	Housing	X	1
	B263-2	Socket	X	2
32	B158-6	Heat Shrink	X	A/R
33	6871534*	Oil Plug/Chip Detector	X	2

NOTES * Rolls-Royce part number. See Rolls Royce RR300 Line Illustrated Parts Catalog.

Intentionally Blank

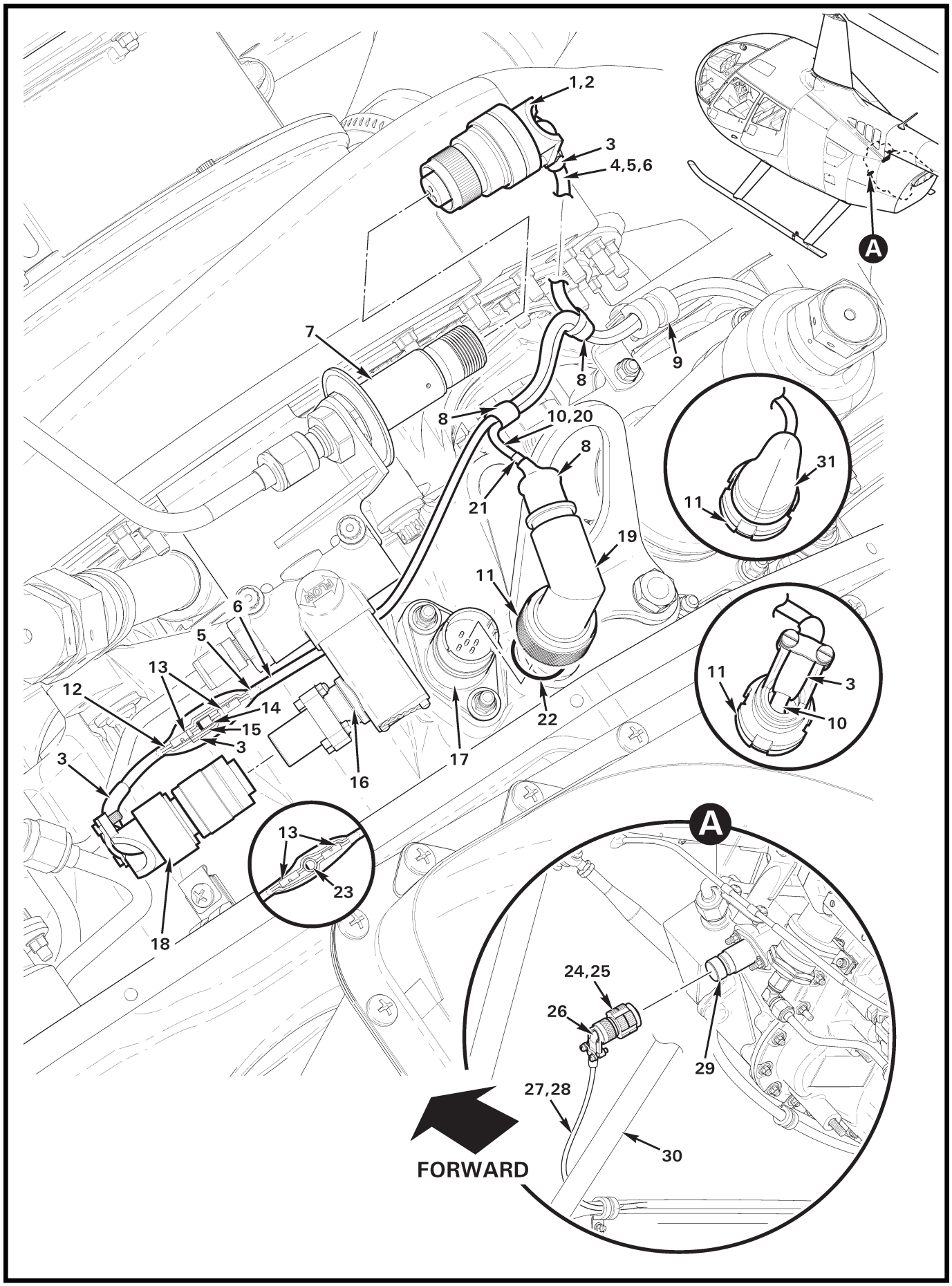
1,2
3
4,5,6
A
7
8
9
8
10,20
8
21
31
11
19
11
6
5
13
12
14
15
3
3
16
17
22
11
3
10
13
23
18
A
24,25
26
29
27,28
30
FORWARD

FIGURE AND INDEX NUMBER	PART NUMBER	DESCRIPTION	PARTS AVAIL	QTY PER ASSY
		ENGINE COMPONENTS – LEFT SIDE		
71-7-1	F049-012*	Harness Assembly (Incl items 2 thru 6, 8, 10 thru 15, and 18 thru 22)	X	1
	F049-09*	Harness Assembly (Ref; earlier ships)		
	F049-02*	Harness Assembly (Ref; earlier ships)		
2	MS3456W10SL-3S	Plug	X	1
3	B158-6	Heat Shrink	X	A/R
4	-1944,-1945	Wires (Ref)		
5	B158-2	Heat Shrink	X	A/R
6	B266-104	Sleeving	X	A/R
7	RR30000270**	Anti-Ice Pressure Switch (Ref)		
8	202D121-25/225	Boot	X	A/R
	7861K46	Heat Shrink (earlier ships)	O	A/R
9	MS21919WCH4	Clamp (Ref, see Figure 71-5)		
10	-1938,-1939,-1940, -1941	Wires (Ref)		
11	D38999 / 26FB98SA	Plug	X	1
	MS27488-20-2	Sealing Plug (pin E and F)	X	2
	B158-2	Heat Shrink	X	A/R
12	-2037	Wire	X	1
13	B261-2	Splice	X	2
14	D275-102	Diode (3 amp)	X	1
15	-2054	Wire (Ref)		
16	23007827**	Anti-Ice Valve (Ref)		
17	RR30000206**	N1 Speed Sensor (Ref)		
18	M83723 / 75R08036	Plug	X	1
19	M85049/90-11Z03	Backshell	X	1
20	B158-704	Heat Shrink (black)	X	A/R
21	B158-806	Heat Shrink (black, adhesive)	X	A/R
22	1182N111	O-ring	X	1
23	A15A	Diode (15 amp; earlier ships)	X	1
24	F859-03	Harness Assembly (Incl items 23, and 25 thru 28)	X	1
25	D38999 / 26FB98SN	Plug	X	1
26	608036-1	Tape	X	A/R
27	B266-104	Sleeving	X	A/R
28	-1934 thru 1937	Wires (Ref)		

NOTES * KI-223 Engine Electrical Harness Kit to replace -02, and -09, with -012 for helicopter S/Ns 0003 thru 0274. KI-223-2 to replace -09 with -012 for helicopter S/Ns 0275 thru 1021.

** Rolls-Royce part number. See Rolls Royce RR300 Line Illustrated Parts Catalog.

Continues

FIGURE AND INDEX NUMBER	PART NUMBER	DESCRIPTION	PARTS AVAIL	QTY PER ASSY
		ENGINE COMPONENTS – LEFT SIDE (Cont'd)		
71-7-29	23054163*	N2 Sensor (Ref)		
30	F046-1	Frame Weldment (Ref)		
31	222A121-25/225	Boot (earlier ships).	X	1

NOTES * Rolls-Royce part number. See Rolls Royce RR300 Line Illustrated Parts Catalog.

\

Intentionally Blank

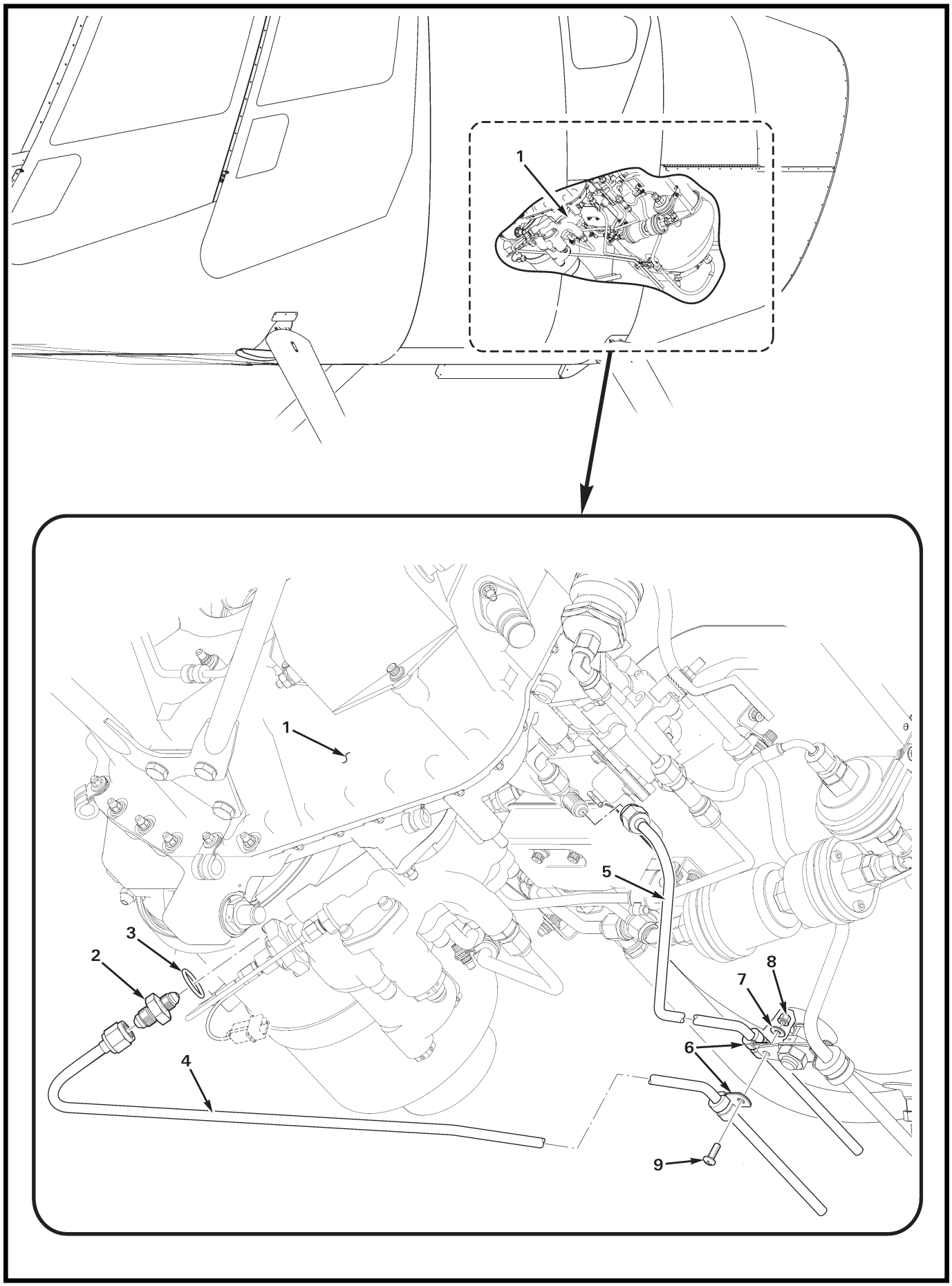
1
1
2
3
4
5
6
7
8
9

FIGURE AND INDEX NUMBER	PART NUMBER	DESCRIPTION	PARTS AVAIL	QTY PER ASSY
		ENGINE COMPONENTS – LEFT SIDE		
71-7D-1	F145-1	Engine (Ref)		
2	AN919-2D	Reducer	X	1
3	MS29512-3	Packing	X	1
4	F727-1	Line Assembly	X	1
5	F727-2	Line Assembly	X	1
6	MS21919WCH4	Clamp	X	2
7	NAS1149FN832P	Washer	X	1
8	MS21042L08	Nut	X	1
9	MS27039C0808	Screw	X	1

NOTES

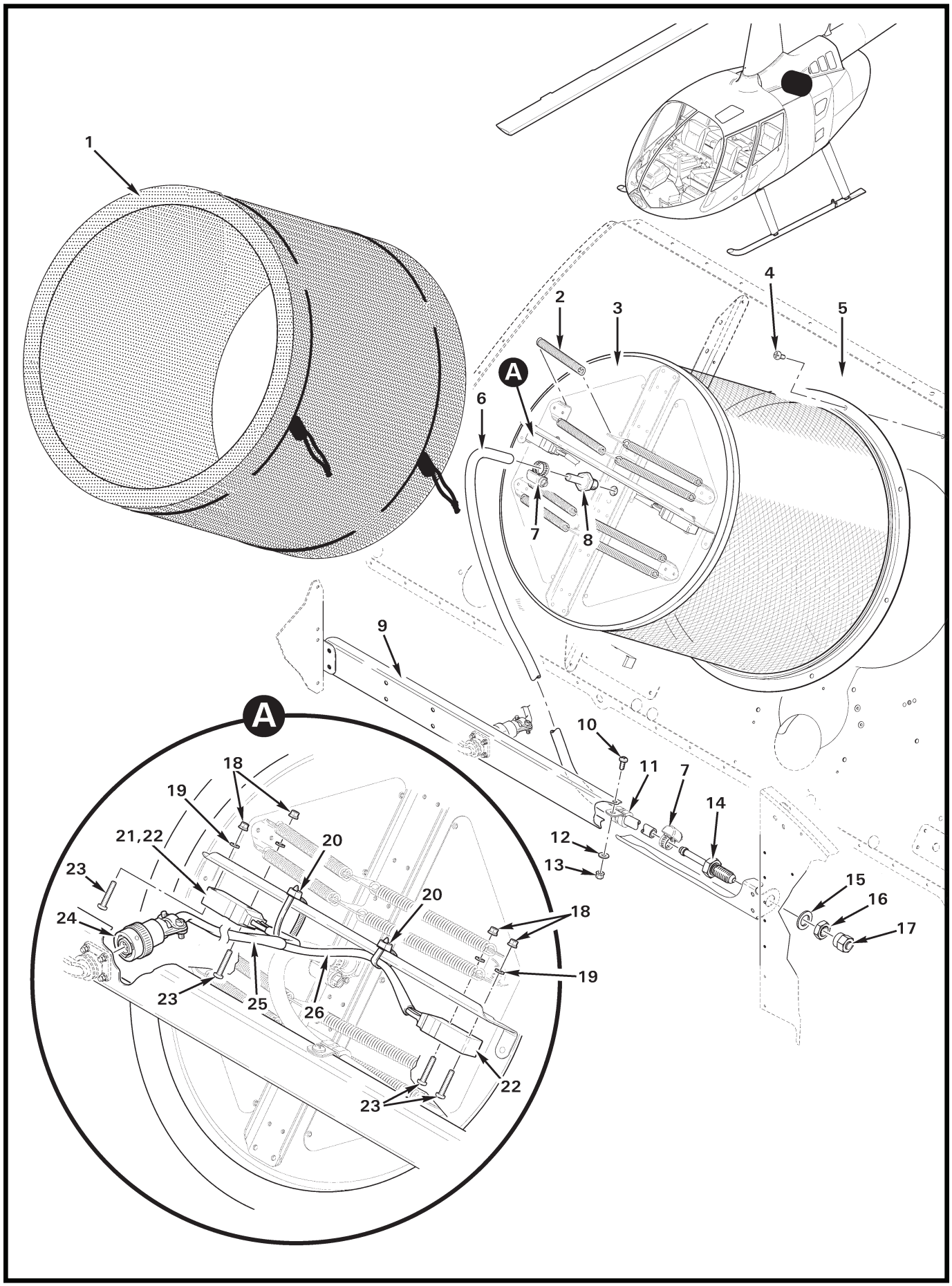
1
2
3
4
5
6
7
8
9
10
11
7
14
12
13
15
16
17
A
A
18
19
21,22
20
23
24
20
18
19
23
25
26
22
23

FIGURE AND INDEX NUMBER	PART NUMBER	DESCRIPTION	PARTS AVAIL	QTY PER ASSY
		ENGINE AIR INDUCTION – CAGE AND FILTER ASSEMBLIES		
71-9-1	F771-1	Air Filter Assembly	X	1
2	B774-8	Spring	X	8
3	G057-1	Cage Assembly (Incl items 2, 18 thru 21, and 23)	X	1
4	MS27039C0806	Screw	X	7
5	F234-1	Firewall (Ref)		
6	A729-42	Tube	X	1
7	B277-4	Clamp	X	2
8	G738-1	Nozzle	X	1
9	G258-4	Strap (Ref)		
10	MS27039C0807	Screw	X	1
11	MS21919WDG6	Clamp	X	1
12	NAS1149FN816P	Washer	X	1
13	MS21042L08	Nut	X	1
14	AS5180D04	Fitting	X	1
15	NAS1149F0763P	Washer	X	1
16	AN316-7R	Nut	X	1
17	AN929-4	Cap	X	1
18	MS21042L04	Nut	X	4
19	NAS620-4	Washer	X	4
20	MS3367-4-9	Ty-Rap	X	2
21	F049-08	Harness Assembly – Air Filter Switch (Incl items 22, and 24 thru 26)	X	1
22	D2VW-5-1MS	Switch	X	2
23	MS35206-219	Screw	X	4
24	MS3116E8-4P	Plug	X	1
	B158-2	Heat Shrink (around wires; not shown)	X	A/R
25	B158-4	Heat Shrink	X	A/R
26	B158-3	Heat Shrink	X	A/R

NOTES

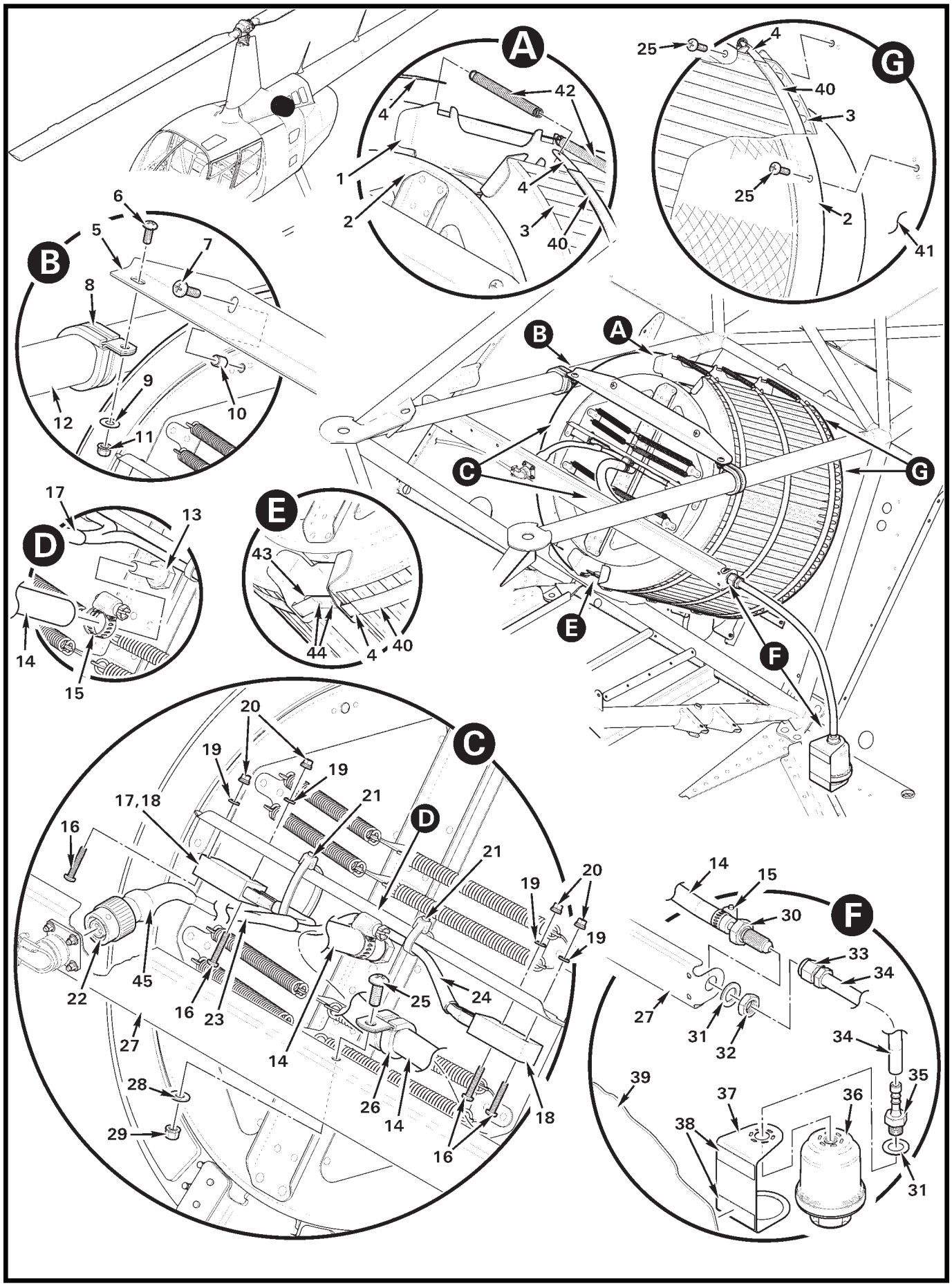
A
42
4
1
2
4
3
40
G
25
4
40
3
25
2
41
B
6
5
7
8
9
12
10
11
B
A
C
G
E
E
F
D
17
13
14
15
E
43
44
4
40
C
20
19
19
17,18
21
16
D
21
19
20
19
22
45
16
23
25
24
27
14
28
26
14
18
29
16
F
14
15
30
33
34
27
31
32
34
35
39
37
36
38
31

FIGURE AND INDEX NUMBER	PART NUMBER	DESCRIPTION	PARTS AVAIL	QTY PER ASSY
		ENGINE AIR INDUCTION – INLET BARRIER FILTER		
71-11-1	G058-2	Cage Assembly (Incl items 2 thru 9, and 10 [2])	X	1
2	G057-1	Cage Assembly (includes items 17, 19 thru 21, 40, 43, and 44; see also Figure 71-9)	X	1
3	146150-101	Filter Assembly	X	2
4	146160-101	Strap Assembly	X	2
5	G735-7	Angle	X	1
6	MS27039C1-07	Screw	X	2
7	MS27039C1-10	Screw	X	2
8	MS21919WDG18	Clamp	X	2
9	NAS1149F0316P	Washer	X	4
10	C130-26	Spacer	X	8
11	D210-3	Nut	X	2
12	F020-1	Upper Frame Assembly (Ref)		
13	G738-1	Nozzle	X	1
14	A729-42	Tube	X	1
15	B277-4	Clamp	X	2
16	MS35206-219	Screw	X	4
17	F049-08	Harness Assembly – Air Filter Switch (Incl items 18, 22 thru 25, and 45)	X	1
18	D2VW-5-1MS	Switch	X	2
19	NAS620-4	Washer	X	4
20	MS21042L04	Nut	X	4
21	MS3367-4-9	Ty-Rap	X	2
22	MS3116E8-4P	Plug	X	1
23	B158-4	Heat Shrink	X	A/R
24	B158-3	Heat Shrink	X	A/R
25	MS27039C0806	Screw	X	2
26	MS21919WDG8	Clamp	X	1
27	G258-4	Strap (Ref)		
28	NAS1149FN816P	Washer	X	1
29	MS21042L08	Nut	X	1
30	AS5180D04	Fitting	X	1
31	NAS1149F0763P	Washer	X	2
32	AN316-7R	Nut	X	1
33	A457-17	Fitting	X	1

NOTES

Continues

FIGURE AND INDEX NUMBER	PART NUMBER	DESCRIPTION	PARTS AVAIL	QTY PER ASSY
		ENGINE AIR INDUCTION – INLET BARRIER FILTER (Cont'd)		
71-11-34	A729-78	Tube	X	1
35	A457-16	Fitting	X	1
36	100460-201	Gage	X	1
37	G735-1	Bracket Assembly (Incl Item 38)	X	1
38	A701-7	Tape	X	2
39	G235-1	Bulkhead (Ref)		
40	B158-6	Heat Shrink	X	6
41	F234-1	Firewall (Ref)		
42	B774-10	Spring	X	3
43	G735-9	Stop	X	3
44	MS20470AD3	Rivet (3 locations)	X	6
45	B158-2	Heat Shrink	X	A/R

NOTES

Intentionally Blank

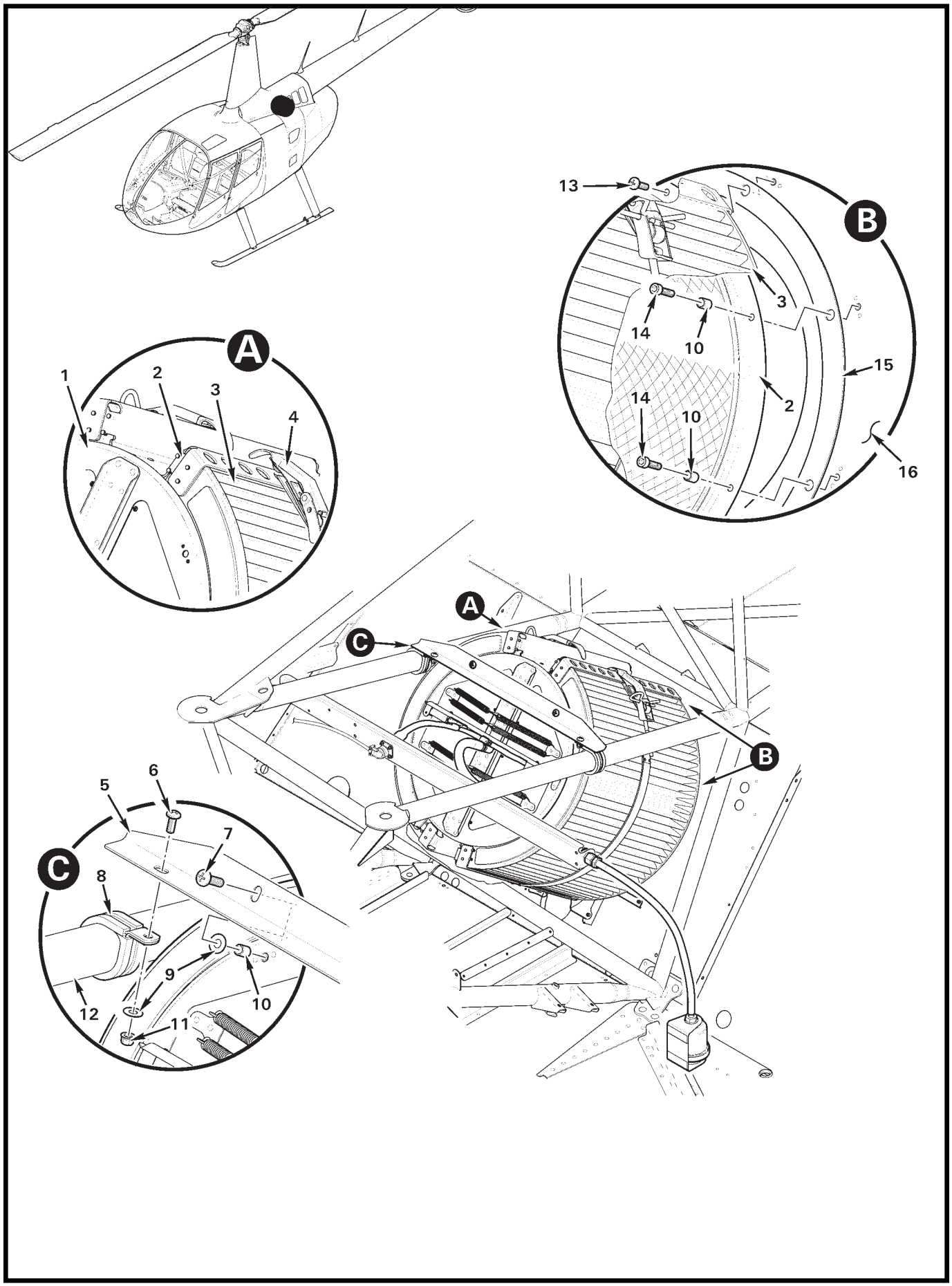
A
1
2
3
4
B
13
3
14
10
15
2
14
10
16
A
C
B
C
5
6
7
8
9
10
12
11

FIGURE AND INDEX NUMBER	PART NUMBER	DESCRIPTION	PARTS AVAIL	QTY PER ASSY
		ENGINE AIR INDUCTION – INLET BARRIER FILTER (EARLIER SHIPS)		
71-15-1	G058-1	Cage Assembly (Incl items 2 thru 9, and 10 [2])	X	1
2	G057-1	Cage Assembly (includes items 17, and 19 thru 21; see also Figures 71-9, and 71-11)	X	1
3	146150-101	Filter Assembly	X	2
4	146160-101	Strap Assembly	X	2
5	146171-201	Stiffener	X	1
6	MS27039C1-07	Screw	X	2
7	MS27039C1-10	Screw	X	2
8	MS21919WDG18	Clamp	X	2
9	NAS1149F0316P	Washer	X	4
10	146121-201	Spacer	X	8
11	D210-3	Nut	X	2
12	F020-1	Upper Frame Assembly (Ref)		
13	MS27039C0806	Screw	X	1
14	NAS1352-08-12P	Screw	X	6
15	165201-201	Seal	X	1
16	F234-1	Firewall (Ref)		

NOTES

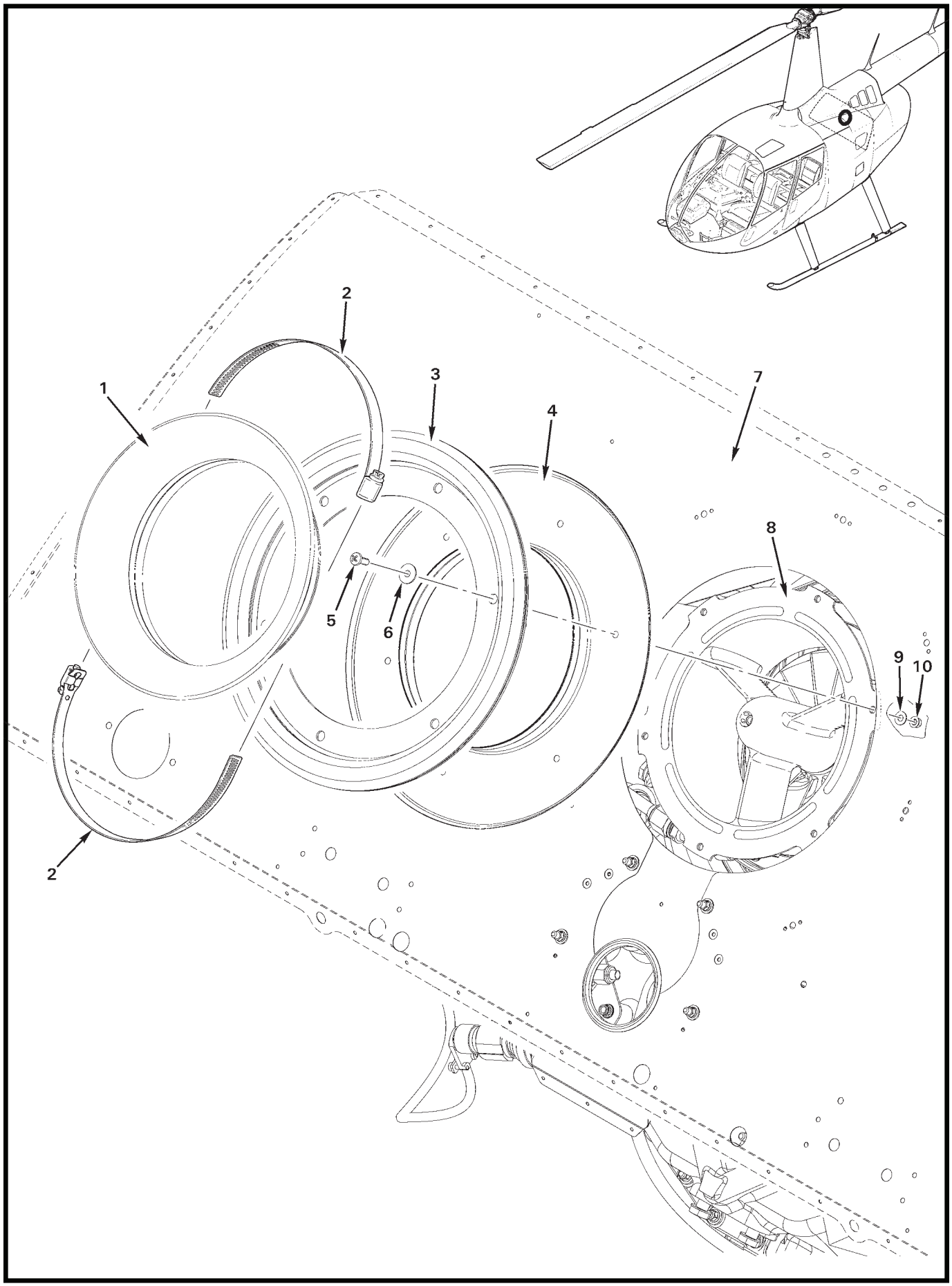

FIGURE 71-17 BELLMOUTH INSTALLATION

FIGURE AND INDEX NUMBER	PART NUMBER	DESCRIPTION	PARTS AVAIL	QTY PER ASSY
		BELLMOUTH INSTALLATION		
71-17-1	F579-1	Bellmouth	X	1
2	B277-36	Clamp	X	2
3	F597-1	Seal	X	1
4	F580-1	Inlet	X	1
5	MS27039C0807	Screw	X	6
6	F453-5	Retainer	X	6
7	F234-1	Firewall (Ref)		
8	—	Engine Front Support (Ref)		
9	NAS1149FN832P	Washer	X	6
10	MS21042L08	Nut	X	6

NOTES

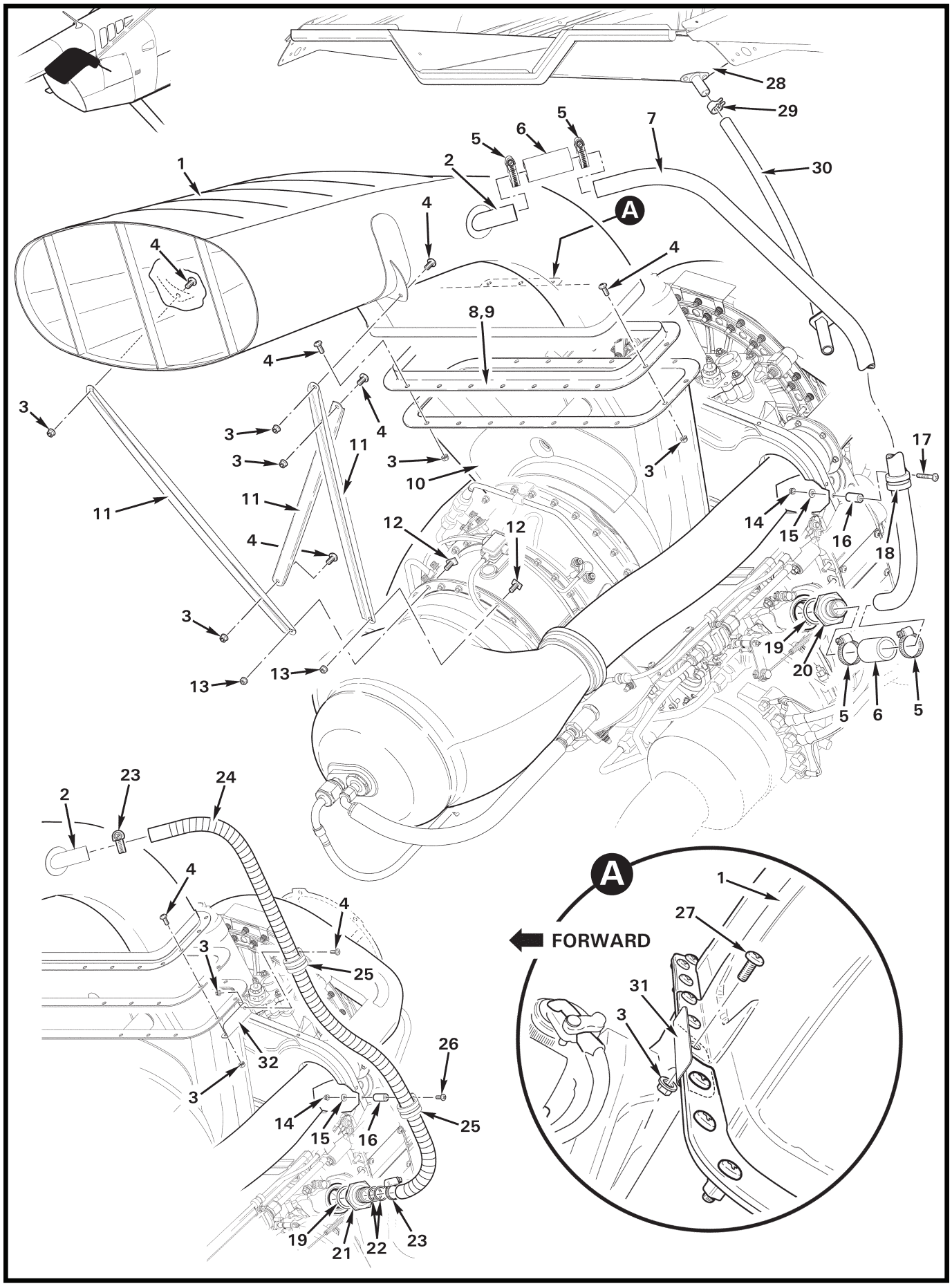
28
29
30
1
2
5
6
7
4
A
8,9
3
11
10
12
13
14
15
16
17
18
19
20
21
22
23
24
25
26
27
31
32
FORWARD

FIGURE AND INDEX NUMBER	PART NUMBER	DESCRIPTION	PARTS AVAIL	QTY PER ASSY
		EXHAUST WELDMENT AND STRUT INSTALLATION		
71-19-1	F169-1	Exhaust Weldment (includes item 2)	X	1
2	F169-9	Vent (Ref)		
3	D210-3	Nut	X	24
4	MS27039C1-06	Screw	X	24
5	B277-12	Clamp (install with screw on top within 30 degrees)	X	4
6	A729-68	Tube	X	2
7	G727-3	Tube (required if item 30 is installed; refer to KI-258)	X	1
	G727-1*	Tube (no provision for firewall drain tube)	X	1
8	F169-2	Base (install using item 9)	X	1
9	7020-3	Putty	X	A/R
10	—	Engine Exhaust Collector (Ref)		
11	F173-1	Strut	X	3
12	—	Tee Bolt (Ref, supplied with engine)		
13	—	Nut (Ref, supplied with engine)		
14	MS21042L08	Nut	X	1
15	NAS1149FN832P	Washer	X	1
16	C130-51	Spacer	X	1
17	MS27039C0816	Screw	X	1
18	MS21919WCH12	Clamp	X	2
19	NAS617-12	Packing (o-ring)	X	1
20	F170-2	Fitting	X	1
21	F170-1	Fitting (Ref, superseded by item 20)	O	1
22	A215-016	O-Ring	X	2
23	B277-8*	Clamp (install with screw on top within 30 degrees)	X	2
24	A785-36*	Hose (superseded by item 7)	O	1
25	MS21919WCH14*	Clamp	X	2
26	MS27039C0816*	Screw (alternate part no. AN525-10R16)	X	1
27	MS27039C1-07	Screw	X	3
28	G929-1	Cover (Ref)		
29	D277-8	Clamp	X	1
30	A729-80	Tube	X	1
31	F173-2	Shield	X	1
32	F577-5*	Bracket	X	1
		* * *		
33	KI-258	R66-series Firewall Drain Installation Kit (Incl items 29 and 30)	X	A/R

NOTES * Earlier R66s.

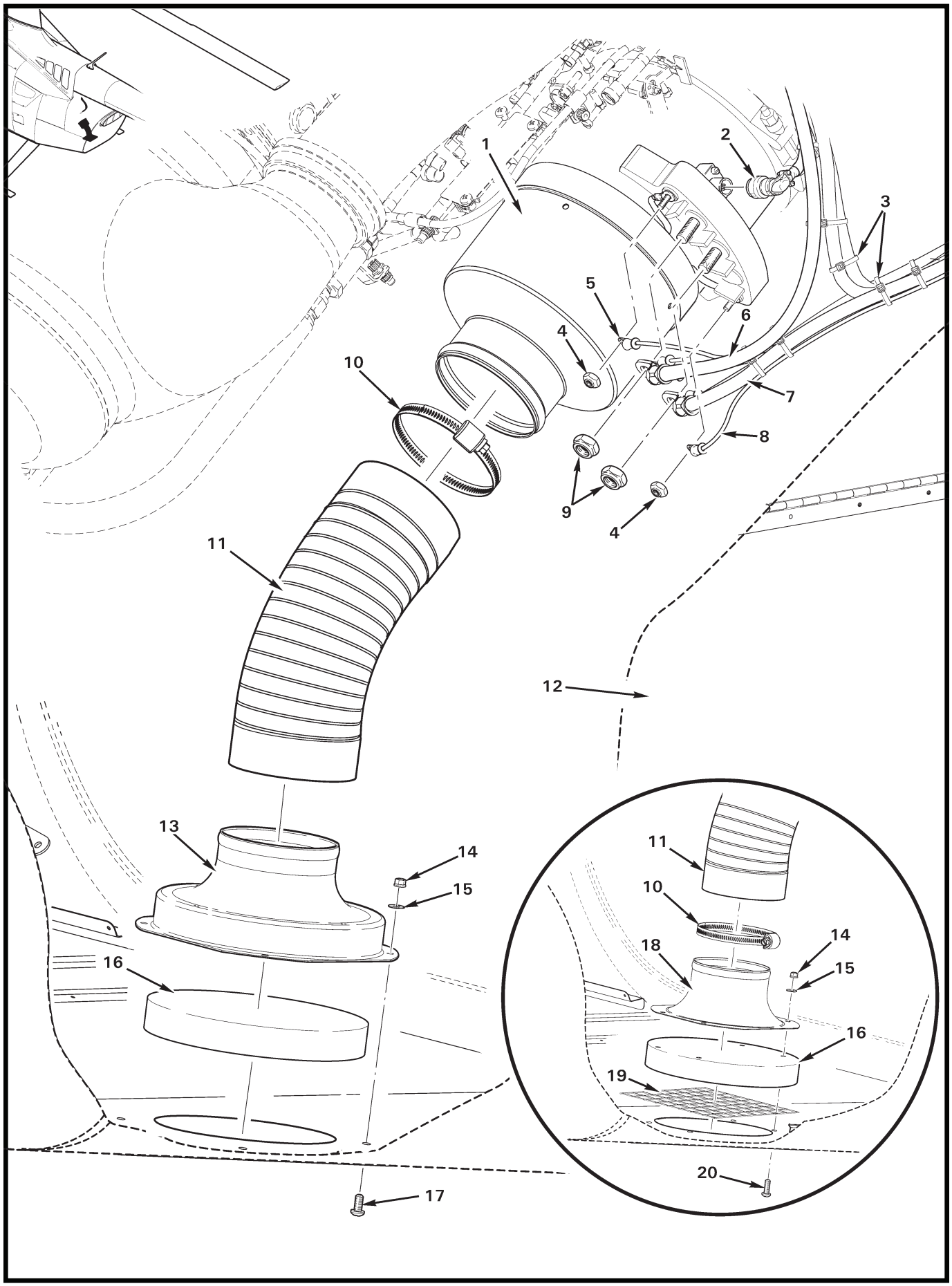

FIGURE 71-21 STARTER-GENERATOR INSTALLATION

FIGURE AND INDEX NUMBER	PART NUMBER	DESCRIPTION	PARTS AVAIL	QTY PER ASSY
		STARTER-GENERATOR INSTALLATION		
71-21-1	—	Starter-Generator (Ref; supplied with engine)		
2	MS3116J8-3S*	Plug (wire no. F049-1989 and -1990)	X	1
3	MS3367-5-9	Ty-Rap	X	A/R
4	—	Nut (small, supplied with item 1)	O	2
5	F049-1985	Wire (Ref)		
6	A780-51	Cable Assembly (wire no. 1969)	X	1
7	A780-50	Cable Assembly (wire no. 1982)	X	1
8	F049-1988	Wire (Ref)		
9	—	Nut (large, supplied with item 1)	O	2
10	B277-48	Clamp	X	1
11	A785-38	Hose	X	1
12	G040-1	Cowling Assembly (Ref; aft)		
13	C579-4	Inlet (2.5 in. tall)	X	1
14	MS21042L08	Nut	X	4
15	NAS1149FN816P	Washer	X	4
16	F771-4	Foam	X	1
17	MS27039C0806	Screw	X	4
18	C579-2**	Inlet (2 in. tall, installed using item 10)	X	1
19	A640-2**	Screen	X	1
20	MS27039C0808**	Screw	X	4

NOTES * Included with F049-013 harness assembly.
** Earlier R66s.

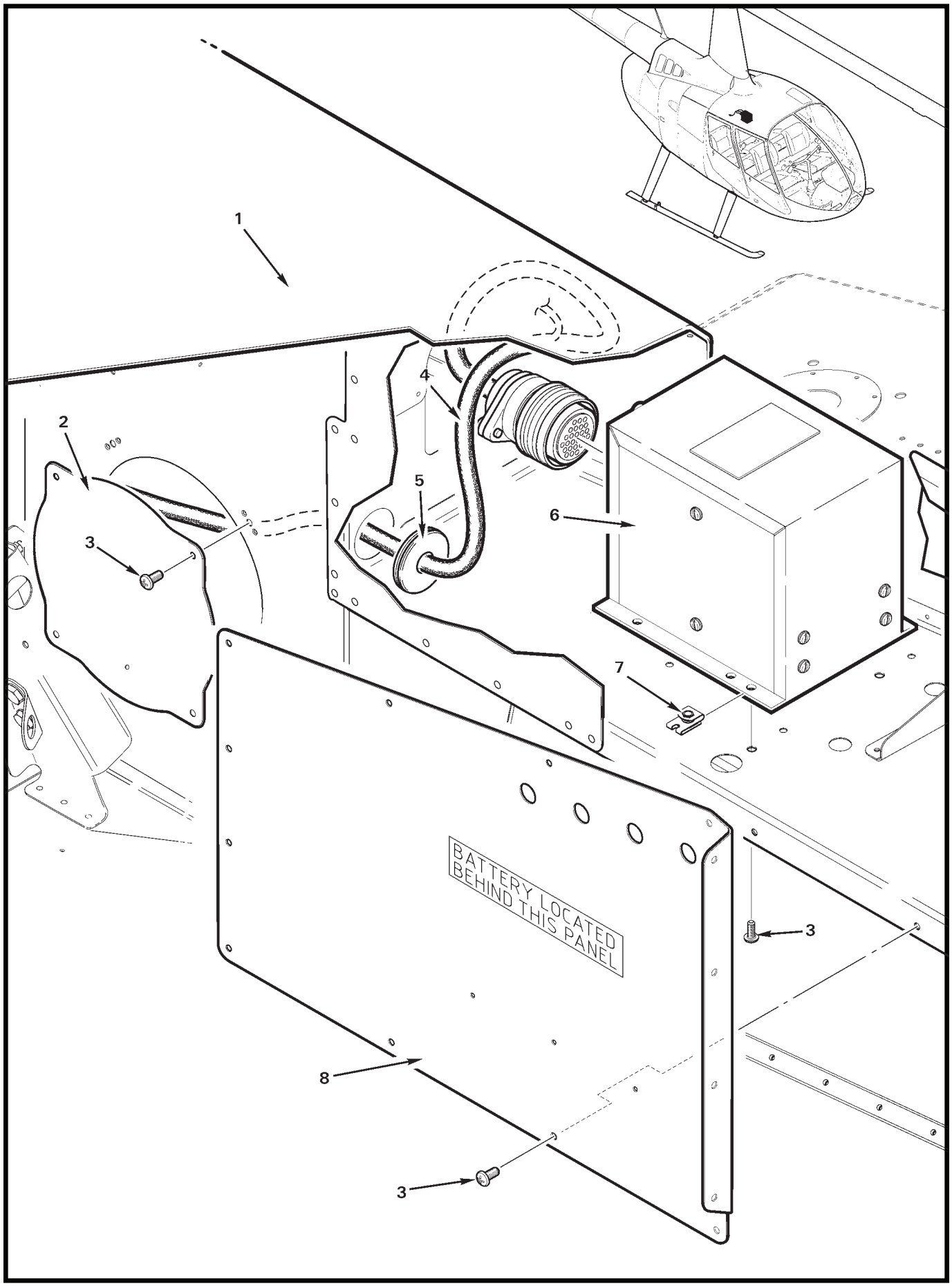
1
2
3
4
5
6
7
8
3
3
BATTERY LOCATED
BEHIND THIS PANEL

FIGURE AND INDEX NUMBER	PART NUMBER	DESCRIPTION	PARTS AVAIL	QTY PER ASSY
		GENERATOR CONTROL UNIT INSTALLATION		
71-23-1	G252-1	Panel (Ref; baggage compartment)		
2	G248-2	Cover (access)	X	1
3	MS27039C0806	Screw	X	22
4	F049-013	Wire Harness Assembly (Incl item 5)	X	1
	F049-010	Wire Harness Assembly (Incl item 5; earlier aircraft)	O	1
	F049-03	Wire Harness Assembly (Incl item 5; earlier aircraft)	O	1
5	MS35489-15	Grommet	X	1
6	RR30000466	Generator Control Unit (supplied with engine)	O	1
7	B162-3	Clipnut	X	4
8	G248-1	Cover Assembly (access)	X	1

NOTES

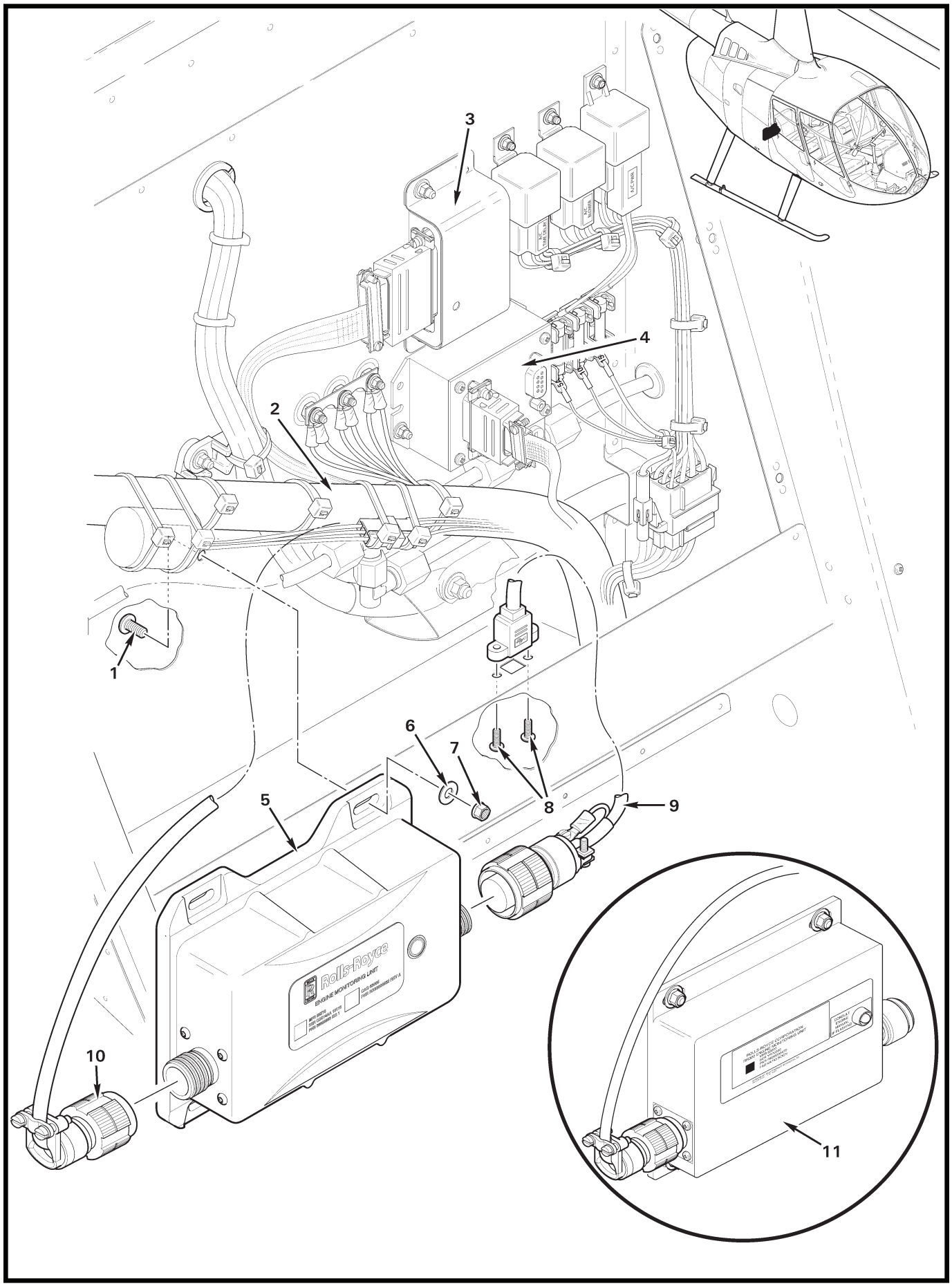
3
4
2
1
6
7
8
9
5
10
11
Rolls-Royce
ENGINE MONITORING UNIT

FIGURE AND INDEX NUMBER	PART NUMBER	DESCRIPTION	PARTS AVAIL	QTY PER ASSY
		ENGINE MONITORING UNIT INSTALLATION		
71-25-1	MS27039C1-07	Screw	X	4
2	F859-01	Wire Harness Assembly (Ref; cabin)		
3	F695-4	Tester Assembly (Ref)		
4	B240-3	Blind Encoder (Ref)		
5	RR30000470*	Engine Monitoring Unit (supplied with engine)	O	1
6	NAS1149F0332P	Washer	X	4
7	MS21042L3	Nut	X	4
8	—	Screw	O	2
9	F049-07**	Harness Assembly (USB B-female; includes item 8)	X	1
10	—	Connector (Ref; “EMU” plug)		
11	EX183707*	Engine Monitoring Unit (supplied with engine; earlier ships)	O	1

NOTES * Rolls-Royce part number. See RR300 Line Illustrated Parts Catalog for latest EMU information.

** USB 2.0 cable, A-male to B-male, required to access EMU.

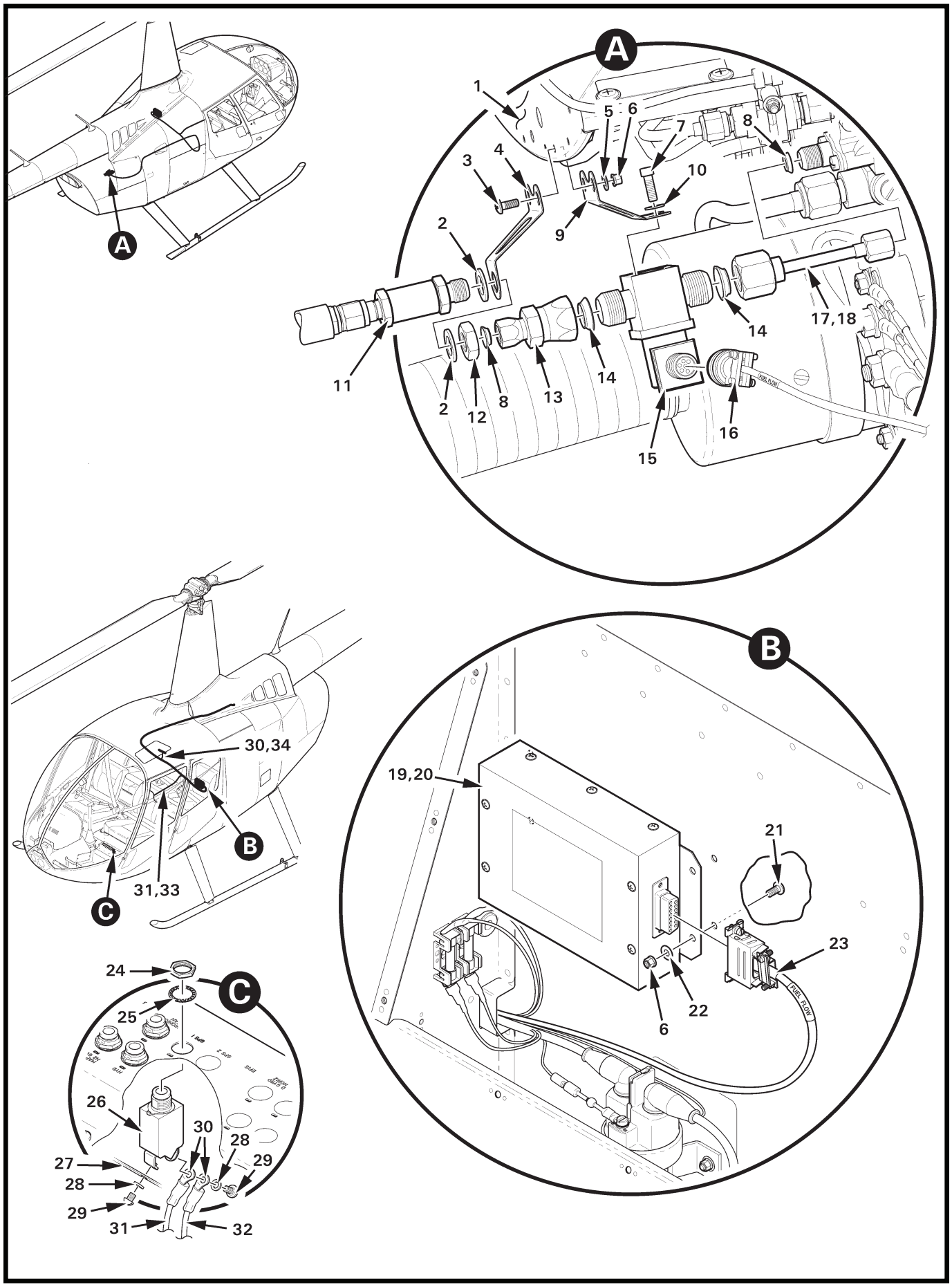

FIGURE 71-27 G090 FUEL FLOW METER INSTALLATION

FIGURE AND INDEX NUMBER	PART NUMBER	DESCRIPTION	PARTS AVAIL	QTY PER ASSY
		G090 FUEL FLOW METER INSTALLATION*		
71-27-1	F145-1	Engine (Ref, Rolls Royce Model 250-C300/A1)		
2	—	Washer – Existing (locate as required for best fit)	O	2
3	MS27039C0806	Screw	X	2
4	G155-1	Bracket (aft)	X	1
5	NAS1149FN832P	Washer	X	2
6	MS21042L08	Nut	X	6
7	NAS1351-3LE6P	Screw	X	2
8	AS4824N04	Seal (one time use, discard previous)	O	2
9	G155-2	Bracket (forward)	X	1
10	NAS1149F0332P	Washer	X	2
11	—	Fuel Check Valve (Ref)		
12	—	Nut – Existing	O	1
13	SS6565-8-4	Reducer Fitting	X	1
14	AS4824N08	Seal	X	2
15	660534HR-01	Transducer Assembly	X	1
16	MS27467T9B35S	Plug	X	1
	M85049/49-2S8W	Backshell	X	1
	-3046	Wire (Ref)		
	B158-704	Heat Shrink	X	A/R
17	564601	Tube Assembly	X	1
18	—	Tube Assembly – Original Equipment (see RR300 LIPC; see R66 MM for installation.)	O	1
19	833811-01**	AIS-380 Adapter (Incl item 20)	X	1
20	CK833811-01	Configuration Kit (Ref, supplied with helicopter. Includes software and cable.)	O	1
21	MS27039C0805	Screw	X	4
22	NAS1149FN816P	Washer	X	4
23	B269-82	Receptacle	X	1
	B269-23	Backshell	X	1
	B269-31	Screw – Locking	X	2
	B158-4	Heat Shrink	X	A/R
	B267-5	Splice	X	1
	B267-2	Terminator	X	1
	B267-3	Terminator	X	1
	—	Wires (Ref; -3043, -3044, -3045, -3046, & -3047)		

NOTES * Fuel flow meter installation requires a compatible GPS device with display; verify GPS compatibility during maintenance.

** Configure fuel flow adapter per R66 MM Chapter 28.

Continues

FIGURE AND INDEX NUMBER	PART NUMBER	DESCRIPTION	PARTS AVAIL	QTY PER ASSY
		G090 FUEL FLOW METER INSTALLATION (Cont'd)		
71-27-24	—	Nut	O	1
25	—	Washer	O	1
26	B297-5	Circuit Breaker (5 amp; includes items 24, 25, 28, and 29)	O	1
27	A448	Bus Bar (Ref)		
28	—	Washer	O	2
29	—	Screw	O	2
30	B260-2	Terminal	X	1
31	-3043	Wire (Ref; power)		
32	-466	Wire (Ref, GPS)		
33	-3045	Wire (Ref; to GTN or IFD)		
34	-3044	Wire (Ref; ground)		
	-3047	Wire (Ref; chassis ground)		

NOTES

CHAPTER 75

ENGINE AIR SYSTEMS

Figure	*Title*	*Page*
75-1	Inducer Bleed System – Vent Box Installation	75.0

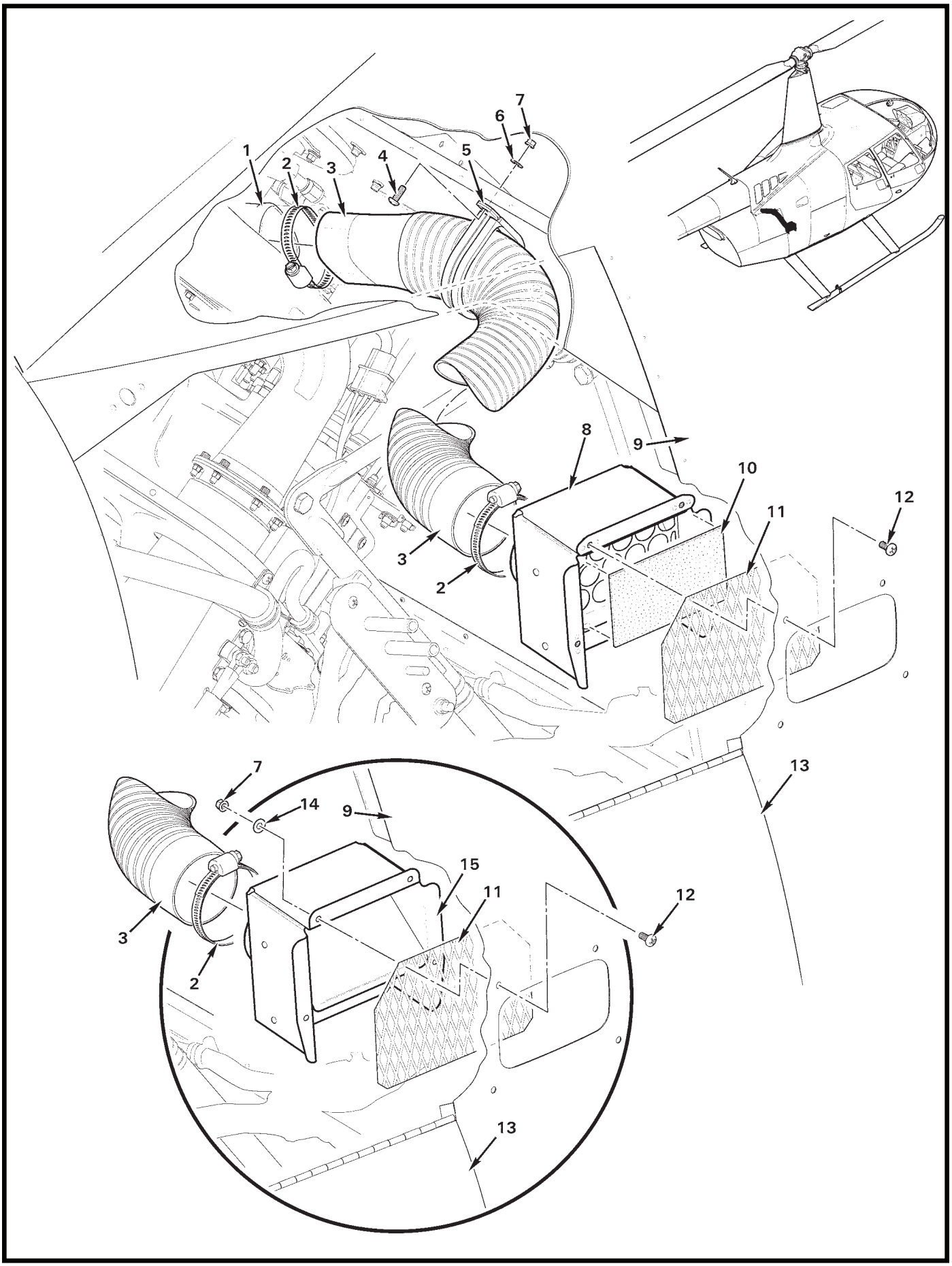
1
2
3
4
5
6
7
8
9
10
11
12
13
14
15

FIGURE AND INDEX NUMBER	PART NUMBER	DESCRIPTION	PARTS AVAIL	QTY PER ASSY
		INDUCER BLEED SYSTEM – VENT BOX INSTALLATION		
75-1-1	F009-1	Engine (Ref)		
2	B277-32	Clamp	X	2
3	A785-37	Hose	X	1
4	MS27039C0806	Screw	X	1
5	MS21919WCH38	Clamp	X	1
6	NAS1149FN832P	Washer	X	1
7	MS21042L08	Nut (G918-1 Rev "D" and higher [1]; G918-1 Rev "C" and prior [5])	X	5
8	G918-1	Box Assembly (Rev "D" and higher. Includes nutplates and retainer.)	X	1
9	G004-8	Panel (Ref)		
10	F771-7	Filter (Not used with G918-1 Rev "C" and prior.)	X	1
11	G918-5	Screen	X	1
12	MS27039C0807	Screw	X	4
13	G040-5	Door (Ref)		
14	NAS1149FN816P	Washer	X	4
15	G918-1	Box Assembly (Rev "C" and prior. Does not include nutplates or retainer.)	X	1

NOTES

Intentionally Blank

CHAPTER 76

ENGINE CONTROLS

Figure	*Title*	*Page*
76-1	Fuel Control Unit Controls Installation	76.0
76-5	Power Turbine Governor Control Installation	76.4
76-7	Actuator Assembly Installation	76.6

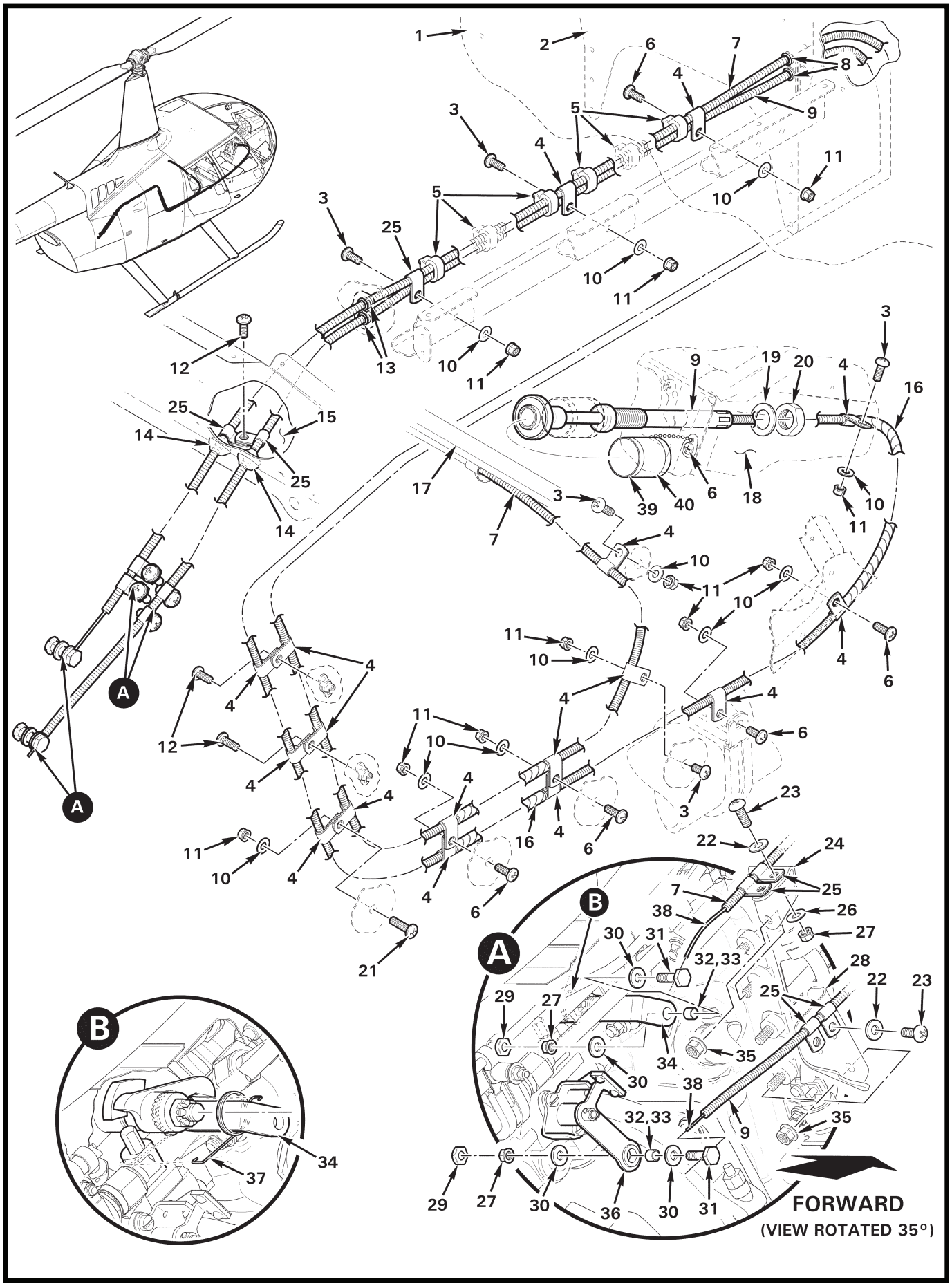
FORWARD
(VIEW ROTATED 35°)

FIGURE AND INDEX NUMBER	PART NUMBER	DESCRIPTION	PARTS AVAIL	QTY PER ASSY
		FUEL CONTROL UNIT CONTROLS INSTALLATION		
76-1-1	G259-1	Panel (Bulkhead; Ref)		
2	F386-2	Panel (Ref)		
3	MS27039C0806	Screw	X	5
4	AN742-3	Clamp	X	17
5	MS3367-7-9	Ty-rap (around items 7 and 9, [6 places])	X	6
6	MS27039C0807	Screw	X	6
7	C522-10	Control – Throttle (Incl item 38; see also Figure 67-21)	X	1
8	NAS557-4B	Grommet	X	2
9	A522-10	Control – Fuel Cutoff (Incl items 19, 20, and 38)	X	1
10	NAS1149FN816P	Washer	X	11
11	MS21042L08	Nut	X	11
12	MS27039C0808	Screw	X	3
13	NAS557-4A	Grommet (install using item 14)	X	2
14	B270-5	Sealant	X	A/R
15	G023-1	Ceiling Assembly – Baggage Compartment (Ref)		
16	B161-4	Spirap (2 places)	X	A/R
17	F758-1	Collective Stick Assembly (Ref, see Figure 67-21)		
18	F359-2	Panel (Ref)		
19	—	Washer	O	1
20	—	Nut	O	1
21	MS27039C0809	Screw	X	1
22	NAS1149F0363P	Washer	X	4
23	MS27039C1-08	Screw	X	4
24	F577-3	Bracket	X	1
25	AN742-4	Clamp	X	7
26	NAS1149F0332P	Washer	X	2
27	D210-3	Nut	X	3
28	F577-1	Bracket	X	1
29	B330-7	Palnut	X	2
30	C141-26	Washer	X	4
31	A462-4	Fitting	X	2
32	A130-48	Spacer (install using item 33)	X	2
33	A257-1	Grease	X	A/R
34	—	Throttle Arm (Ref)		
35	—	Nut (Ref)		

NOTES

Continues

FIGURE AND INDEX NUMBER	PART NUMBER	DESCRIPTION	PARTS AVAIL	QTY PER ASSY
		FUEL CONTROL UNIT CONTROLS INSTALLATION (Cont'd)		
76-1-36	—	Fuel Cutoff Arm (Ref)		
37	D930-2	Spring	X	1
38	SSW-050-C522-10	Inner Wire	X	2
39	A950-3	Guard Assembly – Fuel Cutoff Control (Incl item 40)	X	1
40	A654-45	Decal – "FUEL CONTROL..."	X	1

NOTES

Intentionally Blank

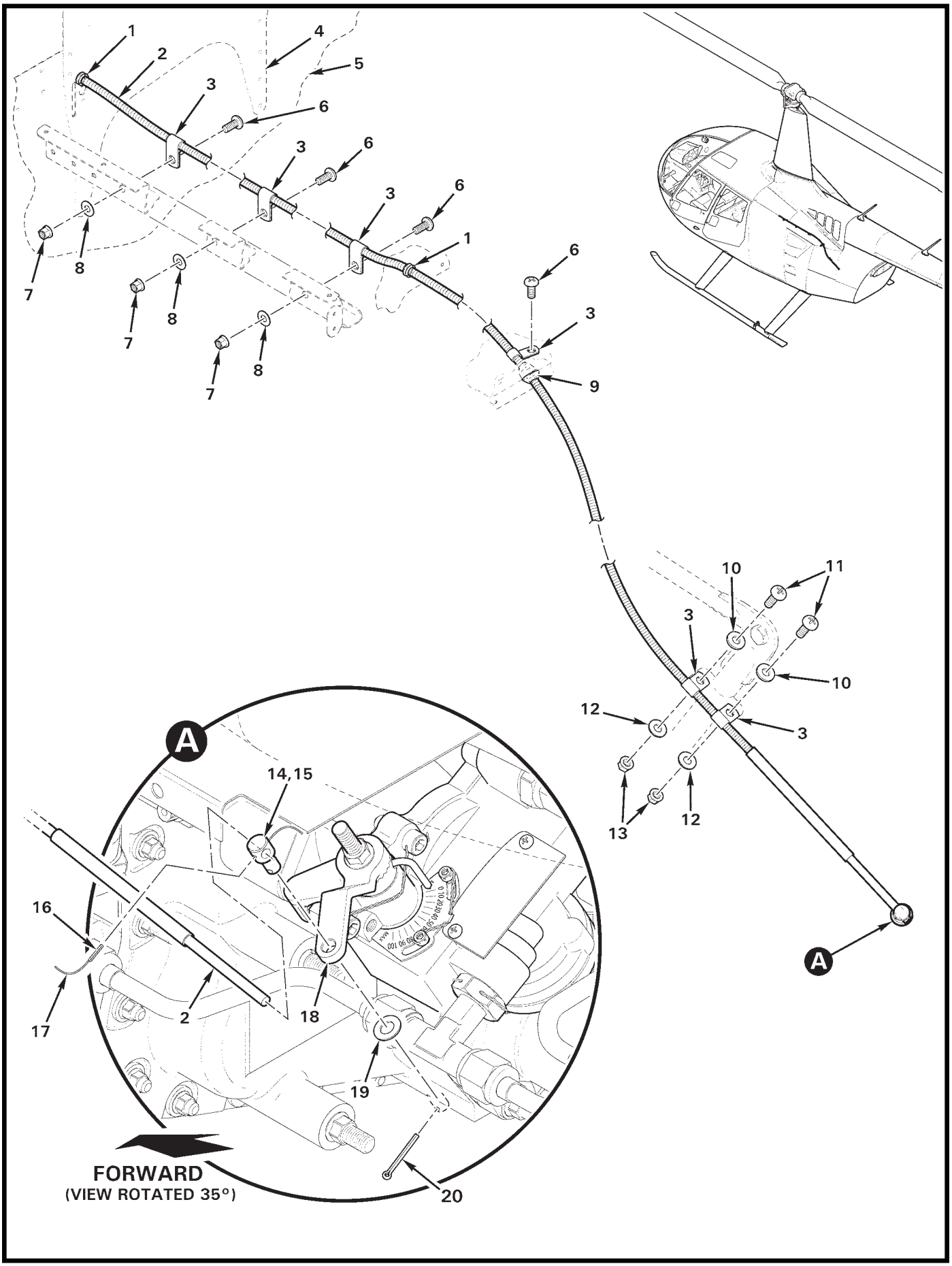

FIGURE 76-5 POWER TURBINE GOVERNOR CONTROL INSTALLATION

FIGURE AND INDEX NUMBER	PART NUMBER	DESCRIPTION	PARTS AVAIL	QTY PER ASSY
		POWER TURBINE GOVERNOR CONTROL INSTALLATION		
76-5-1	NAS557-4A	Grommet	X	1
2	C522-11	Control (Power Turbine Governor)	X	1
3	AN742-3	Clamp	X	6
4	F386-2	Cover (Ref)		
5	G259-1	Panel (Bulkhead; Ref)		
6	MS27039C0806	Screw	X	4
7	MS21042L08	Nut	X	3
8	NAS1149FN816P	Washer	X	3
9	B270-5	Sealant	X	A/R
10	NAS1149F0363P	Washer	X	2
11	MS27039C1-08	Screw	X	2
12	NAS1149F0332P	Washer	X	2
13	MS21042L3	Nut	X	2
14	D333-13	Fitting (install using item 15)	X	1
15	A257-1	Grease	X	A/R
16	MS16562-4	Spring Pin	X	1
17	MS20995C20	0.020 in. dia Safety Wire	X	A/R
18	—	Power Turbine Governor Input Lever (Ref)		
19	NAS1149F0432P	Washer	X	1
20	MS24665-210	Cotter Pin	X	1

NOTES

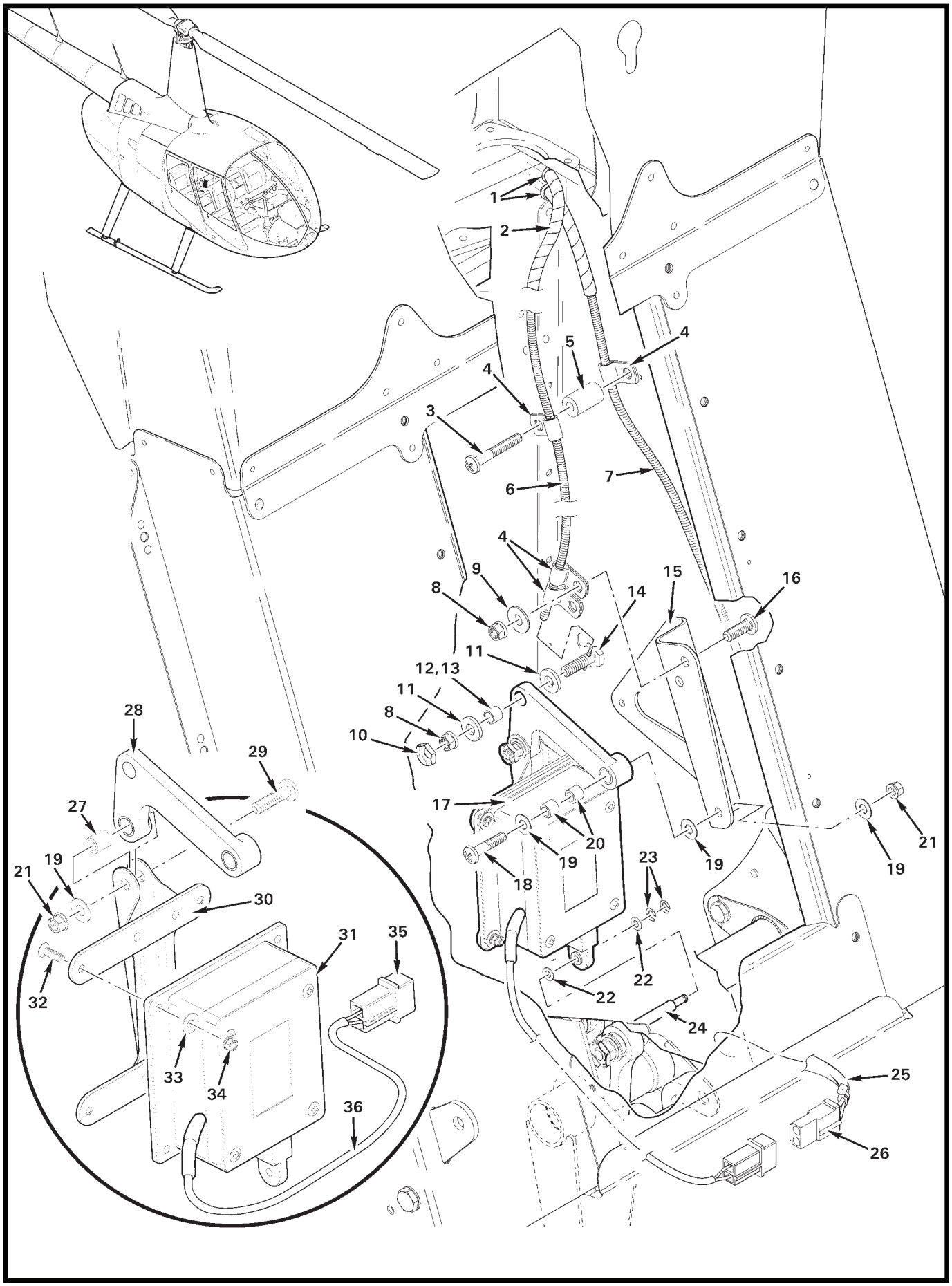
1
2
4
5
4
3
7
6
4
9
8
15
16
14
11
12,13
11
8
10
28
29
27
17
20
21
19
19
19
21
18
23
30
31
35
32
22
22
24
33
34
25
36
26

FIGURE AND INDEX NUMBER	PART NUMBER	DESCRIPTION	PARTS AVAIL	QTY PER ASSY
		ACTUATOR ASSEMBLY INSTALLATION		
76-7-1	NAS557-4A	Grommet	X	2
2	B161-4	Spirap	X	A/R
3	MS27039C0817	Screw	X	1
4	AN742-3	Clamp	X	4
5	A130-50	Spacer	X	1
6	C522-11	Control (actuator)	X	1
7	A522-11	Control (fuel shutoff; Ref)		
8	MS21042L3	Nut	X	3
9	NAS1149F0332P	Washer	X	2
10	B330-7	Palnut	X	1
11	NAS1149E0363R	Washer	X	2
12	A130-48	Spacer (install using item 13)	X	1
13	A257-1	Grease	X	A/R
14	A462-4	Fitting	X	1
15	F381-6	Bracket (Ref)		
16	MS27039C1-08	Screw	X	2
17	F334-2	Actuator Assembly (Incl items 8, 10 thru 14, 18, 20 thru 23, and 27 thru 34)	X	1
18	MS27039C0812	Screw	X	1
19	NAS1149FN816P	Washer	X	3
20	A105-7	Journal	X	2
21	MS21042L08	Nut	X	1
22	NAS620-5	Washer	X	2
23	MS16633-2012	Retainer Ring	X	2
24	F334-1	Support Assembly (Ref)		
25	F059	Wire Harness (cabin electrical; Ref)		
26	B263-13	Housing	X	1
	B263-2	Socket	X	2
27	A105-5	Journal	X	1
28	F822-1	Bellcrank Assembly	X	1
29	MS27039C0810	Screw	X	1
30	F821-1	Arm Assembly	X	1
31	F820-1	Actuator Assembly (Incl items 35 and 36)	X	1
32	MS24693-S4	Screw	X	4
33	NAS1149FN416P	Washer	X	4

NOTES

Continues

FIGURE AND INDEX NUMBER	PART NUMBER	DESCRIPTION	PARTS AVAIL	QTY PER ASSY
		ACTUATOR ASSEMBLY INSTALLATION (Cont'd)		
76-7-34	MS21042L04	Nut	X	1
35	B263-12	Housing	X	1
	B263-1	Pin	X	2
36	B158-2	Heat Shrink	X	A/R

NOTES

CHAPTER 79

ENGINE OIL SYSTEM

Figure	*Title*	*Page*
79-1	Cooling Scroll Assembly	79.0
79-3	Cooling Duct Box Assemblies	79.2
79-5	Engine – Oil Tank Installation	79.4
79-7	Engine – Oil Cooler Installation	79.6
79-9	Engine – Oil Lines Installation	79.8

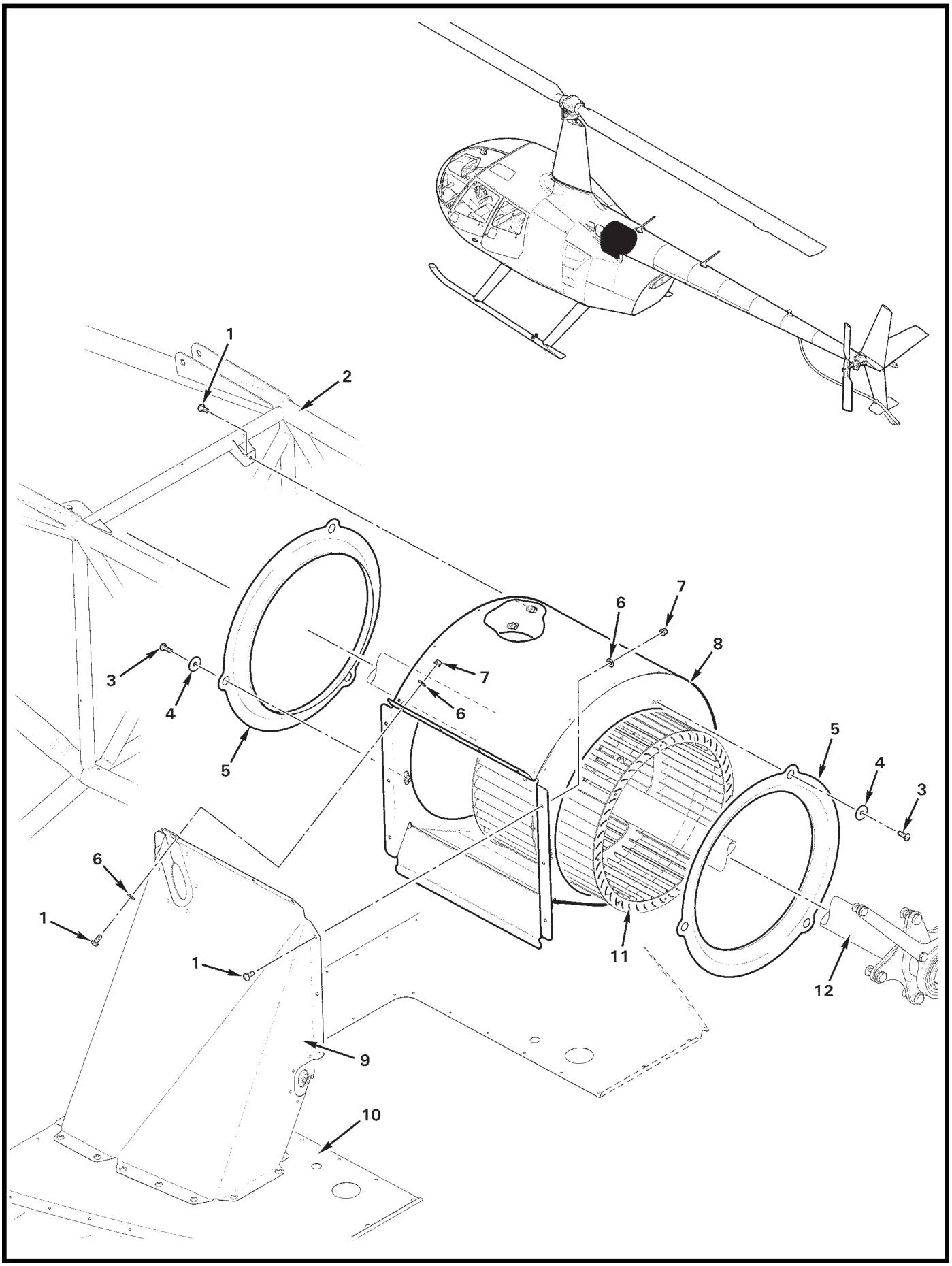
1
2
3
4
5
6
7
8
9
10
11
12

FIGURE AND INDEX NUMBER	PART NUMBER	DESCRIPTION	PARTS AVAIL	QTY PER ASSY
		COOLING SCROLL ASSEMBLY		
79-1-1	MS27039C0806	Screw	X	11
2	F020-1	Upper Frame (Ref)		
3	MS27039C0807	Screw	X	6
4	A141-18	Washer	X	6
5	F305-5	Inlet	X	2
6	NAS1149FN816P	Washer	X	12
7	MS21042L08	Nut	X	10
8	F236-1	Scroll Assembly (install using item 13)	X	1
9	F306-1	Box Assembly (Ref)		
10	G234-1	Firewall (Ref)		
11	G174-1	Fanwheel Assembly (Ref; see Figure 65-1)		
12	F196-1	Tail Rotor Drive Shaft Weldment – Fan (Ref; see Figure 65-1)	X	1
13	A701-1	Tape – Aluminum Foil (to cover all interior gaps)	X	A/R

NOTES

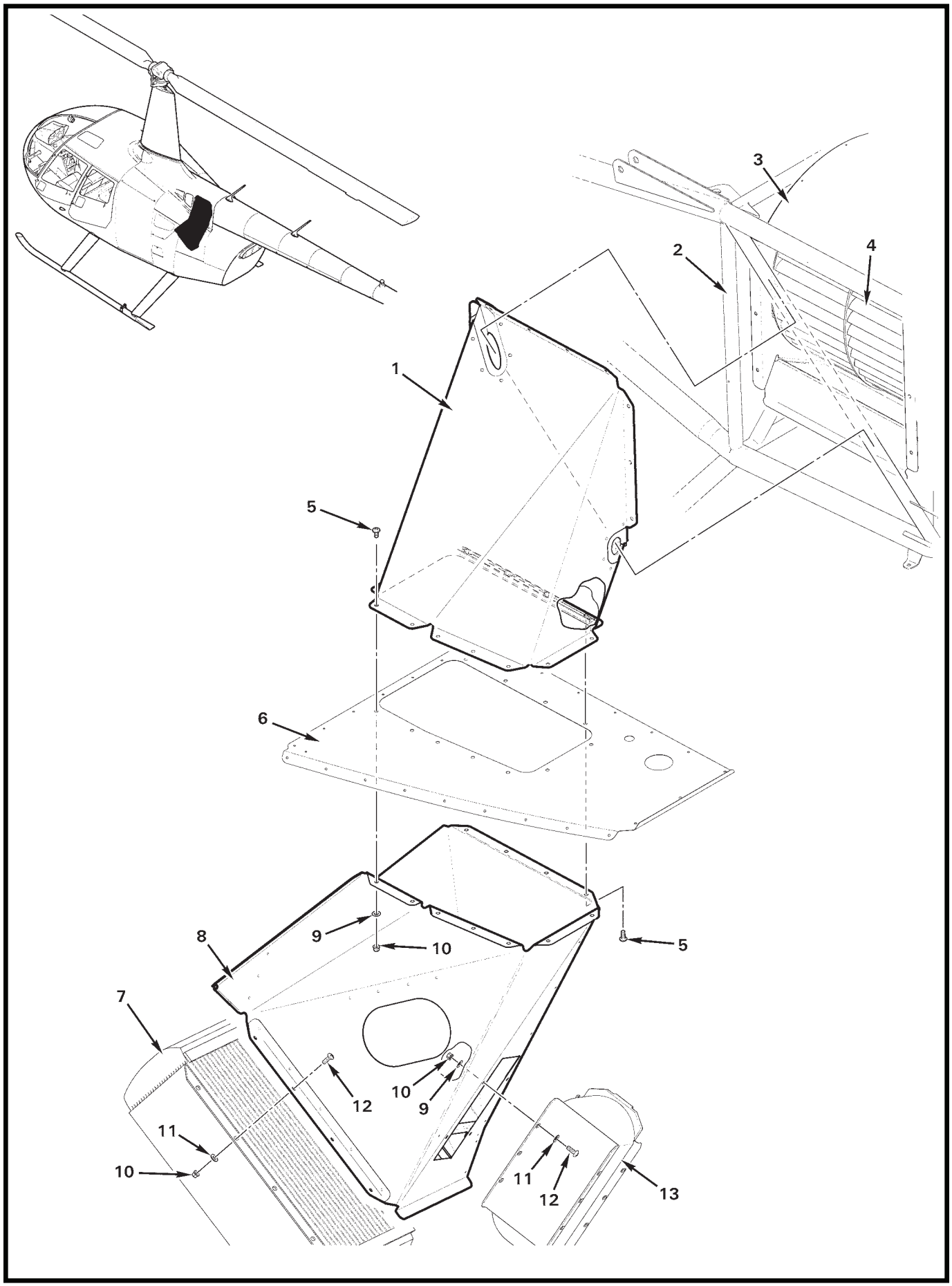

FIGURE 79-3 COOLING DUCT BOX ASSEMBLIES

FIGURE AND INDEX NUMBER	PART NUMBER	DESCRIPTION	PARTS AVAIL	QTY PER ASSY
		COOLING DUCT BOX ASSEMBLIES		
79-3-1	F306-1	Box Assembly (install using item 14)	X	1
2	F020-1	Upper Frame (Ref)		
3	F236-1	Scroll Assembly (Ref)		
4	G174-1	Fanwheel Assembly (Ref; see Figure 65-1)		
5	MS27039C0805	Screw	X	11
6	G234-1	Firewall (Ref)		
7	F649-1	Oil Cooler (engine, Ref)		
8	F309-1	Box Assembly (install using item 14)	X	1
9	NAS1149FN816P	Washer	X	15
10	MS21042L08	Nut	X	19
11	NAS1149FN832P	Washer	X	12
12	MS27039C0807	Screw	X	12
13	C649-4	Oil Cooler (main rotor gearbox, Ref)		
14	A701-1	Tape – Aluminum Foil (to cover all interior gaps)	X	A/R

NOTES

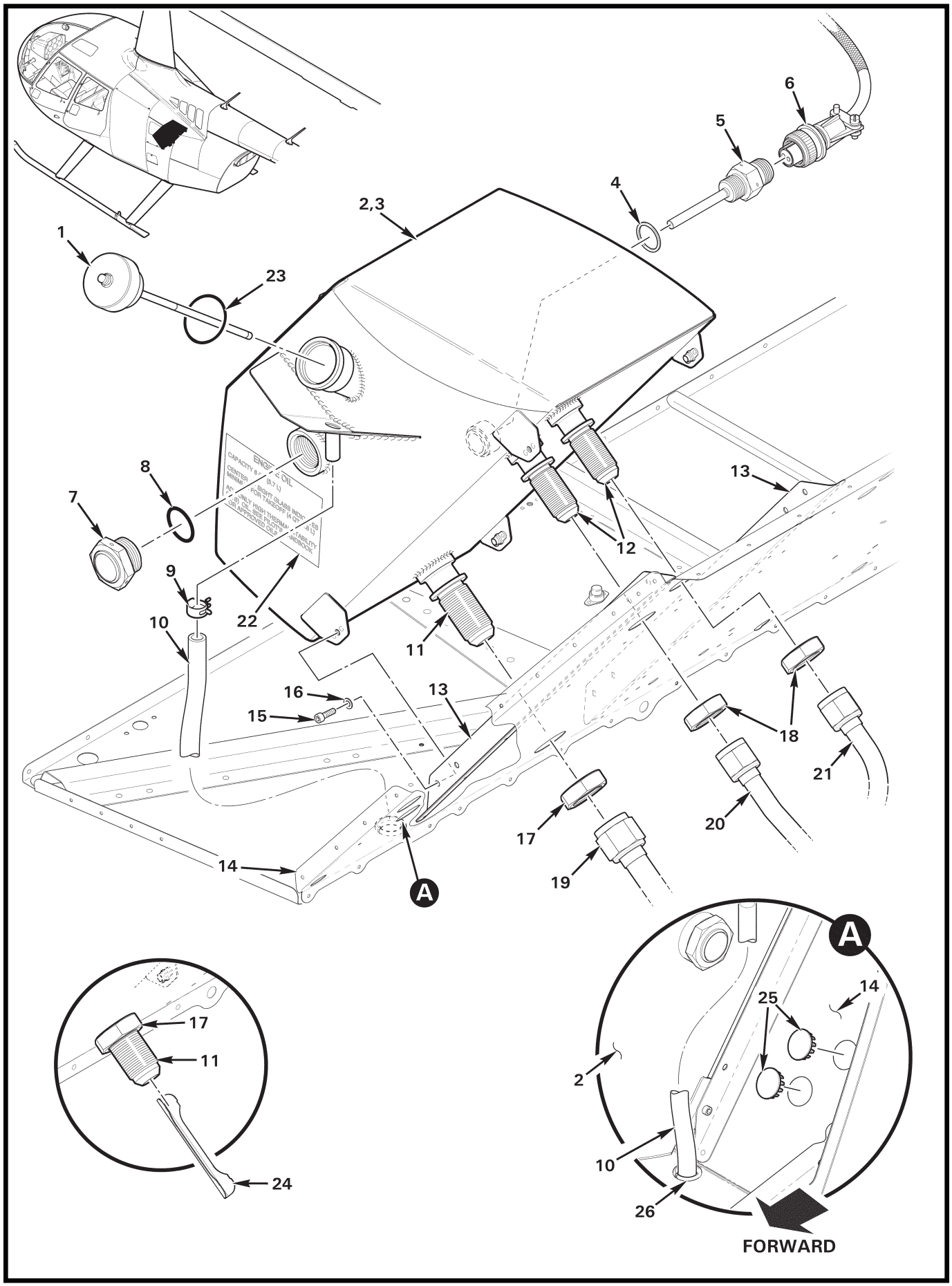
1
2,3
4
5
6
7
8
9
10
11
12
13
14
15
16
17
18
19
20
21
22
23
24
25
26
A
FORWARD

FIGURE AND INDEX NUMBER	PART NUMBER	DESCRIPTION	PARTS AVAIL	QTY PER ASSY
		ENGINE – OIL TANK INSTALLATION		
79-5-1	G723-1	Dipstick (Incl item 23)	X	1
2	G689-1	Oil Tank Assembly (Incl items 11 and 12)	X	1
3	A257-23	Oil	X	A/R
4	MS29561-015	Packing (install using A257-18 lube)	X	1
5	MS28034-1	Oil Temp Sender (discard gasket)	X	1
6	F859-1	Harness Assembly (Ref)		
7	B563-2	Sight Gage	X	1
8	A215-020	O-Ring (install using A257-18 lube)	X	1
9	D277-8	Clamp	X	1
10	A729-46	Tube (Ref)		
11	—	Fitting (Ref)		
12	—	Fitting (Ref)		
13	F384-3	Angle	X	2
14	F234-1	Firewall (Ref)		
15	NAS1352-08-8P	Screw	X	4
16	NAS1149FN816P	Washer	X	4
17	A880-1010	Nut	X	1
18	A880-1008	Nut	X	2
19	F723-1	Line Assembly (Ref)		
20	F723-4	Line Assembly (Ref)		
21	F723-3	Line Assembly (Ref)		
22	F654-3	Decal	X	1
23	74068*	O-ring	X	1
24	G805-1	Angle (Installed in G689-1 oil tanks rev. J and prior. See R66 SB-21 for additional information.)	X	1
25	B209-2	Plug (installed when A/C system not installed)	X	A/R
26	NAS557-8A	Grommet	X	1

NOTES * Lycoming part number.

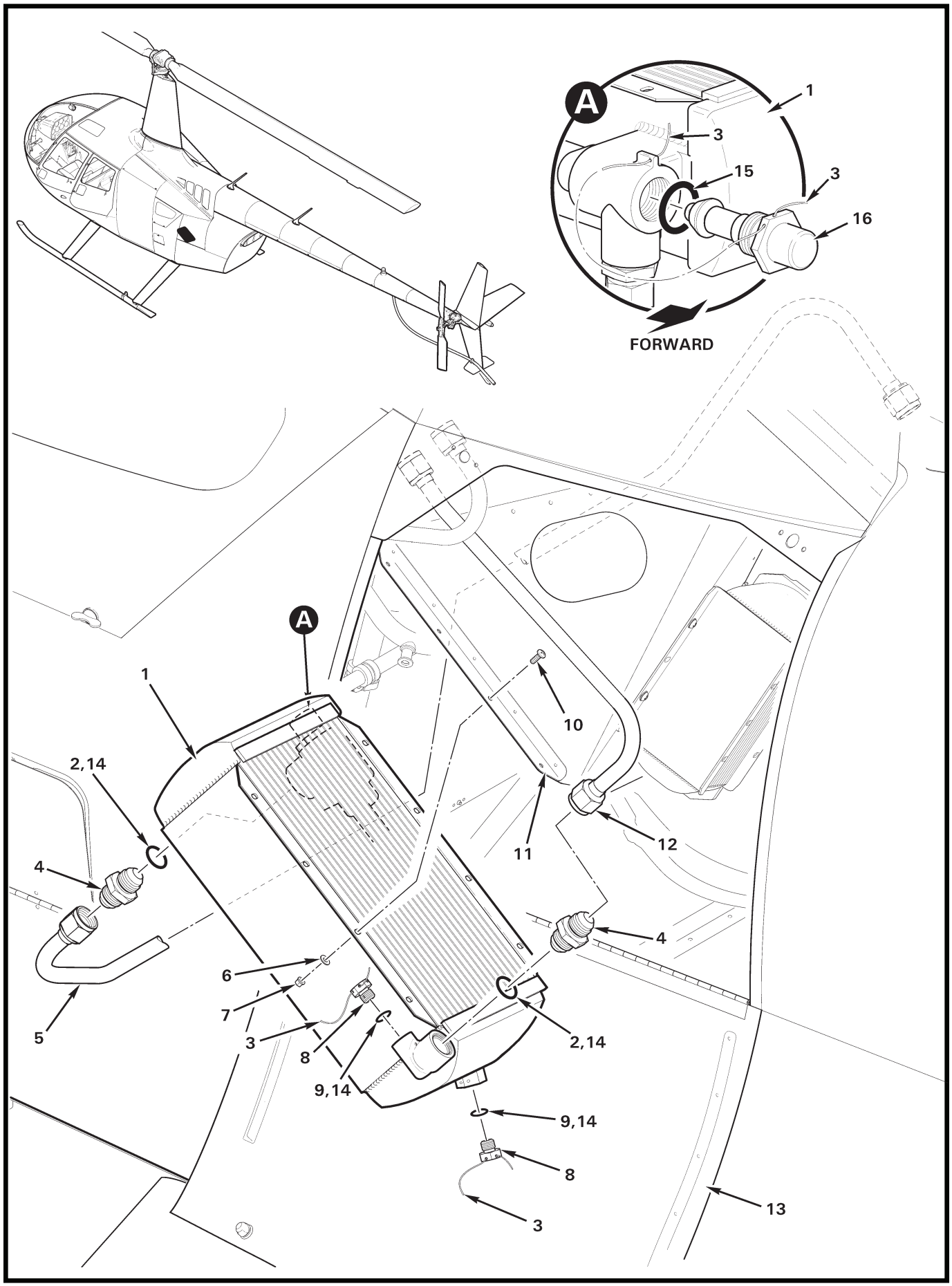
A
1
3
15
3
16
FORWARD
A
1
2,14
4
5
6
7
3
8
9,14
10
11
12
4
2,14
9,14
8
3
13

FIGURE AND INDEX NUMBER	PART NUMBER	DESCRIPTION	PARTS AVAIL	QTY PER ASSY
		ENGINE – OIL COOLER INSTALLATION		
79-7-1	F649-1	Oil Cooler Assembly (incl items 15 and 16)	X	1
2	MS28778-8	Packing (o-ring; install using item 14)	X	2
3	MS20995C32	0.032 in. dia Safety Wire (optional)	X	A/R
4	AN815-8D	Union	X	2
5	F723-2	Line Assembly (Ref)		
6	NAS1149FN832P	Washer	X	8
7	MS21042L08	Nut	X	8
8	AS5169D04L	Fitting	X	2
9	MS28778-4	Packing (o-ring; install using item 14)	X	2
10	MS27039C0807	Screw	X	8
11	F309-1	Box Assembly (Ref)		
12	F723-4	Line Assembly (Ref)		
13	G040-5	Door (Ref)		
14	A257-18	Lubricant	X	A/R
15	MS29512-12	Packing (o-ring; or MS28778-12)	X	1
16	724155	Thermostat	X	1

NOTES

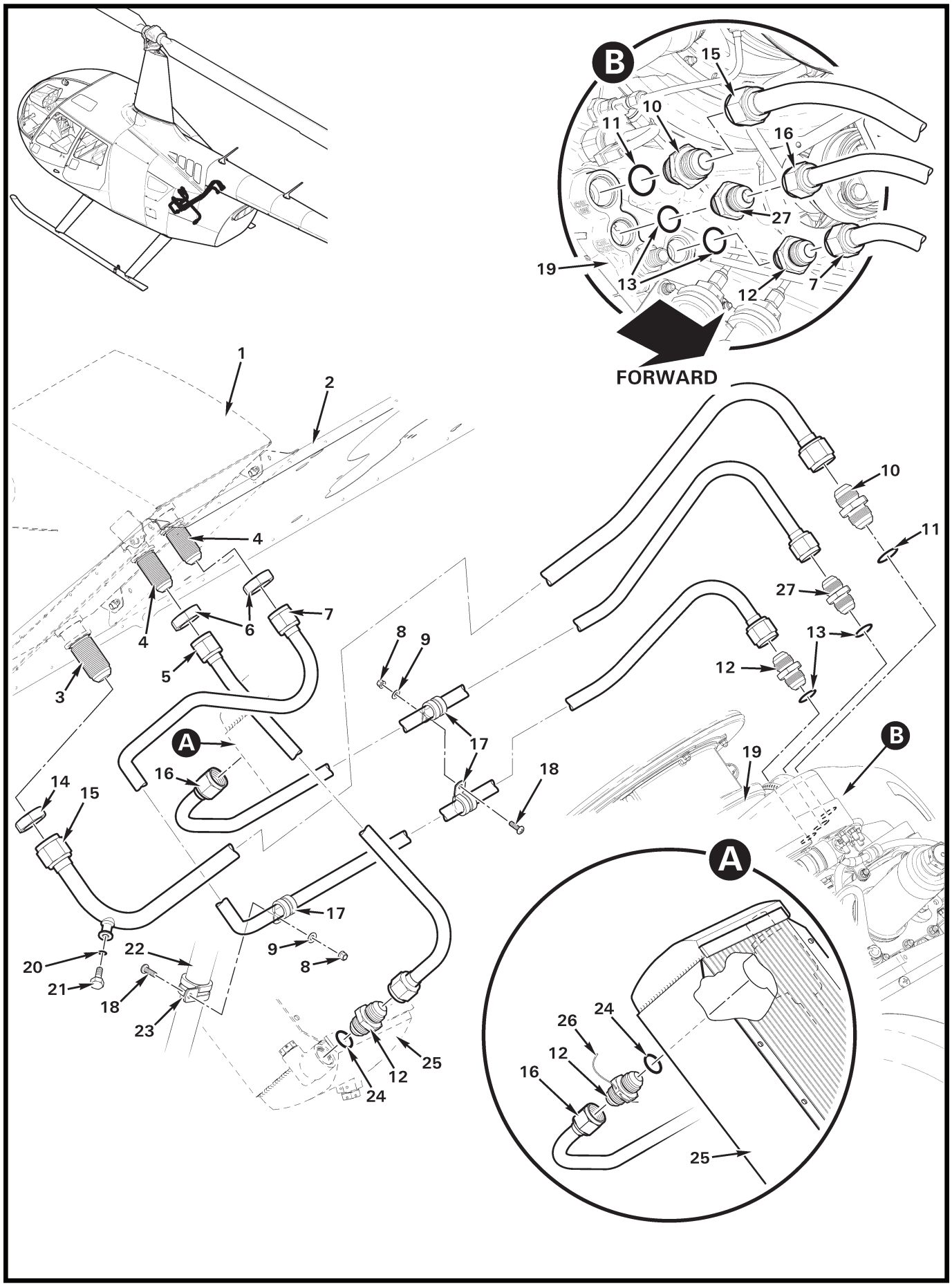
B
15
10
11
16
27
19
13
12
7
FORWARD
1
2
4
4
6
7
5
3
8
9
17
18
A
16
14
15
17
9
8
22
20
21
18
23
25
12
24
10
11
27
13
12
19
B
A
24
26
12
16
25

FIGURE AND INDEX NUMBER	PART NUMBER	DESCRIPTION	PARTS AVAIL	QTY PER ASSY
		ENGINE – OIL LINES INSTALLATION		
79-9-1	G689-1	Oil Tank Assembly (Ref; see Figure 79-5)		
2	F234-1	Firewall (Ref)		
3	G689-14	Fitting (Ref)		
4	G689-13	Fitting (Ref)		
5	F723-4	Line Assembly	X	1
6	AN924-8D	Nut	X	2
7	F723-3	Line Assembly	X	1
8	MS21042L08	Nut	X	2
9	NAS1149FN816P	Washer	X	2
10	A880-910	Union (or AN815-10D)	X	1
11	NAS617-10	Packing (o-ring)	X	2
12	A880-908	Union (or AN815-8D)	X	3
13	NAS617-8	Packing (o-ring)	X	1
14	AN924-10D	Nut	X	1
15	F723-1*	Line Assembly	X	1
16	F723-2	Line Assembly	X	1
17	MS21919WCH8	Clamp	X	3
18	MS27039C0807	Screw	X	2
19	F145-1	Engine (Ref)		
20	A215-902	O-Ring (replaceable)	X	1
21	B289-2	Bolt (includes item 20 and PTFE washer [not shown])	X	1
22	F046-1	Frame Weldment (Ref)		
23	MS21919WCH14	Clamp	X	1
24	MS28778-8	Packing (o-ring)	X	2
25	F649-1	Oil Cooler (Ref)		
26	MS20995C32	0.032 in. dia Safety Wire (earlier ships)	X	A/R
27	A880-908	Union (or AN815-8D)	X	1
	CV26-77	Check Valve (earlier R66s; replace with A880-908 union)	O	1

NOTES * Optional: Install AS4824N10 gaskets at flares as required for sealing.

Intentionally Blank

CHAPTER 90

POLICE VERSION

Figure	Title	Page
–	R66 Police Equipment	90.iv
–	R66 Police Equipment	90.vi
90-1	C060-3 Interior Light Installation	90.0
90-3	C813-5 Transceiver Installation (G070 Console)	90.2
90-5B	C813-4 Transceiver Installation (G060 Console)	90.5A
90-7	C813-2 Transceiver Installation	90.6
90-7B	G460-2 Audio Control Installation	90.7A
90-9	G460-1 Audio Control Installation	90.8
90-13	C823-16 Dual Audio Control Installation	90.12
90-15	C849-4 Blower Installation	90.14
90-17	F051-1 Camera System Installation – Gimbal Fairing and Cover	90.16
90-19	F051-1 Camera System Installation – Gimbal and Lower Support Assembly	90.18
90-21	F051-1 Camera System Installation – Upper Gimbal Support Assembly	90.20
90-23	F051-1 Camera System Installation – Electronics Control Unit & Controller Assembly	90.22
90-25	F060-2 Intercom System Installation – Audio Control	90.24
90-27	F060-2 Intercom System Installation – Floor Switches	90.26
90-29	F079-1 PA/Siren System – Speaker Installation	90.28
90-31	F079-1 PA/Siren System – Components Installation	90.30
90-33	F081 Searchlight Installation – Gimbal and Gearmotor Assemblies	90.32
90-37	F081 Searchlight Installation – Slass ECU and Junction Box Assembly	90.36
90-39	F081 Searchlight Installation – Control Assembly	90.38
90-39B	F818 GTN 6XX-series GPS/NAV/COM Installation (G070 Console)	90.39A
90-41	G415-1 DVR Installation (Optional)	90.40
90-43	G416-5 Monitor Installation	90.42
90-45B	G416-4 Monitor Installation	90.45A
90-47	G416-1 Monitor Installation	90.46
90-51	Pilot’s Side Console – GDU 1060 TXi Display	90.50
90-53B	Pilot’s Side Console – GPS/NAV/COM Installation	90.53A

CHAPTER 90

POLICE VERSION (Cont'd)

Figure	*Title*	*Page*
90-55	G423-1 Aux Electrical System – 28-to-14V Converter & CB Panel . .	90.54
90-57	G423-1 Aux Electrical System – Harness Assembly	90.56
90-59	G423-1 Aux Electrical System – Relay	90.58
90-61	G425-1 Wall Installation	90.60
90-63	G437-1 Lojack Installation – Display	90.62
90-65	G437-1 Lojack Installation – Receiver	90.64
90-67	G437-1 Lojack Installation – Antennas	90.66
90-69	G608 Mapping System – Computer Installation	90.68
90.71B	G608-7/-8 Mapping System – Computer Installation	90.71A
90-73	G608 Mapping System – Components Installation	90.72
90-75	G608-1 Mapping System Installation	90.74
90-77	G685-1 Aux Strobe Installation	90.76
90-79	G749-1 Aft Console Installation	90.78

Intentionally Blank

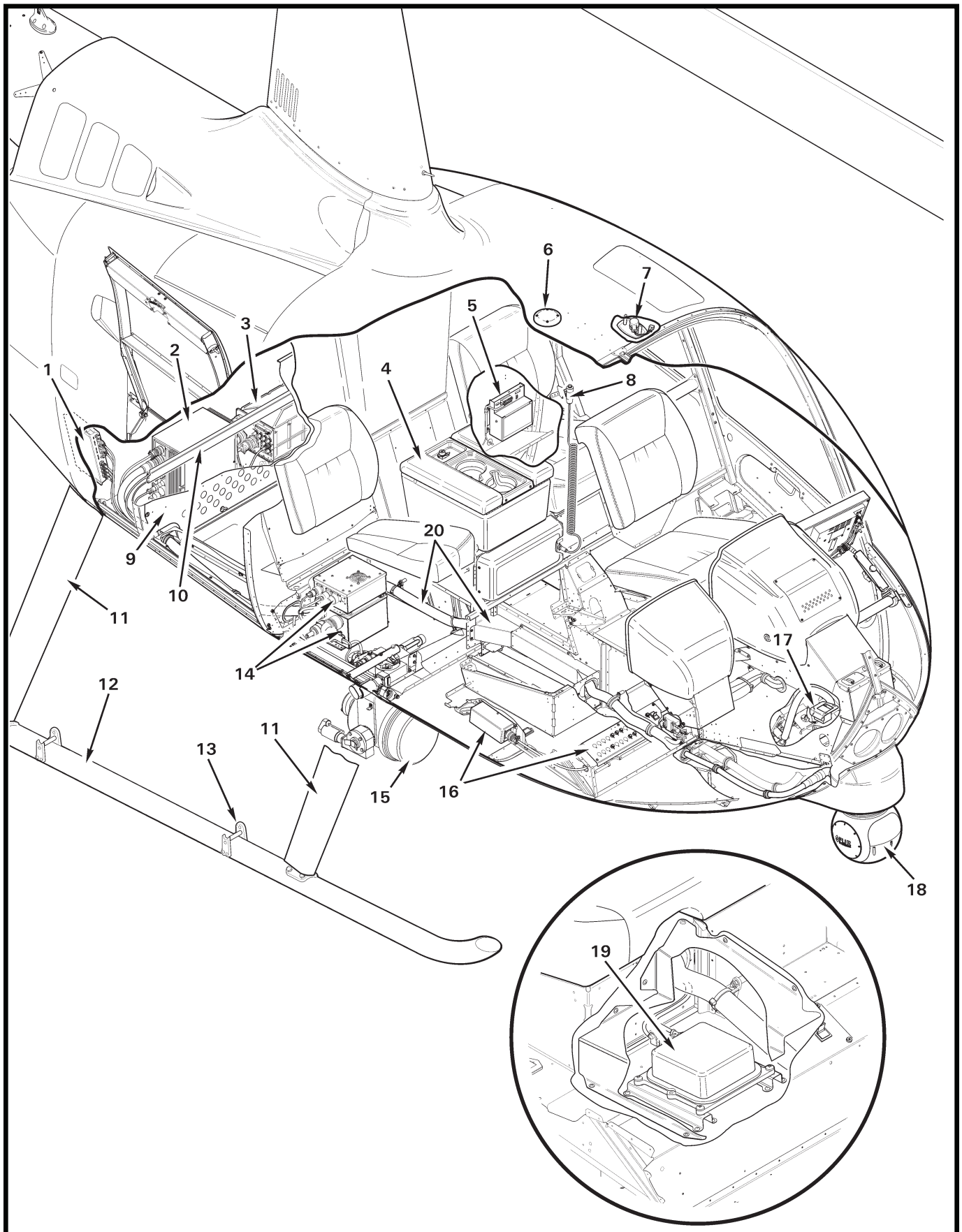

POLICE EQUIPMENT

ITEM NUMBER	DESCRIPTION	FIGURE
	R66 POLICE EQUIPMENT	
–	Robinson R66 Police Helicopter Equipment Installation (Incl items 1 thru 19, and items 1 thru 13 on page 90.vii.)	–
1	Lojack Receiver	90-65
2	Camera Control Unit	90-23
3	Mapping System Computer	90-69 90-75
4	Aft Console	90-79
5	PA/Siren Amplifier	90-31
6	Mapping System Antenna	90-73
7	Interior Light	90-1
8	Remote Transmit Switch	97-53
9	Wall Installation	90-61
10	Beam Installation	90-61
11	Landing Gear Fairing	32-5
12	Extended Landing Gear	32-1
13	C719-1 Ground Handling Wheel Support	32-1
14	Searchlight ECU and Junction Box	90-37
15	Searchlight	90-33
16	Power Converter and Aux Circuit Breaker Panel	90-55
17	Avionics Blower	90-15
18	FLIR Gimbal Camera	90-17 90-19 90-21
19	Mapping System IMU Sensor	90-73
20	G423 Aux Electrical System – Harness Assembly	90-56

NOTES

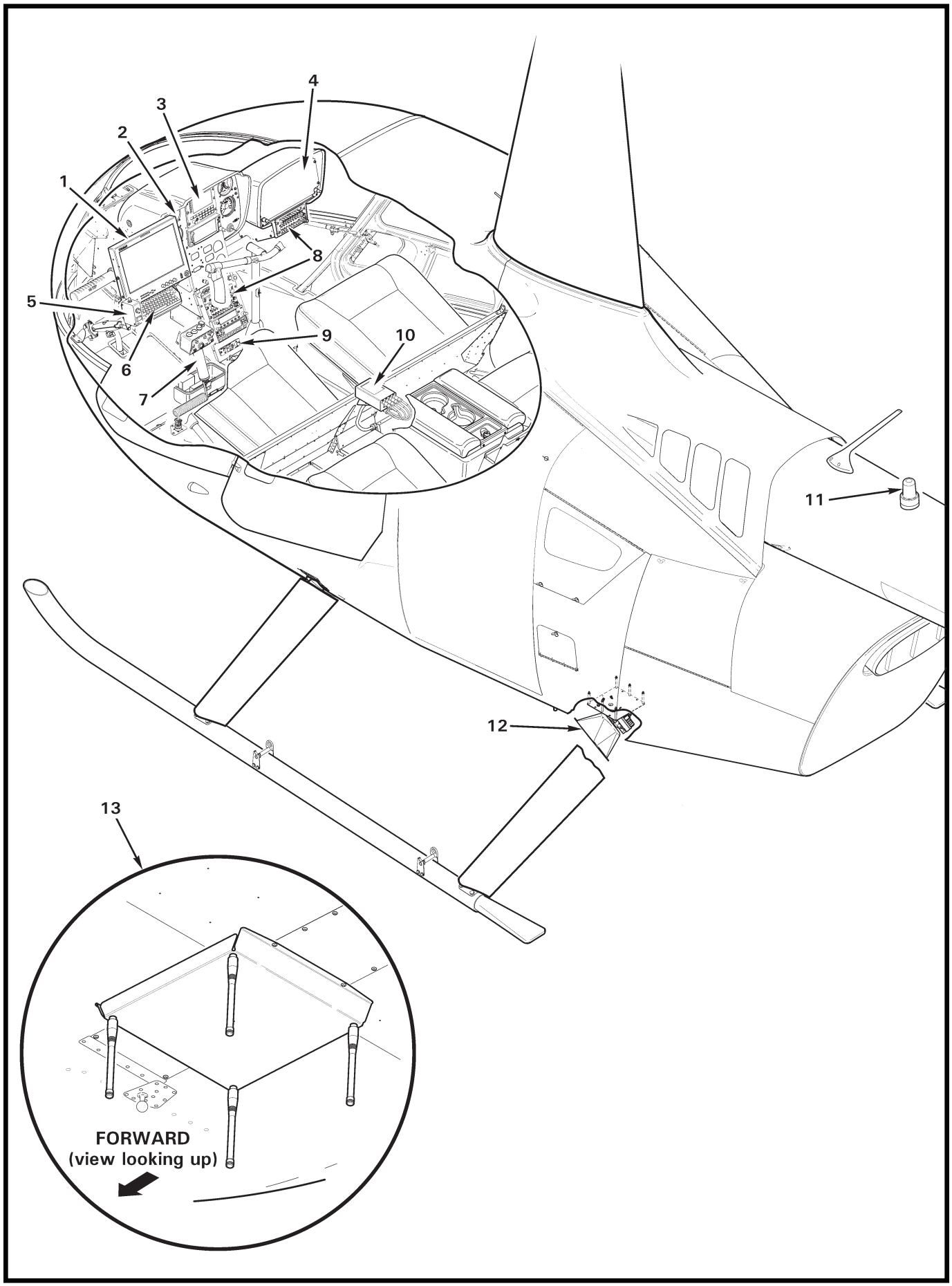
1
2
3
4
5
6
7
8
9
10
11
12
13
FORWARD
(view looking up)

ITEM NUMBER	DESCRIPTION	FIGURE
	R66 POLICE EQUIPMENT	
1	Co-Pilot Monitor	90-43 90-45B 90-47
2	Airspeed Indicator	95-1 95-27
3	Transceiver Installation	90-3 90-5B 90-7 90-39B
4	Pilot Side Console – EFIS Monitor	90-51
	Pilot Side Console – GPS/NAV/COM	90-53B
5	Searchlight	90-33 90-37 90-39
6	Mapping System Keyboard	90-69 90-75
7	Camera Controller	90-23
8	Audio Control Installation	90-7B 90-9 90-13 90-25
9	PA/Siren Control	90-31
10	DVR Installation	90-41
11	Aux Strobe Light	90-77
12	PA/Siren System Speaker	90-29
13	Lojack Antennas	90-67

NOTES

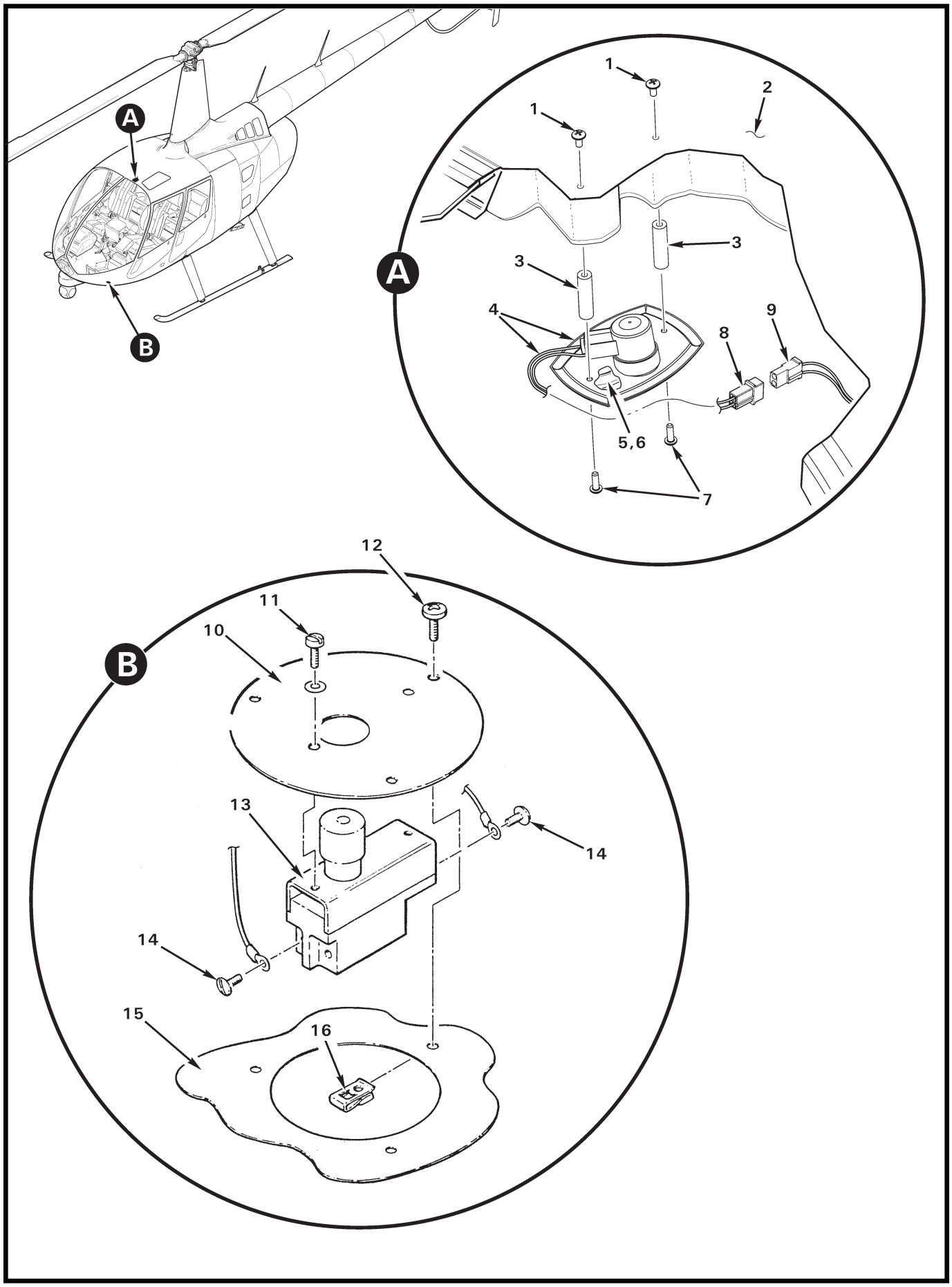
A
B
1
1
2
3
3
4
5,6
7
8
9
12
11
10
13
14
14
15
16

FIGURE AND INDEX NUMBER	PART NUMBER	DESCRIPTION	PARTS AVAIL	QTY PER ASSY
		C060-3 INTERIOR LIGHT INSTALLATION		
90-1-1	AN526C832R6	Screw	X	2
2	F273-1	Roof (Ref)		
3	D098-3	Spacer	X	2
4	D098-1	Light Assembly (Incl item 5 and 6)	X	1
5	A226-15	Trim (install using item 6 as required)	X	A/R
6	B270-17	Adhesive	X	A/R
7	MS27039C0805	Screw	X	2
8	B263-12	Housing	X	1
	B263-1	Pin	X	2
9	B263-13	Housing (Ref)		
	B263-2	Socket (Ref)		
10	A797-1	Cover	X	1
11	AN502-6-6	Screw (or NAS1351-06-6P)	X	2
12	MS27039C0806	Screw	X	3
13	B525-1	Switch (light; includes item 14)	X	1
14	—	Screw	O	2
15	F232-1	Panel – Floor (Ref, LH)		
16	B162-3	Clipnut	X	3

NOTES

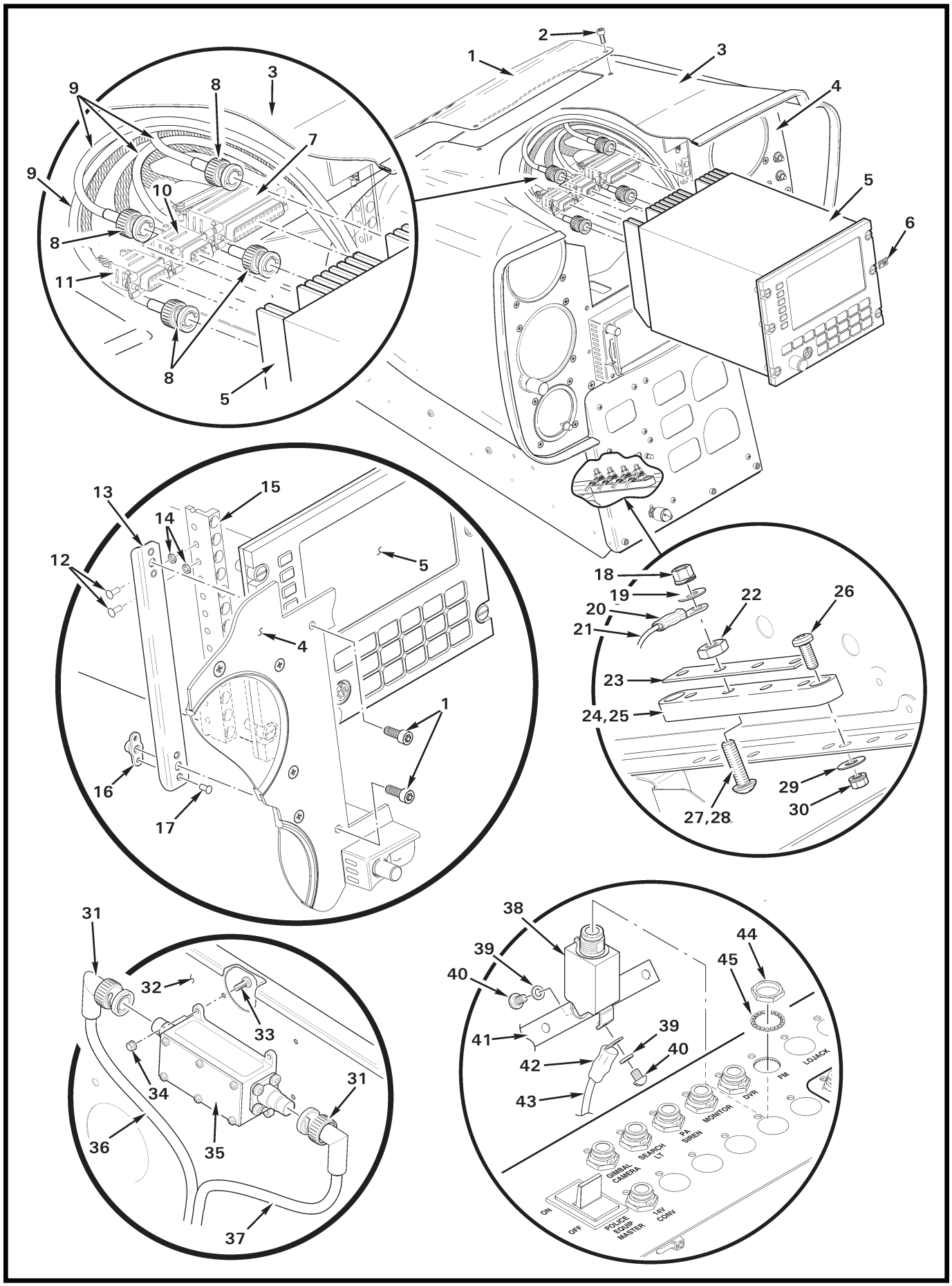

FIGURE 90-3 C813-5 TRANSCEIVER INSTALLATION (G070 CONSOLE)

FIGURE AND INDEX NUMBER	PART NUMBER	DESCRIPTION	PARTS AVAIL	QTY PER ASSY
		C813-5 TRANSCEIVER INSTALLATION (G070 CONSOLE)		
90-3-1	G413-14	Cover	X	1
2	NAS1352-08-8	Screw	X	4
3	G070	Console Assembly (Ref)		
4	G075	Face (Ref)		
5	TDFM-9000	Transceiver (FM)	X	1
6	G682-24	Decal – "FM" (installed on item 4)	X	1
7	B269-12	Socket Receptacle (25-socket; reference wires -2778 [2], -2775 [2], -1908 [2, white and blue], -1911 [2, white and blue], and -1914 [2, white and blue])	X	1
	B269-23	Backshell	X	1
8	5225395-6	Plug (BNC)	X	A/R
9	—	Cable (Ref, to antenna)		
10	B269-77	Plug (15-pin; reference wires -1909 [2, white and blue], -1912 [2, white and blue], -1915 [2, white and blue], and -2394 [2, white and blue])	X	1
	B269-22	Backshell	X	1
11	B269-78	Socket Receptacle (15-socket; reference wire -2395[white] and -2395[blue])	X	1
	B269-22	Backshell	X	1
12	MS20470AD4	Rivet	X	8
13	G413-9	Angle Assembly (Incl items 16 and 17)	X	2
14	NAS620-5	Washer	X	A/R
15	A917-8	Strip	X	2
16	MS21069L08	Nutplate	X	2
17	NAS1097AD3	Rivet	X	4
18	MS21042L08	Nut	X	4
19	NAS1149FN816P	Washer	X	4
20	B260-3	Terminal	X	1
21	-2773	Wire (Ref; ground)		
22	B301-8	Nut	X	4
23	A448-10	Bus Bar (4 holes)	X	1
24	C448-2	Block Assembly (Incl items 22, 23, 25, 27, and 28)	X	1
25	C448-5	Block (Ref)		
26	MS35206-228	Screw	X	4
27	B567-43	Screw (install using item 28 under head)	X	4
28	B270-9	Adhesive	X	A/R

NOTES

Continues

FIGURE AND INDEX NUMBER	PART NUMBER	DESCRIPTION	PARTS AVAIL	QTY PER ASSY
		C813-5 TRANSCEIVER INSTALLATION (G070 CONSOLE; Cont'd)		
90-3-29	NAS620-6	Washer	X	2
30	MS21042L06	Nut	X	2
31	5225973-4	Plug (90° BNC)	X	2
32	F033-1	Console Assembly – Lower (Ref)		
33	MS35206-214	Screw	X	2
34	MS21042L04	Nut	X	2
35	133956-1	Filter (required when VHF module is installed)	X	1
36	–	Cable (to item 5, Ref)		
37	–	Cable (to VHF antenna, Ref)		
38	B297-10	Circuit Breaker (10 amp; includes items 39, 40, 44, and 45)	X	1
39	–	Lockwasher	O	2
40	–	Screw	O	2
41	A448-12	Bus Bar (12 hole)	X	1
42	B260-2	Terminal	X	1
43	–2772	Wire (Ref; power)		
44	–	Nut	O	1
45	–	Lockwasher	O	1

NOTES

Intentionally Blank

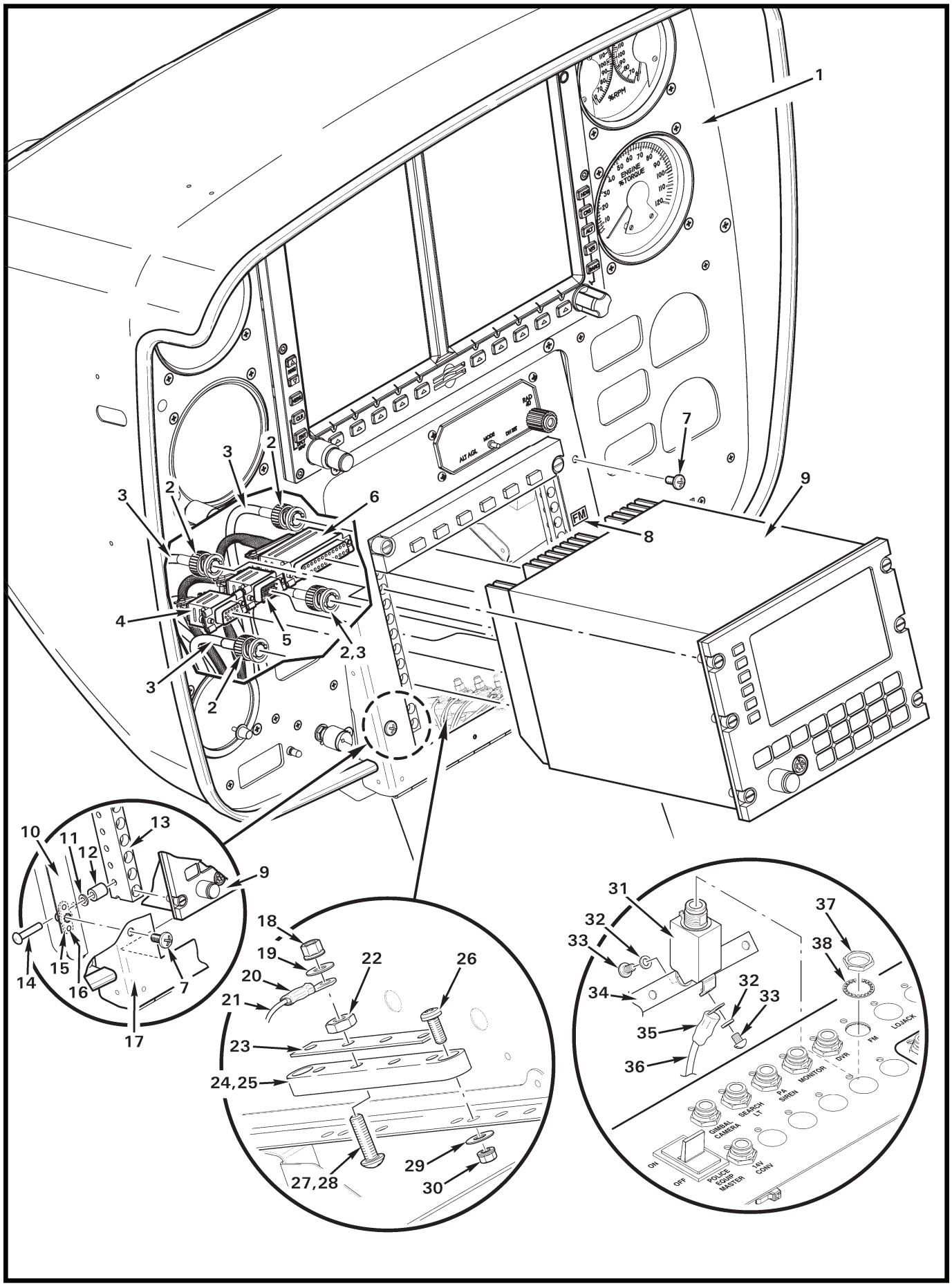
1
2
3
4
5
6
7
8
9
10
11
12
13
14
15
16
17
18
19
20
21
22
23
24,25
26
27,28
29
30
31
32
33
34
35
36
37
38
2,3
%RPM
ENGINE %TORQUE
ALT AGL
MODE
DIV SEL
FM
ON
OFF
POLICE SOUND MASTER
14V CONV
GIMBAL CAMERA
SEARCH LT
PA SIREN
MONITOR
DVR
FM
LOJACK

FIGURE AND INDEX NUMBER	PART NUMBER	DESCRIPTION	PARTS AVAIL	QTY PER ASSY
		C813-4 TRANSCEIVER INSTALLATION (G060 CONSOLE)		
90-5B-1	G060-4	Console Assembly (Ref)		
2	5225395-6	Plug	X	A/R
3	—	Cable (Ref; to antenna)		
4	B269-78	Socket Receptacle (15-socket; reference wire -2395[white] and -2395[blue])	X	1
5	B269-77	Plug (15-pin; reference wires -1909 [2, white and blue], -1912 [2, white and blue], -1915 [2, white and blue], and -2394 [2, white and blue])	X	1
6	B269-12	Socket Receptacle (25-socket; reference wires -2778 [2], -2775 [2], 1908 [2, white and blue], -1911 [2, white and blue], and -1914 [2, white and blue])	X	1
7	MS27039C0805	Screw	X	4
8	G682-24	Decal – "FM"	X	1
9	TDFM-9000	Transceiver (FM)	X	1
10	C905-6	Angle	X	2
11	NAS620-5	Washer	X	A/R
12	A130-55	Spacer	X	2
13	A917-8	Strip	X	2
14	MS20470AD3	Rivet	X	6
15	MS21069L08K	Nutplate	X	4
16	NAS1097AD3	Rivet	X	8
17	G064-7	Face (Ref)		
18	MS21042L08	Nut	X	4
19	NAS1149FN816P	Washer	X	4
20	B260-3	Terminal	X	1
21	–2773	Wire (Ref; ground)		
22	B301-8	Nut	X	4
23	A448-10	Bus Bar (4 holes)	X	1
24	C448-2	Block Assembly (Incl items 22, 23, 25, 27, and 28)	X	1
25	C448-5	Block (Ref)		
26	MS35206-228	Screw	X	4
27	B567-43	Screw (install using item 28 under head)	X	4
28	B270-9	Adhesive	X	A/R
29	NAS620-6	Washer	X	2
30	MS21042L06	Nut	X	2
31	B297-10	Circuit Breaker (10 amp; includes items 32, 33, 37, and 38)	X	1

NOTES

Continues

FIGURE AND INDEX NUMBER	PART NUMBER	DESCRIPTION	PARTS AVAIL	QTY PER ASSY
		C813-4 TRANSCEIVER INSTALATION (G060 CONSOLE; Cont'd)		
90-5B-32	–	Lockwasher	O	2
33	–	Screw	O	2
34	A448-12	Bus Bar (12 hole)	X	1
35	B260-2	Terminal	X	1
36	–2772	Wire (Ref; power)		
37	–	Nut	O	1
38	–	Lockwasher	O	1

NOTES

Intentionally Blank

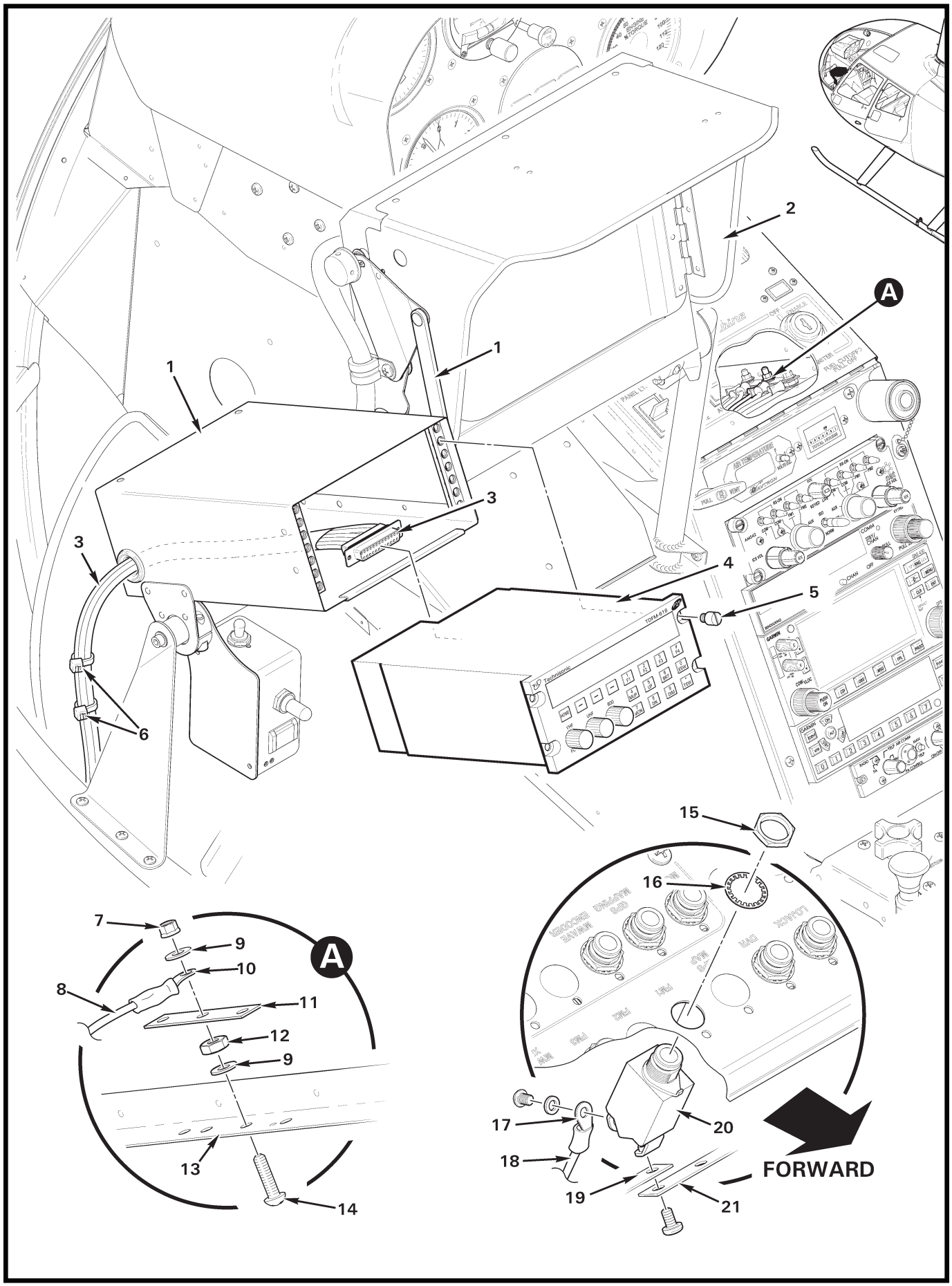
1
1
2
3
3
4
5
6
A
7
8
9
10
11
12
9
13
14
A
15
16
17
18
19
20
21
FORWARD

FIGURE AND INDEX NUMBER	PART NUMBER	DESCRIPTION	PARTS AVAIL	QTY PER ASSY
		C813-2 TRANSCEIVER INSTALLATION		
90-7-1	G413-1	Box Assembly	X	1
2	D763-3	Visor Assembly (Ref, see Figure 90-47)		
3	D613-4	Harness Assembly	X	1
4	TDFM-600	Transceiver – Technisonic	X	1
5	—	Screw	O	4
6	MS3367-5-0	Ty-Rap	X	A/R
7	MS21042L08	Nut	X	1
8	-1898	Wire (Ref)		
9	NAS1149DN832H	Washer	X	2
10	B260-3	Terminal (Ref)		
11	A448-15	Bus Bar (Ref, 3-hole)		
12	B301-8	Nut	X	1
13	F365-1	Angle (Ref)		
14	B567-43	Screw	X	1
15	—	Nut	O	1
16	—	Washer	O	1
17	B260-2	Terminal (Ref)		
18	-1897	Wire (Ref)		
19	A448-13	Bus Bar (Ref)		
20	B297-7	Circuit Breaker (7 amp; includes items 14 and 15)	X	1
21	A448-12	Bus Bar (Ref, 9-hole)		

NOTES

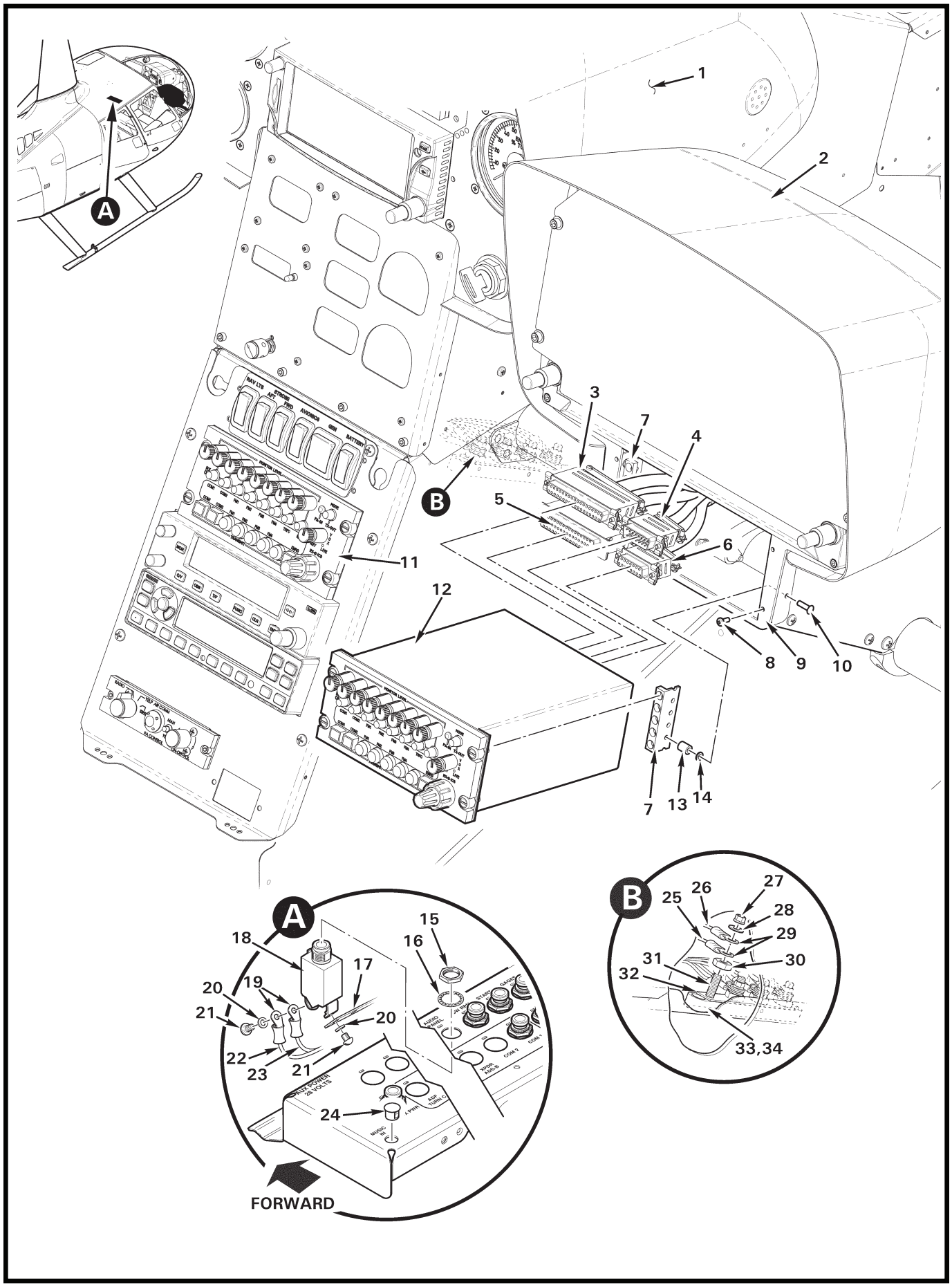

FIGURE 90-7B G460-2 AUDIO CONTROL INSTALLATION

FIGURE AND INDEX NUMBER	PART NUMBER	DESCRIPTION	PARTS AVAIL	QTY PER ASSY
		G460-2 AUDIO CONTROL INSTALLATION		
90-7B-1	G070	Console Assembly (Ref)		
2	G071	Pilot Avionics Console Assembly (Ref)		
3	SD37F00JVLX*	Receptacle (37-socket [at J201])	X	2
	B269-62	Socket	X	29
4	SD15M00JVL2*	Plug (15-pin [at J202])	X	2
	B269-61	Pin	X	A/R
5	SD50F00JVLX*	Receptacle (50-socket [at J101])	X	2
	B269-62	Socket	X	A/R
6	SD15F00WEZ*	Receptacle (50-socket [at J102])	X	2
	B269-62	Socket	X	5
7	A917-6	Strip	X	2
8	MS35206-214	Screw	X	4
9	G413-7	Face Assembly (Ref)		
10	MS20470AD4	Rivet	X	4
11	A711L**	Audio Control Panel (co-pilot module)	X	1
12	A711L**	Audio Control Panel (pilot module)	X	1
13	A130-55	Spacer	X	8
14	NAS620-5	Washer (as required for shimming)	X	A/R
15	—	Nut	O	1
16	—	Lockwasher	O	1
17	A448	Bus Bar (Ref)		
18	B297-3	Circuit Breaker (3-amp; includes items 15, 16, 20, and 21)	X	1
19	B260-2	Terminal	X	2
20	—	Lockwasher	0	2
21	—	Screw	0	2
22	-644	Wire (Ref; power, co-pilot module)		
23	-2745	Wire (Ref; power, pilot module)		
24	2613	Hole Plug (at “MUSIC IN” location)	X	1
25	-643	Wire (Ref; ground, co-pilot module)		
26	-2746	Wire (Ref; ground, pilot module)		
27	MS21042L08	Nut	X	1
28	NAS1149FN816	Washer	X	1
29	B260-3	Terminal	X	2
30	B301-8	Nut	X	4
31	B567-43	Screw	X	4

NOTES * Positronic Industries, Inc. part number.

** Technisonic part number.

Continues

FIGURE AND INDEX NUMBER	PART NUMBER	DESCRIPTION	PARTS AVAIL	QTY PER ASSY
		G460-2 AUDIO CONTROL INSTALLATION (Cont'd)		
90-7B-32	A448-10	Bus Bar (4 hole)	X	1
33	C448-2	Block Assembly (Incl items 30 thru 32 and 34)	X	1
34	C448-5	Block (4 holes)	X	1

NOTES

Intentionally Blank

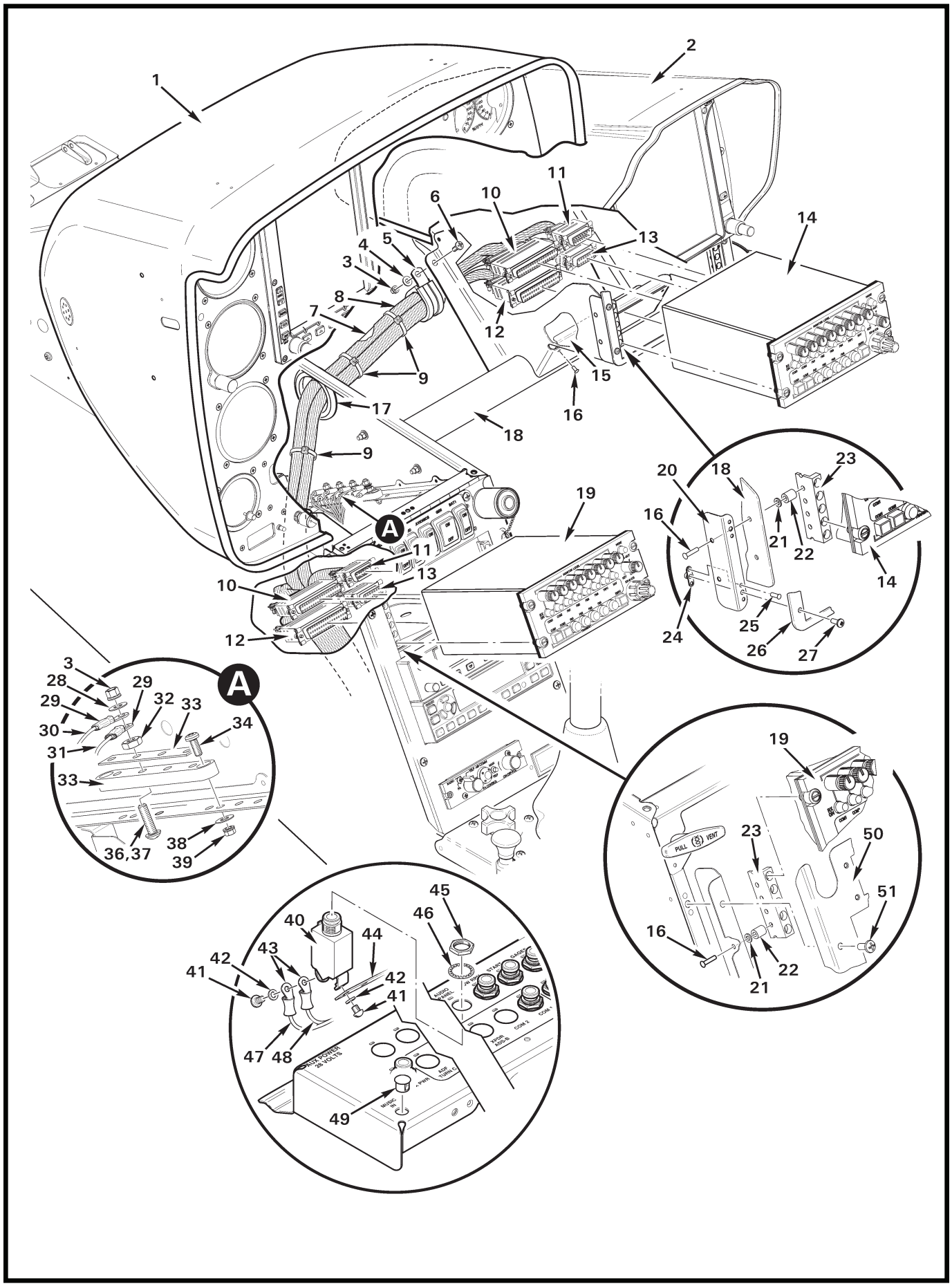

FIGURE 90-9 G460-1 AUDIO CONTROL INSTALLATION

FIGURE AND INDEX NUMBER	PART NUMBER	DESCRIPTION	PARTS AVAIL	QTY PER ASSY
		G460-1 AUDIO CONTROL INSTALLATION		
90-9-1	G060-4	Console Assembly (Ref)		
2	G704-2	Pilot Avionics Console Assembly (Ref)		
3	MS21042L08	Nut	X	2
4	NAS1149FN832P	Washer	X	1
5	MS21919WDG__	Clamp (size as required so that harness has no play in clamp)	X	1
6	MS27039C0806	Screw	X	1
7	—	Wires/Cable to GPS Transceiver (Ref)		
8	B266-8	Sleeving	X	A/R
9	MS3367-5-0	Ty-Rap (or MS3367-7-0)	X	A/R
10	SD37F00JVLX*	Receptacle (37-socket [at J201]; refer to R66 MM chapter 98 for wire assignments)	X	2
	B269-62	Socket	X	29
11	SD15M00JVL2*	Plug (15-pin [at J202]; refer to R66 MM chapter 98 for wire assignments)	X	2
	B269-61	Pin	X	A/R
12	SD50F00JVLX*	Receptacle (50-socket [at J101]; refer to R66 MM chapter 98 for wire assignments)	X	2
	B269-62	Socket	X	A/R
13	SD15F00WEZ*	Receptacle (50-socket [at J102]; refer to R66 MM chapter 98 for wire assignments)	X	2
	B269-62	Socket	X	5
14	A711L**	Audio Control Panel (pilot module)	X	1
15	G704-20	Support	X	1
16	MS20470AD3	Rivet	X	11
17	B401-3	Grommet	X	1
18	G703-13	Support Assembly	X	1
19	A711L**	Audio Control Panel (co-pilot module)	X	1
20	G704-21	Angle Assembly (Incl items 28 and 29)	X	2
21	NAS620-5	Washer (as required for shimming)	X	A/R
22	A130-55	Spacer	X	2
23	A917-6	Strip	X	2
24	MS21069L04	Nutplate	X	2
25	NAS1097AD3	Rivet (countersunk)	X	4
26	G704-18	Face (Ref; for use with Garmin GTN 650 installed)		
	G704-19	Face (Ref ;for use with Garmin GTN 750 installed)		
27	MS35206-214	Screw	X	4

NOTES * Positronic Industries, Inc. part number.

** Technisonic part number.

Continues

FIGURE AND INDEX NUMBER	PART NUMBER	DESCRIPTION	PARTS AVAIL	QTY PER ASSY
		G460-1 AUDIO CONTROL INSTALLATION (Cont'd)		
90-9-28	NAS1149FN816	Washer	X	2
29	B260-3	Terminal	X	2
30	-643	Wire (Ref; ground, co-pilot module)		
31	-2746	Wire (Ref; ground, pilot module)		
32	B301-8	Nut	X	4
33	A448-10	Bus Bar (4 hole)	X	1
34	MS35206-228	Screw	X	2
35	C448-2	Block Assembly (Incl items 30,34, and 35)	X	1
36	B567-43	Screw (install using item 35)	X	4
37	B270-9	Adhesive	X	A/R
38	NAS1149FN616P	Washer	X	2
39	MS21042L06	Nut	X	2
40	B297-3	Circuit Breaker (3-amp; includes items 39, 40, 43, and 44)	X	1
41	—	Screw	0	2
42	—	Lockwasher	0	2
43	B260-2	Terminal	X	2
44	A448	Bus Bar (Ref)		
45	—	Nut	O	1
46	—	Lockwasher	O	1
47	-644	Wire (Ref; power, co-pilot module)		
48	-2745	Wire (Ref; power, pilot module)		
49	2613	Hole Plug	X	1
50	F640	Face Assembly (Ref; avionics)		
51	MS27039C0807	Screw (Ref)		

NOTES

Intentionally Blank

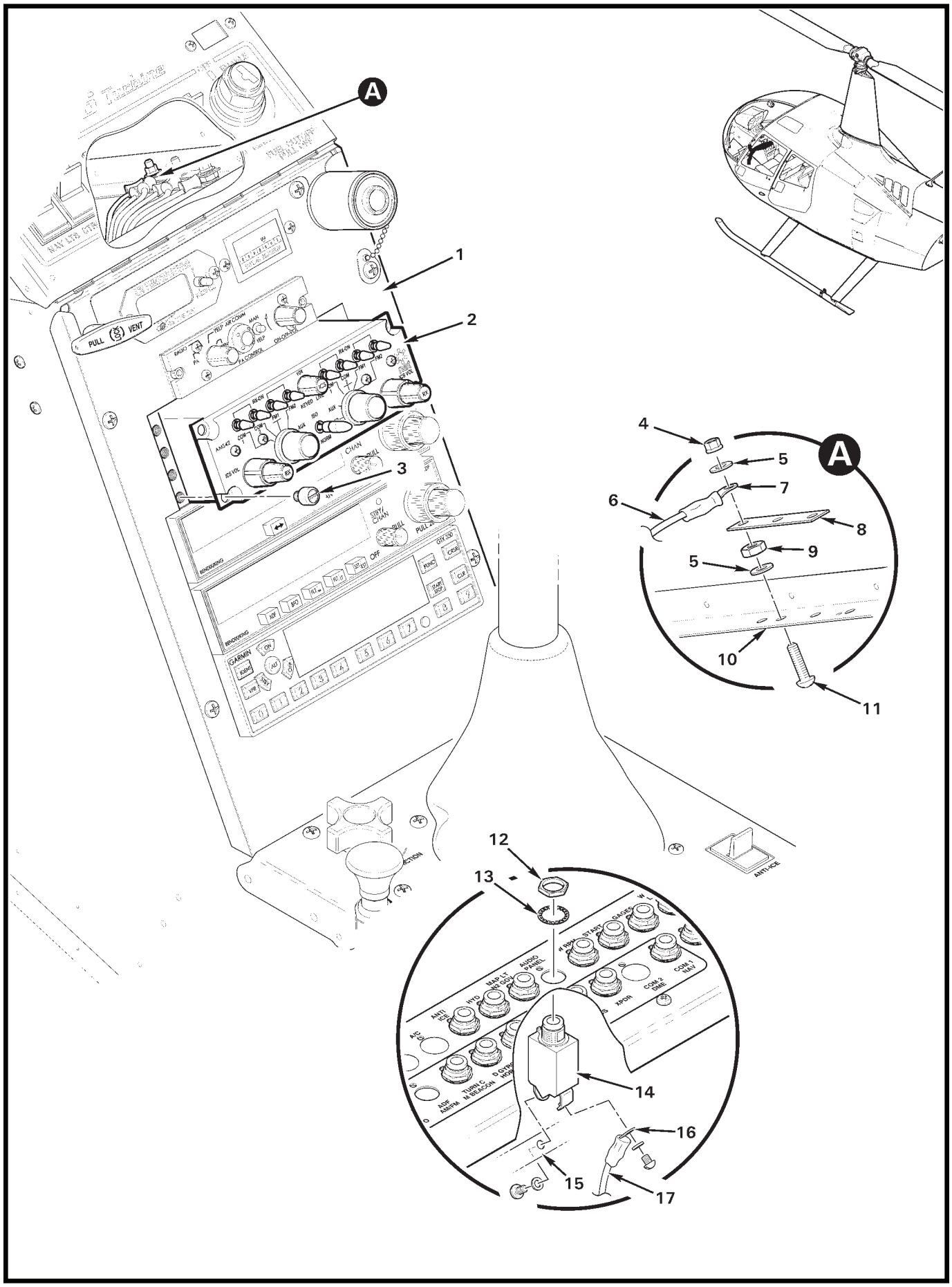

FIGURE 90-13 C823-16 DUAL AUDIO CONTROL INSTALLATION

FIGURE AND INDEX NUMBER	PART NUMBER	DESCRIPTION	PARTS AVAIL	QTY PER ASSY
		C823-16 DUAL AUDIO CONTROL INSTALLATION		
90-13-1	G225	Face Assembly (Ref)		
2	AMS42	Dual Audio Control (N.A.T.)	X	1
3	MS24693-S32	Screw	X	3
4	MS21042L08	Nut	X	1
5	NAS1149DN832H	Washer	X	2
6	-951	Wire (Ref)		
7	B260-3	Terminal (Ref)		
8	A448-15	Bus Bar (3-hole)	X	1
9	B301-8	Nut	X	1
10	F365-1	Angle (Ref)		
11	B567-43	Screw	X	1
12	—	Nut	O	1
13	—	Lockwasher	O	1
14	B297-2	Circuit Breaker (2 amp; includes items 12 and 13)	X	1
15	A448-1	Bus Bar (Ref)		
16	B260-3	Terminal (Ref)		
17	-950	Wire (Ref)		

NOTES

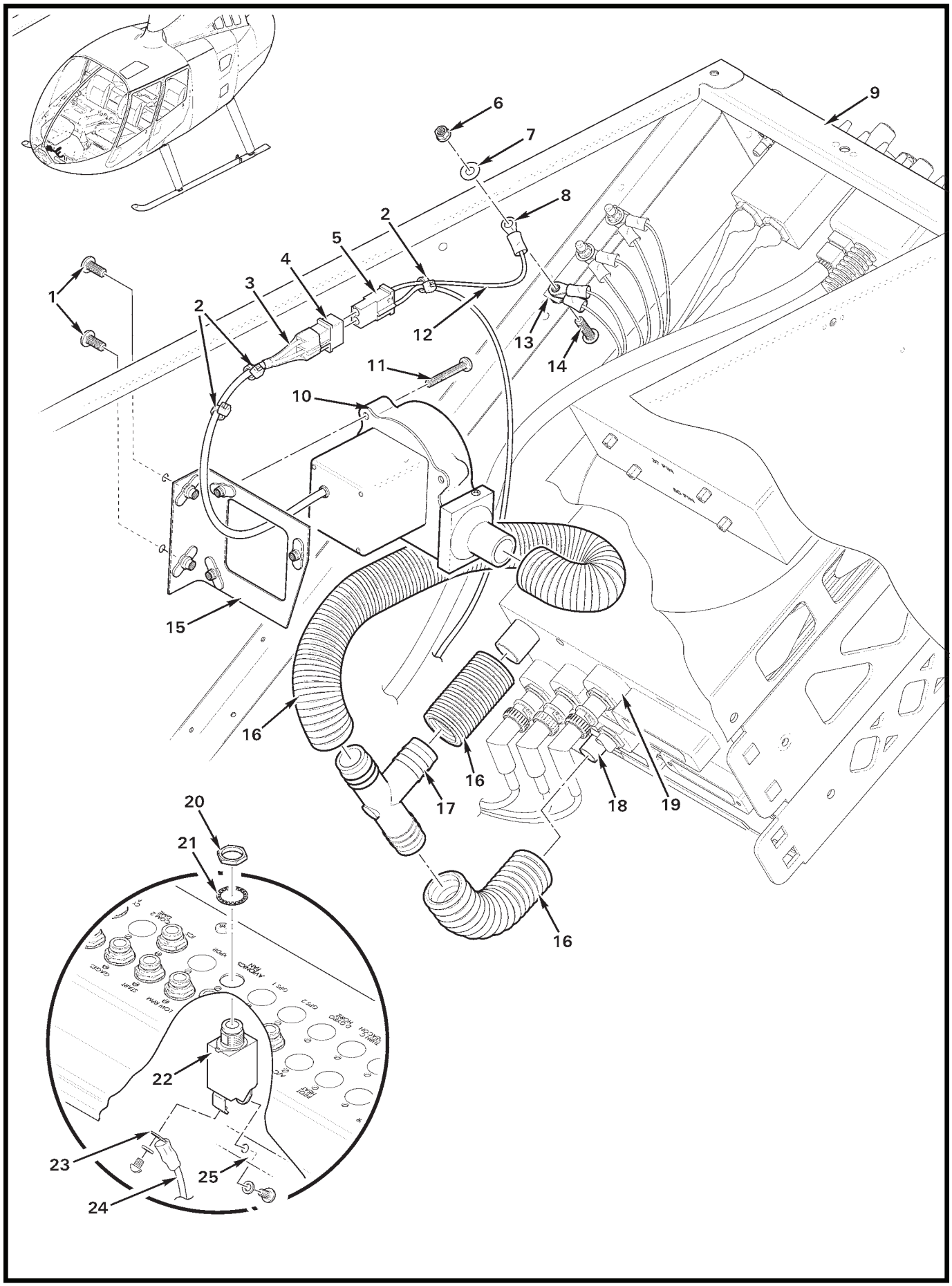

FIGURE 90-15 C849-4 BLOWER INSTALLATION

FIGURE AND INDEX NUMBER	PART NUMBER	DESCRIPTION	PARTS AVAIL	QTY PER ASSY
		C849-4 BLOWER INSTALLATION		
90-15-1	MS270390806	Screw	X	2
2	MS3367-4-9	Ty-Rap	X	A/R
3	B158-408	Heat Shrink	X	A/R
4	B263-12	Housing	X	1
	B263-1	Pin	X	2
5	B263-13	Housing	X	1
	B263-2	Socket	X	2
6	MS21042L08	Nut (Ref)		
7	NAS1149FN816P	Washer (Ref)		
8	B260-3	Terminal	X	1
9	F033	Lower Console Assembly (Ref)		
10	TB1-1.5D	Blower	X	1
11	MS35206-233	Screw	X	3
12	-1147	Wire (Ref)		
13	A448-4	Bus Bar (Ref; 3-hole)		
14	B567-43	Screw (Ref)		
15	D651-1	Bracket	X	1
16	5399K17	Hose	X	A/R
17	A457-5	Tee	X	1
18	GTX 330	Transponder – Garmin (Ref)		
19	GNS 430W	Transceiver – Garmin (Ref)		
20	—	Nut	O	1
21	—	Washer	O	1
22	B294-2	Circuit Breaker (2 amp; includes items 20 and 21)	X	1
23	B260-2	Terminal (Ref)		
24	-1014	Wire (Ref)		
25	A448-1	Bus Bar (Ref)		

NOTES

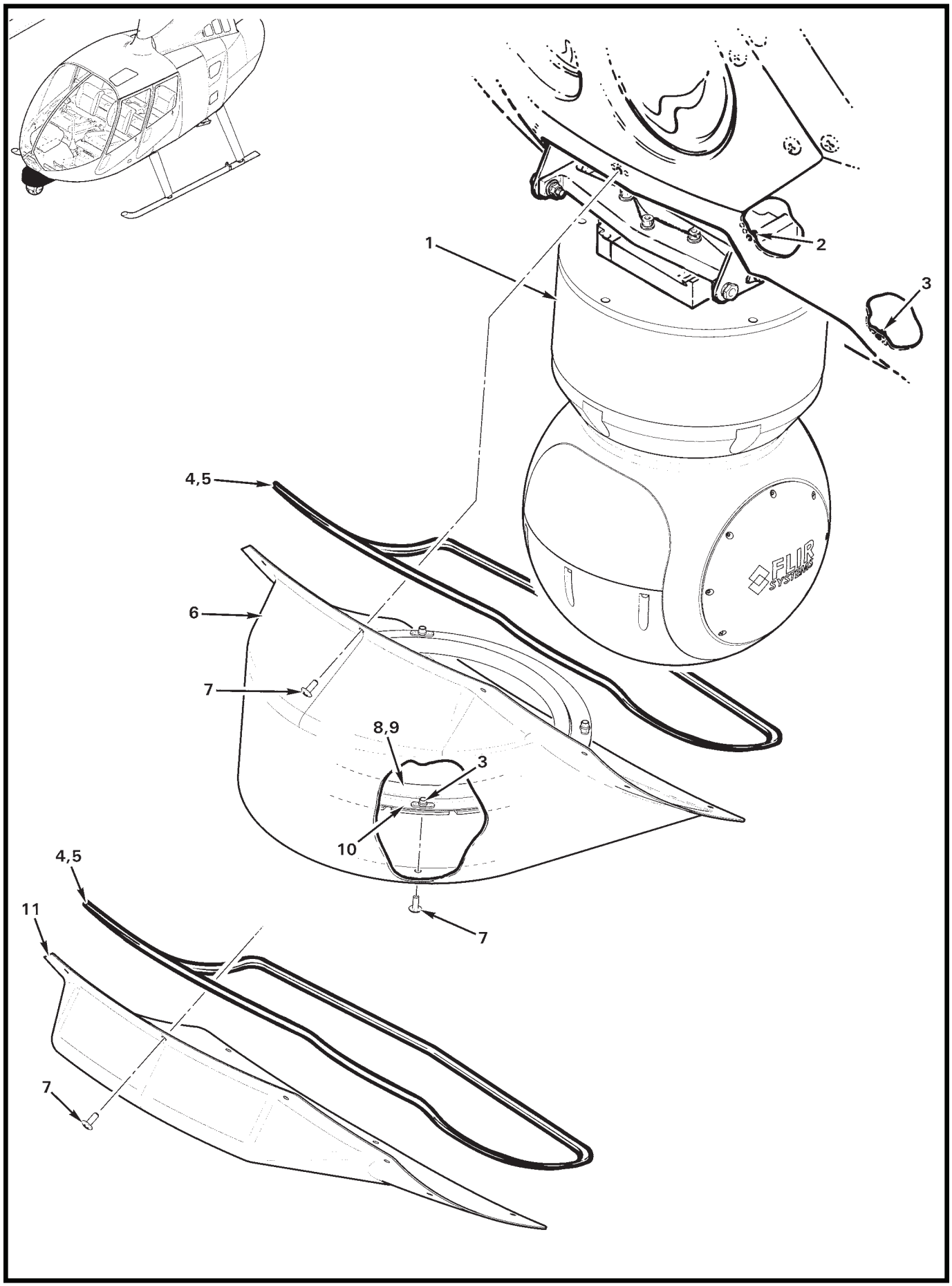

FIGURE 90-17 F051-1 CAMERA SYSTEM INSTALLATION – GIMBAL FAIRING AND COVER

FIGURE AND INDEX NUMBER	PART NUMBER	DESCRIPTION	PARTS AVAIL	QTY PER ASSY
		F051-1 CAMERA SYSTEM INSTALLATION – GIMBAL FAIRING AND COVER		
90-17-1	19205-201	Gimbal Assembly (Ref; Model # Flir Systems, see Figure 90-19)		
2	MS21071L08	Nutplate (Ref)	X	2
3	MS21069L08	Nutplate ([10] on helicopter chin, [4] on item 11)	X	A/R
4	A226-3	Seal (install using item 5)	X	A/R
5	B270-8	Sealant (silicone)	X	A/R
6	G412-1	Fairing	X	1
7	B332-42	Screw	X	12
8	05-00020	Seal (install using item 9)	X	A/R
9	B270-18	Adhesive	X	A/R
10	D350-6	Ring Assembly (includes item 3 [4])	X	1
11	G548-1596	Cover (for use when item 1 is removed)	X	1

NOTES

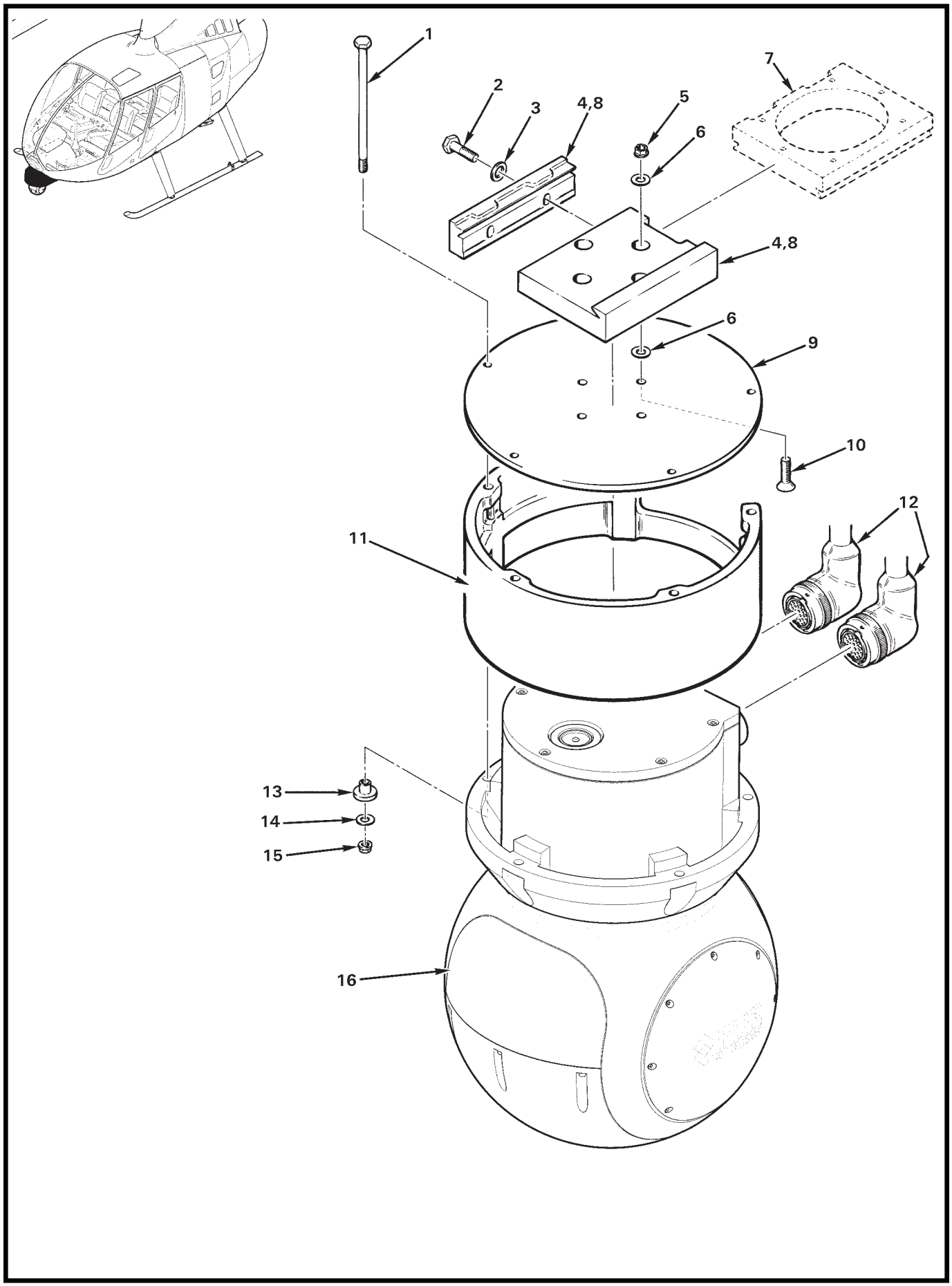

FIGURE 90-19 F051-1 CAMERA SYSTEM INSTALLATION – GIMBAL AND LOWER SUPPORT ASSEMBLY

FIGURE AND INDEX NUMBER	PART NUMBER	DESCRIPTION	PARTS AVAIL	QTY PER ASSY
		F051-1 CAMERA SYSTEM INSTALLATION – GIMBAL AND LOWER SUPPORT ASSEMBLY		
90-19-1	AN3-040A	Bolt	O	5
2	—	Bolt	O	2
3	—	Washer	O	2
4	IR-4100-1*	Adapter Assembly	O	1
5	MS21042L4	Nut	X	4
6	NAS1149D0463P	Washer	O	8
7	D400-2	Block (Ref)		
8	IR-410*	Adapter Assembly – Gimbal Installation (Incl items 1 thru 6, 9 thru 11, and 13 thru 15)	X	1
9	IR-610-1*	Mount Plate	O	1
10	MS24693S297	Screw	O	4
11	IR-630-1*	Spacer	O	1
12	10349-104-1-C1**	Cable Pair (Ref)		
13	IR-620-1*	Bushing	O	5
14	NAS1149D0363J	Washer	O	5
15	MS21042L3	Nut	X	5
16	19205-201	Gimbal (Model U8000/U8500; Flir Systems, N. Billerica, MA)	X	1

NOTES * Paravion Tech, Inc. part no.
** Inframetrics part no.

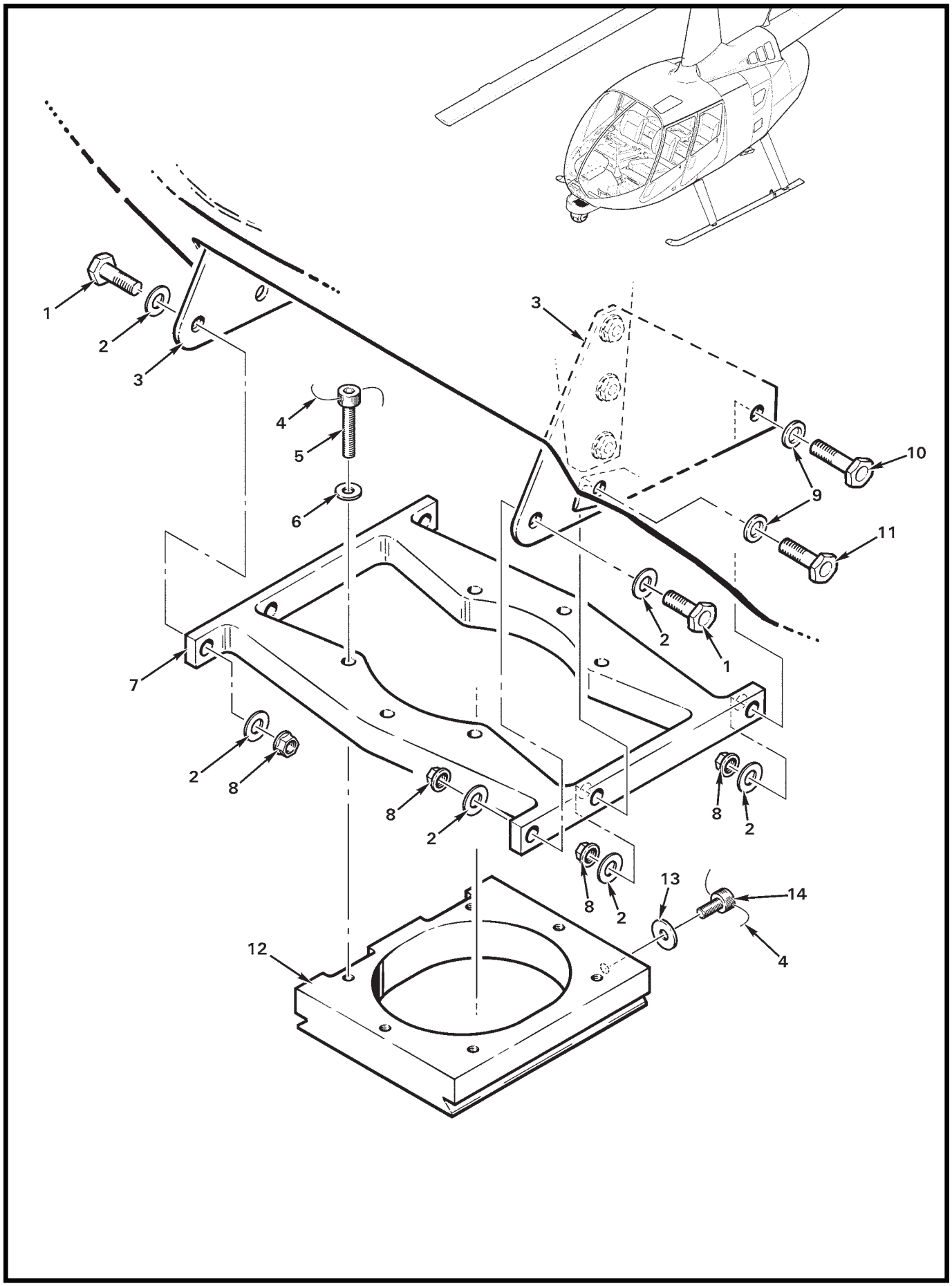

FIGURE 90-21 F051-1 CAMERA SYSTEM INSTALLATION – UPPER GIMBAL SUPPORT ASSEMBLY

FIGURE AND INDEX NUMBER	PART NUMBER	DESCRIPTION	PARTS AVAIL	QTY PER ASSY
		F051-1 CAMERA SYSTEM INSTALLATION – UPPER GIMBAL SUPPORT ASSEMBLY		
90-21-1	NAS6604-4	Bolt	X	2
2	NAS1149F0432P	Washer	X	8
3	D349-1	Support (Ref)		
4	MS20995C32	0.032 in. dia Safety Wire	X	A/R
5	NAS1352-3-16P	Screw	X	6
6	NAS1149F0332P	Washer	X	6
7	D349-3	Plate	X	1
8	MS21042L4	Nut	X	6
9	A141-11	Washer	X	4
10	NAS6604-7	Bolt	X	2
11	NAS6604-5	Bolt	X	2
12	D400-2	Block Assembly	X	1
13	A141-18	Washer	X	1
14	NAS1352-3-8P	Screw	X	1

NOTES

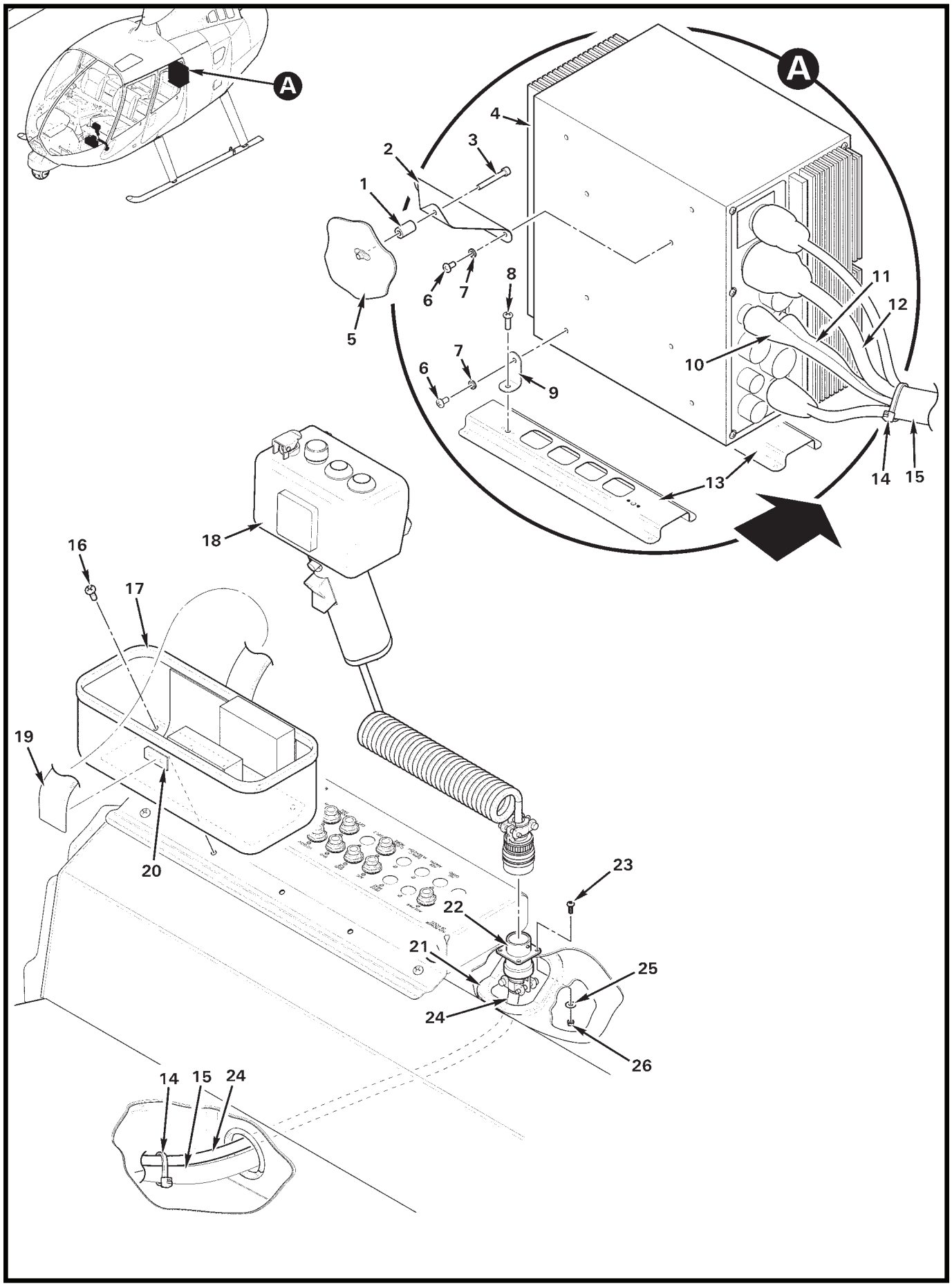

FIGURE 90-23 F051-1 CAMERA SYSTEM INSTALLATION – ELECTRONICS CONTROL UNIT & CONTROLLER ASSEMBLY

FIGURE AND INDEX NUMBER	PART NUMBER	DESCRIPTION	PARTS AVAIL	QTY PER ASSY
		F051-1 CAMERA SYSTEM INSTALLATION – ELECTRONICS CONTROL UNIT & CONTROLLER ASSEMBLY		
90-23-1	A130-50	Spacer	O	1
2	G429-10	Support	X	1
3	NAS1352-08-16P	Screw	X	1
4	19206-2*	Flir Electronics Control Unit	O	1
5	F233-1	Firewall (Ref)		
6	MS27039C0805	Screw	X	4
7	B332-42	Lockwasher	X	4
8	MS27039C0806	Screw	X	2
9	D428-16	Bracket	X	2
10	G548-937	Cable (Ref)		
11	G548-1596	Cable (Ref)		
12	3202312KHA200	Cable (Ref)		
13	G429-1	Support Assembly	X	2
14	MS3367-5-0	Ty-Rap	X	A/R
15	G548-1	Wire Harness (Ref)		
16	MS27039C0807	Screw	X	3
17	D417-5	Box Installation	X	1
18	D616-1	Controller Assembly	X	1
19	B219-4	Strap Assembly (Ref)		
20	A913-2	Strip (Ref)		
21	A226-15	Trim	X	A/R
22	MS3120E12-105	Receptacle (Ref)		
23	MS35206-214	Screw	X	4
24	G548-8106	Cable (Ref)		
25	NAS1149FN416P	Washer	X	4
26	MS21042L04	Nut	X	4

NOTES * FLIR Part Number.

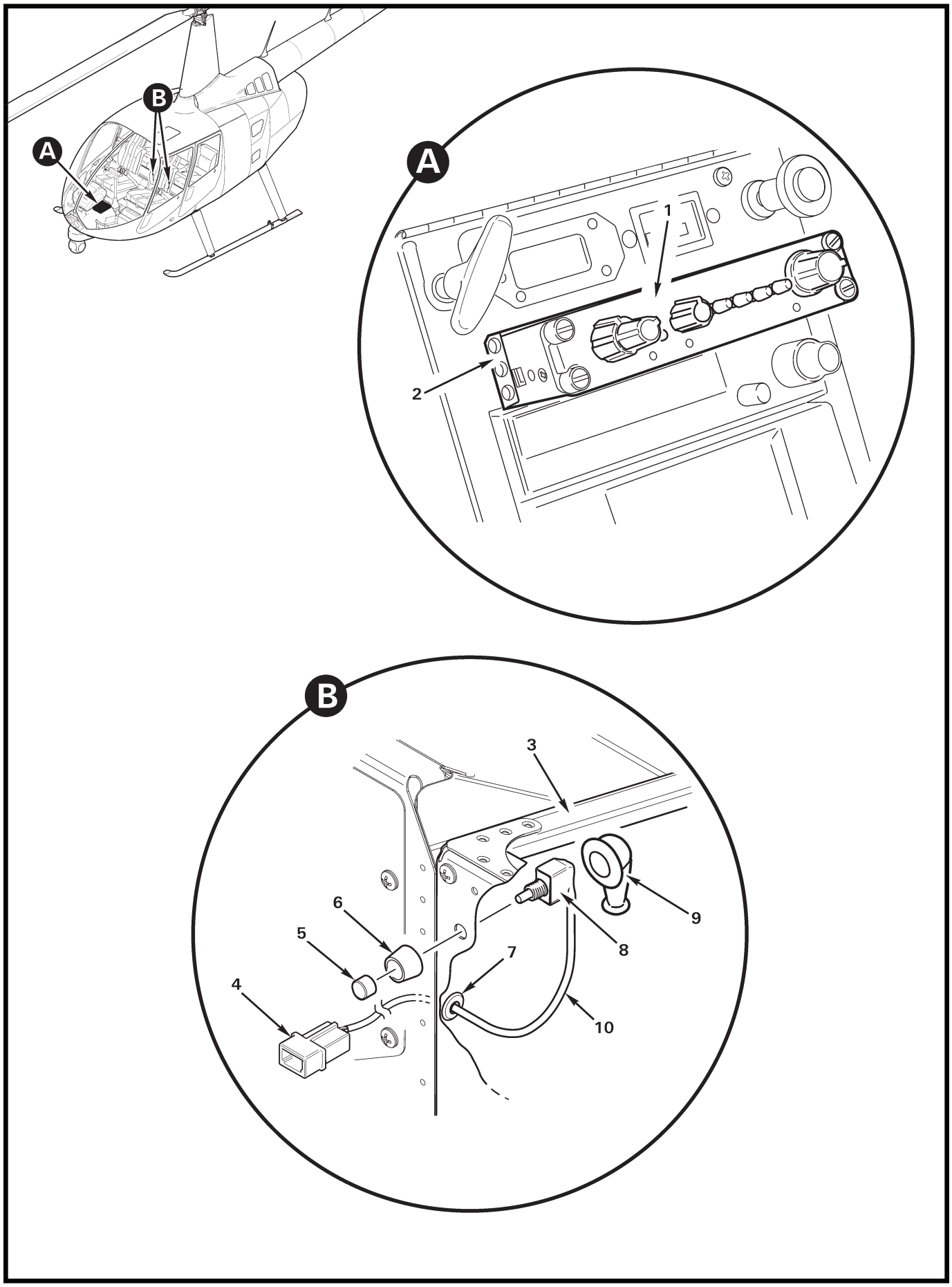

FIGURE 90-25 F060-2 INTERCOM SYSTEM INSTALLATION – AUDIO CONTROL

FIGURE AND INDEX NUMBER	PART NUMBER	DESCRIPTION	PARTS AVAIL	QTY PER ASSY
		F060-2 INTERCOM SYSTEM INSTALLATION – AUDIO CONTROL		
90-25-1	AA12S-600	Audio Control	X	1
2	A917-2	Strip	X	2
3	F291-3	Support Assembly – Aft (Ref; LH)		
4	B263-12	Housing	X	1
	B263-1	Pin	X	1
5	—	Cap	O	1
6	—	Nut	O	1
7	MS35489-4	Grommet	X	1
8	C049-10	Harness Assembly – LH (Incl items 5 thru 8)	X	1
	C049-13	Harness Assembly – RH (Incl items 5 thru 8)	X	1
9	MS25171-1S	Nipple	X	1
10	B158-2	Heat Shrink	X	A/R

NOTES

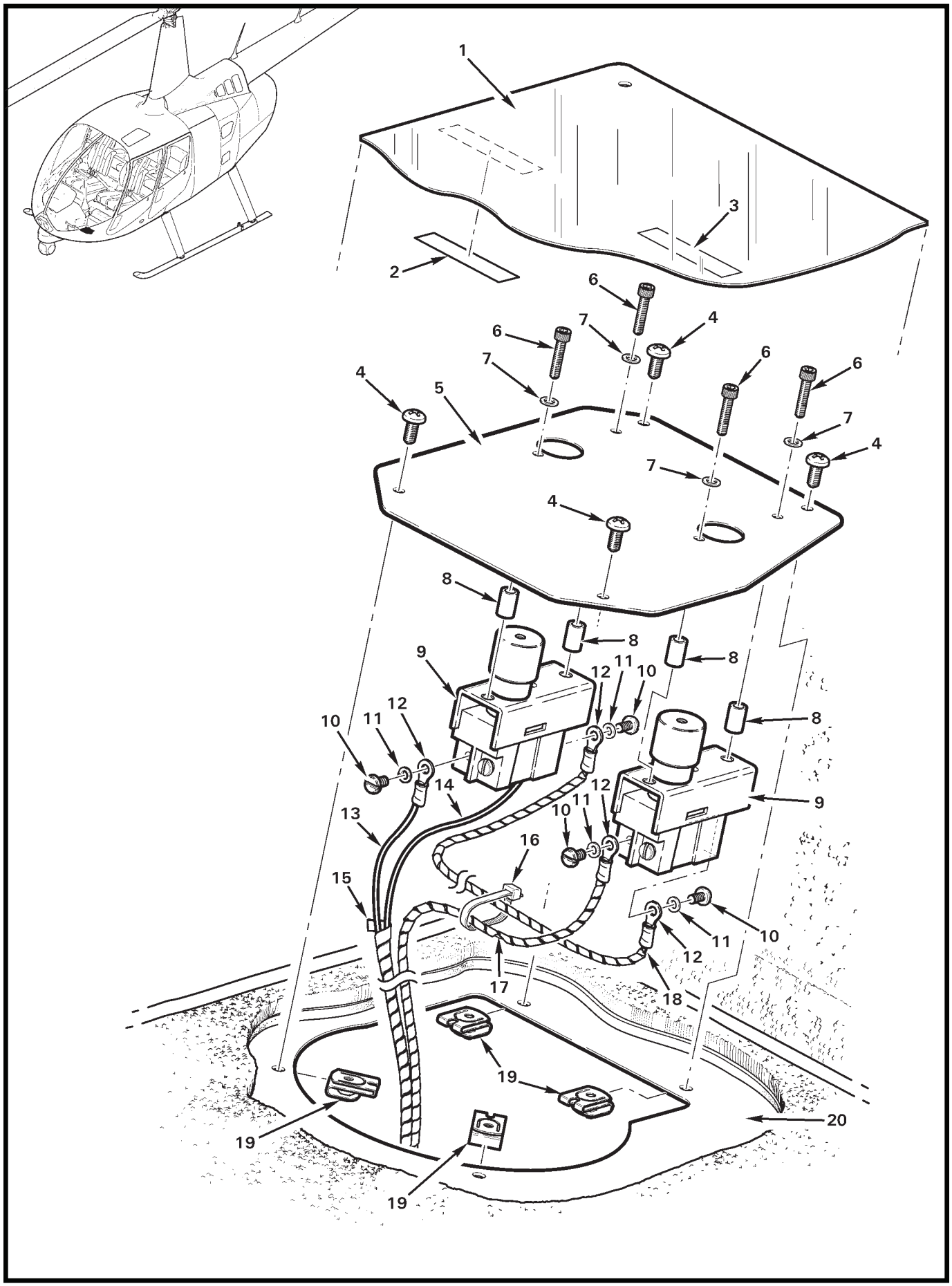

FIGURE 90-27 F060-2 INTERCOM SYSTEM INSTALLATION – FLOOR SWITCHES

FIGURE AND INDEX NUMBER	PART NUMBER	DESCRIPTION	PARTS AVAIL	QTY PER ASSY
		F060-2 INTERCOM SYSTEM INSTALLATION – FLOOR SWITCHES		
90-27-1	G469-1	Scuff Plate (Ref; LH)		
2	C654-30	Decal – "Intercom"	X	1
3	C654-31	Decal – "Transmit"	X	1
4	MS27039C0806	Screw	X	4
5	C797-1	Cover	X	1
6	NAS1351-06-12P	Screw	X	4
7	NAS620-6	Washer	X	4
8	A130-34	Spacer	X	4
9	A565-2	Switch – Foot (Incl items 10 and 11)	X	2
10	—	Screw	O	3
11	—	Lockwasher	O	3
12	B260-2	Terminal	X	5
13	F059-283	Wire (Ref)		
14	F059-284	Wire (Ref)		
15	B161-2	Spirap	X	A/R
16	MS3367-5-9	Ty-Rap	X	A/R
17	F060-686	Wire (Ref)		
18	F060-687	Wire (Ref)		
19	B162-3	Clipnut	X	4
20	F232-1	Panel – Floor (Ref; LH)		

NOTES

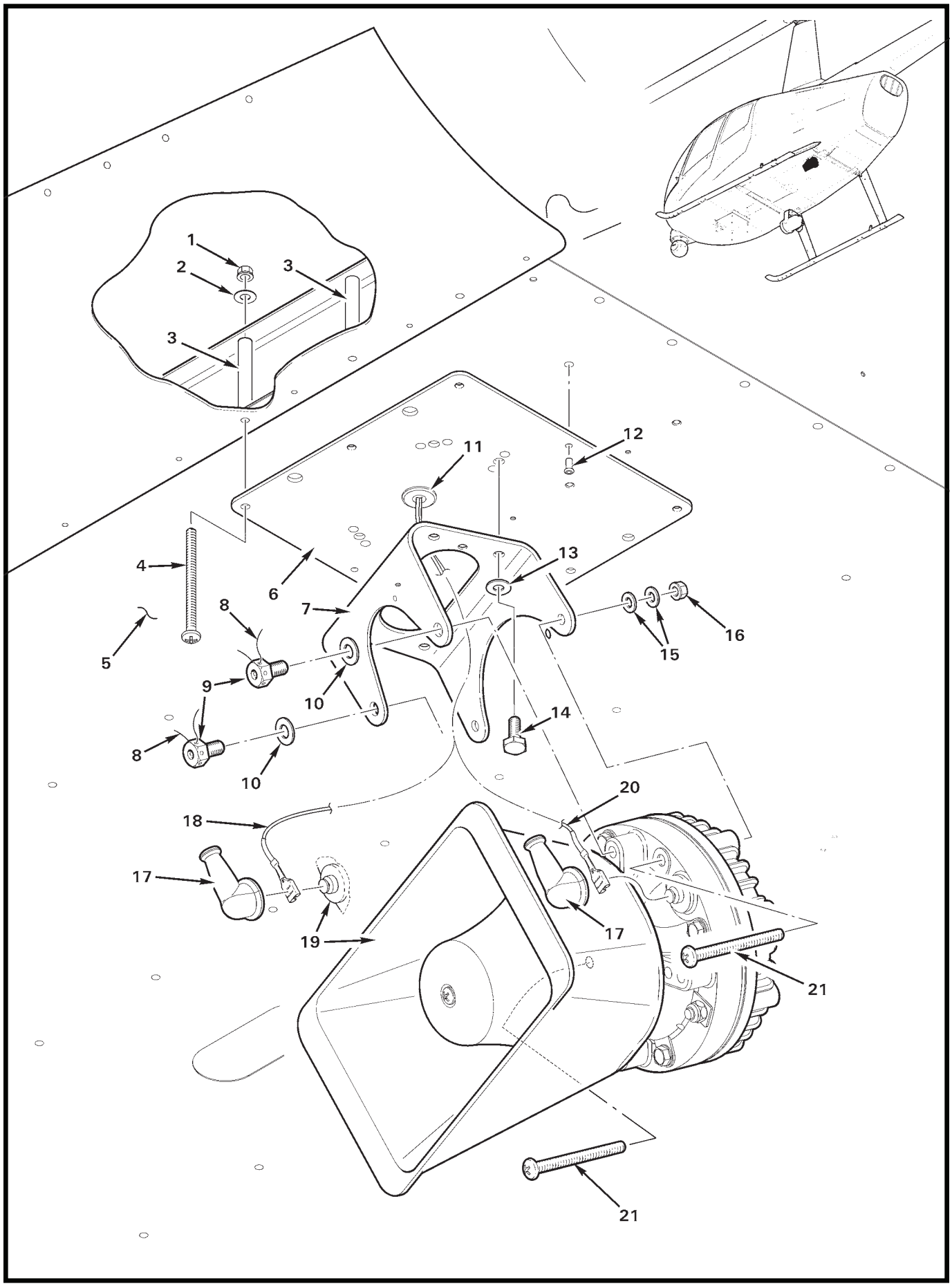
1
2
3
3
11
12
4
6
13
7
8
16
5
15
9
10
14
8
10
20
18
17
17
19
21
21

FIGURE AND INDEX NUMBER	PART NUMBER	DESCRIPTION	PARTS AVAIL	QTY PER ASSY
		PA/SIREN SPEAKER INSTALLATION		
90-29-1	MS21042L08	Nut	X	6
2	NAS1149FN816P	Washer	X	6
3	C130-55	Spacer	X	6
4	MS27039C0835	Screw (outboard)	X	3
	MS27039C0834	Screw (inboard, not shown)	X	3
5	G917-1	Belly (Ref)		
6	F644-3	Plate Assembly	X	1
7	F644-1	Bracket	X	1
8	MS20995C32	0.032 in. dia Safety Wire	X	A/R
9	MS27004-04-03	Bolt	X	2
10	NAS1149F0432P	Washer	X	2
11	MS35489-35	Grommet	X	1
12	NAS9301B-4-02	Rivet	X	2
13	NAS1149F0332P	Washer	X	4
14	NAS6603-3	Bolt	X	4
15	NAS620-10L	Washer	X	4
16	MS21042L3	Nut	X	2
17	MS25171-1S	Nipple	X	2
18	—	Wire (white, no. 2344; Ref)		
19	SA340-TS	Speaker	X	1
20	—	Wire (black, no. 2345; Ref)		
21	NAS603-34P	Screw	X	2

NOTES

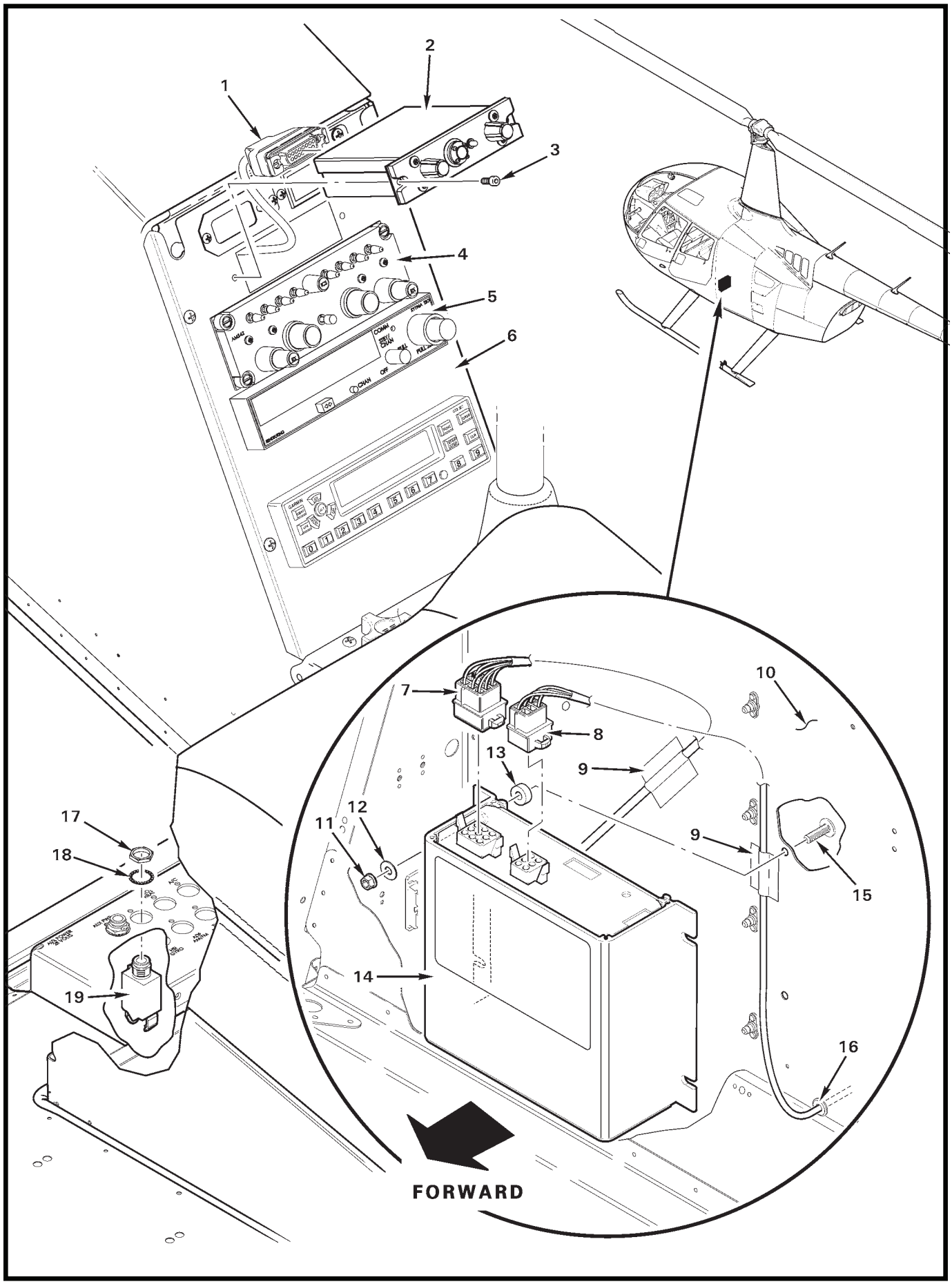
1
2
3
4
5
6
7
8
9
9
10
11
12
13
14
15
16
17
18
19
FORWARD

FIGURE AND INDEX NUMBER	PART NUMBER	DESCRIPTION	PARTS AVAIL	QTY PER ASSY
		PA/SIREN SYSTEM COMPONENTS		
90-31-1	—	Connector (Ref)		
2	A687-2	PA/Siren Control	X	1
3	NAS1352-06-6	Screw	X	2
4	AMS42	Audio Control (dual; Ref)		
5	KY197	Com Transceiver (Bendix/King, Ref)		
6	G225	Face Assembly – Avionics (Ref)		
7	B263-20	Housing	X	1
	B263-1	Pin	X	6
8	B263-18	Housing	X	1
	B263-1	Pin	X	4
9	A701-1	Foil Tape	X	A/R
10	G259-1	Panel (Bulkhead; Ref)		
11	MS21042L08	Nut	X	3
12	NAS1149FN832P	Washer	X	3
13	A130-37	Spacer	X	3
14	BETA 124R	Amplifier	X	1
15	AN525-832R9	Screw	X	3
16	MS35489-5	Grommet	X	1
17	—	Nut	O	1
18	—	Lockwasher	O	1
19	B297-7	Circuit Breaker (7.5 amp; includes items 17 and 18)	X	1

NOTES

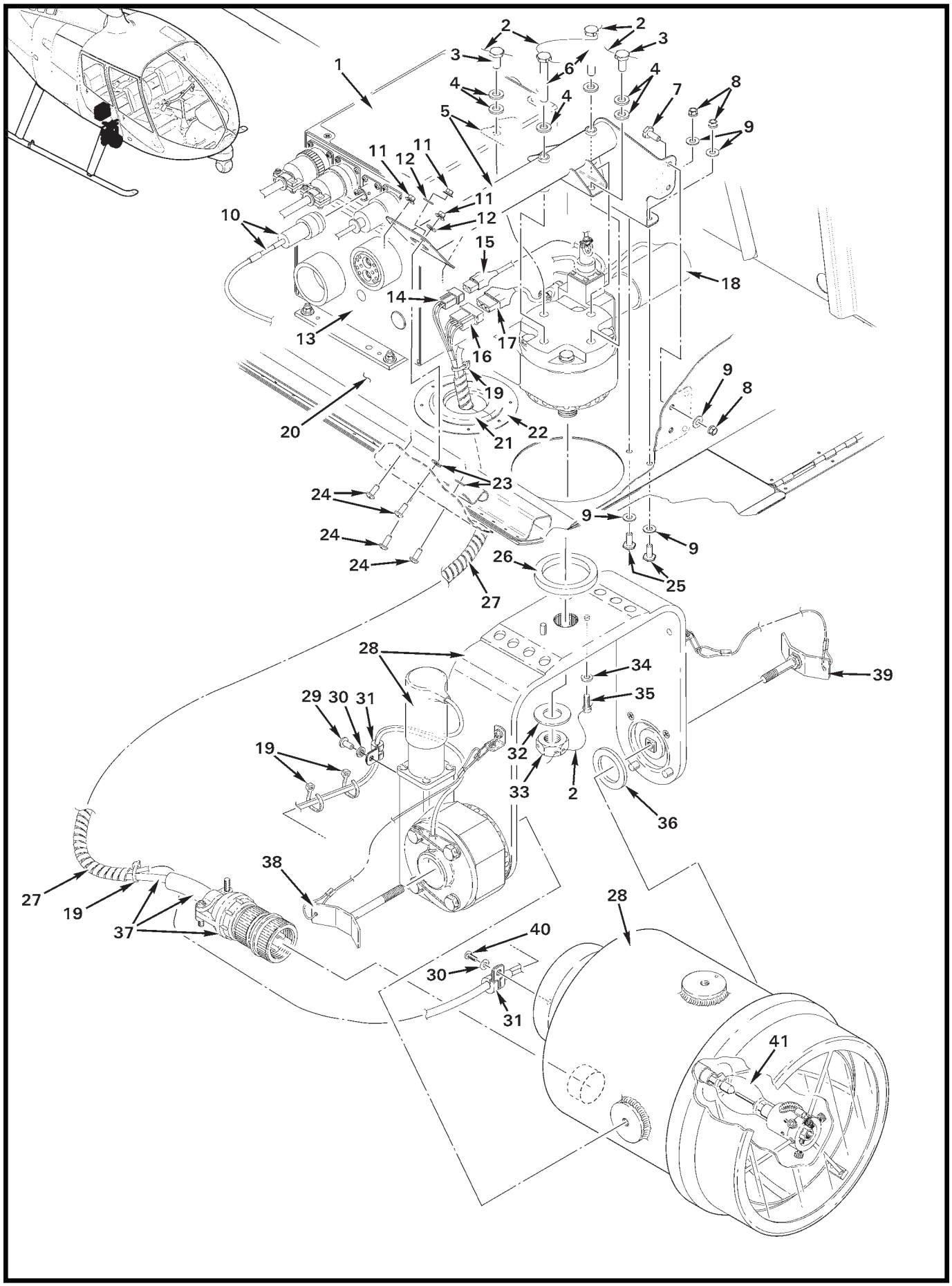

FIGURE 90-33 F081 SEARCHLIGHT INSTALLATION – GIMBAL AND GEARMOTOR ASSEMBLIES

FIGURE AND INDEX NUMBER	PART NUMBER	DESCRIPTION	PARTS AVAIL	QTY PER ASSY
		F081 SEARCHLIGHT INSTALLATION – GIMBAL AND GEARMOTOR ASSEMBLIES		
90-33-1	U8-7102C	Slass ECU (Ref)		
2	MS20995C32	0.032 in. dia Safety Wire	X	A/R
3	NAS6604H2	Bolt	X	2
4	NAS1149F0463P	Washer	X	6
5	D401-7	Support Weldment	X	1
6	NAS6604H21	Bolt	X	2
7	NAS6603-2	Bolt	X	2
8	MS21042L3	Nut	X	4
9	NAS1149F0332P	Washer	X	6
10	D599-4	Harness Assembly (Ref)		
11	MS21042L08	Nut	X	4
12	NAS1149FN816P	Washer	X	2
13	032347	Junction Box (Ref)		
14	B263-32	Housing	X	1
	B263-1	Pin	X	2
15	B263-33	Housing	X	1
	B263-2	Socket	X	2
	B158-8	Heat Shrink	X	A/R
16	B263-34	Housing	X	1
	B263-1	Pin	X	3
17	B263-35	Housing	X	1
	B263-2	Socket	X	3
	B158-12	Heat Shrink	X	A/R
18	D432-2	Gearmotor (Incl items 15 and 17)	X	1
19	MS3367-4-9	Ty-Rap	X	4
20	D015-3	Skin (Ref)		
21	D402-1	Grommet	X	1
22	D564-1	Doubler (Ref)		
23	NAS1149FN832P	Washer (forward screws)	X	2
24	MS27039C0806	Screw	X	4
25	B238-1	Bolt	X	2
26	D405-4	Washer (0.25-inch felt, adhesive backed)	X	1
27	B161-8	Spirap	X	A/R
28	D432-1	Gimbal Assembly (slaved; includes items 14, 16, 19,26, 29 thru 31, 36, 40, and 41)	O	1

NOTES

Continues

FIGURE AND INDEX NUMBER	PART NUMBER	DESCRIPTION	PARTS AVAIL	QTY PER ASSY
		F081 SEARCHLIGHT INSTALLATION – GIMBAL AND GEARMOTOR ASSEMBLIES (Cont'd)		
90-33-29	MS27039C1-06	Screw	X	1
30	B332-43	Lockwasher	X	1
31	MS21919WDG3	Clamp	X	2
32	MS15795-820	Washer	O	1
33	NAS509-10	Nut	O	1
34	—	Washer	O	1
35	MS51960-65	Screw	O	1
36	D405-6	Washer (0.12-inch felt, adhesive backed)	X	1
37	032435-210-36-14	Harness Assembly (Ref)		
38	017821-105	Wingbolt Assembly (long)	O	1
39	017821-101	Wingbolt Assembly (short)	O	1
40	MS35206-328	Screw	X	1
41	030060-1	Lamp (xenon, 500-watt)	X	1

NOTES

Intentionally Blank

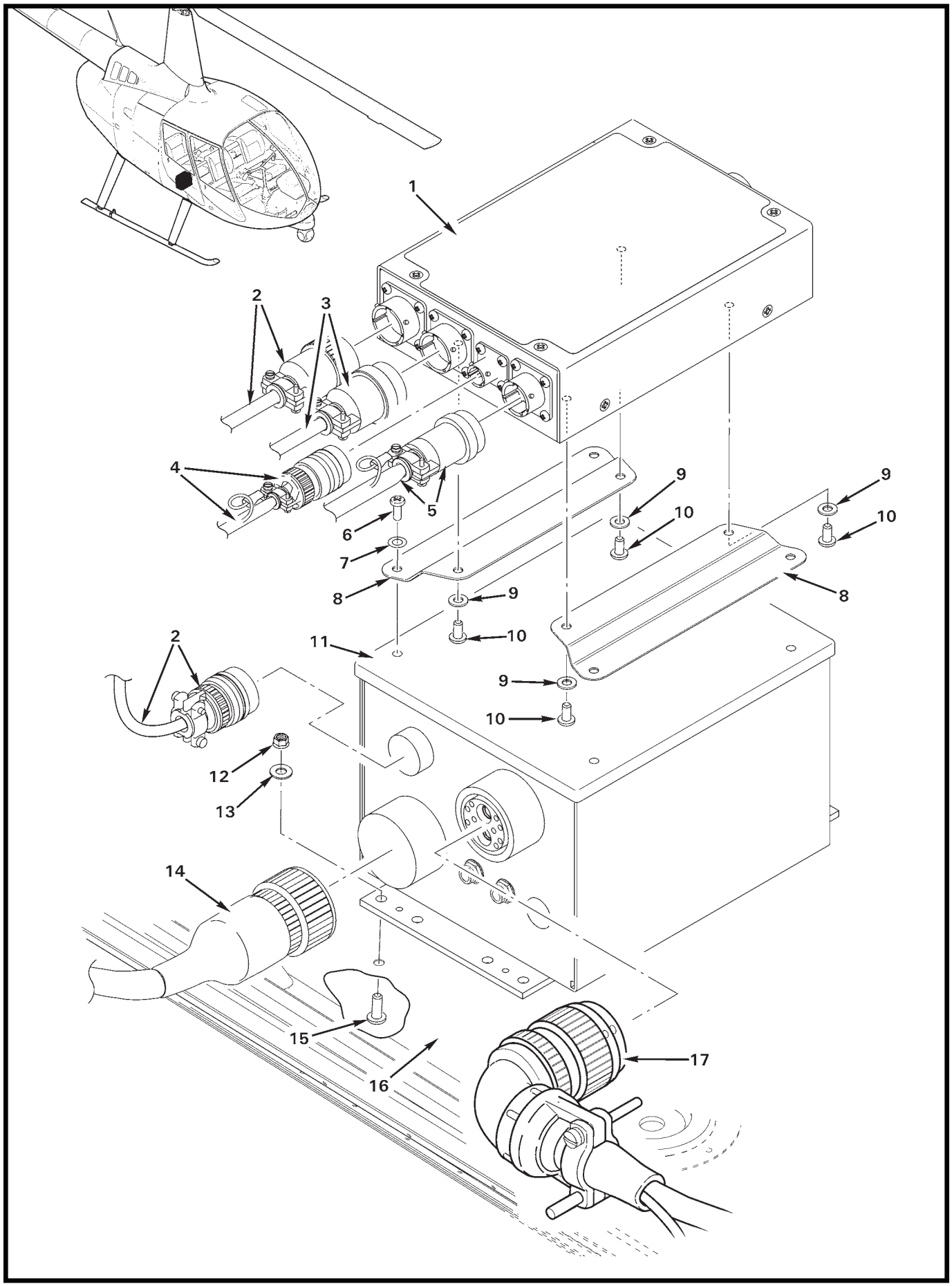

FIGURE 90-37 F081 SEARCHLIGHT INSTALLATION – SLASS ECU AND JUNCTION BOX ASSEMBLY

FIGURE AND INDEX NUMBER	PART NUMBER	DESCRIPTION	PARTS AVAIL	QTY PER ASSY
		F081 SEARCHLIGHT INSTALLATION – SLASS ECU AND JUNCTION BOX ASSEMBLY		
90-37-1	U8-7102C	Slass ECU	X	1
2	D599-15	Harness Assembly (Ref, to item 11)	X	1
3	D599-13	Harness Assembly (Ref, to D426-3 Control)	X	1
4	D599-4	Harness Assembly (Ref, to AZ/ELEV Control)	X	1
5	D599-12	Harness Assembly (Ref, to FLIR)	X	1
6	—	Screw (included with item 11)	O	4
7	—	Washer (included with item 11)	O	4
8	G429-9	Support	X	2
9	NAS1149FN832P	Washer	X	4
10	MS27039C0805	Screw	X	4
11	032347	Junction Box Assembly (Ref)		
12	MS21042L3	Nut	X	4
13	NAS1149F0332P	Washer	X	4
14	—	Harness Assembly (Ref, to forward junction box assembly)		
15	MS27039C1-08	Screw	X	4
16	F015-3	Panel (Ref)		
17	032435-201-36-14	Harness Assembly (Ref, to searchlight gimbal)		

NOTES

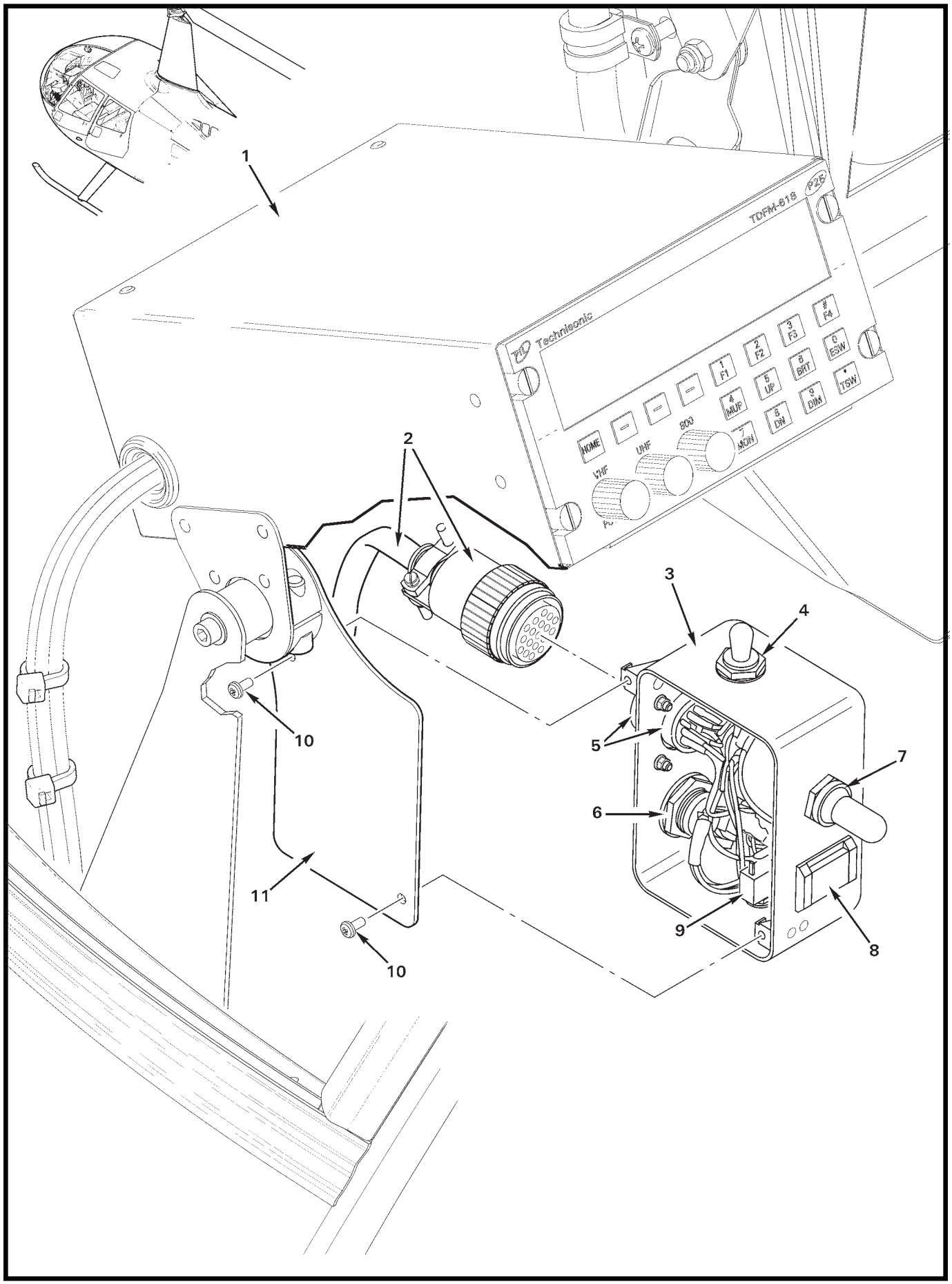

FIGURE 90-39 F081 SEARCHLIGHT INSTALLATION – CONTROL ASSEMBLY

FIGURE AND INDEX NUMBER	PART NUMBER	DESCRIPTION	PARTS AVAIL	QTY PER ASSY
		F081 SEARCHLIGHT INSTALLATION – CONTROL ASSEMBLY		
90-39-1	—	Transceiver (Ref)		
2	D599-13	Harness Assembly (Ref)		
3	D426-5	Control Assembly – Searchlight (Incl items 4 thru 9)	X	1
4	M-2027BB1W01-RA	Switch (on-off / start)	X	1
	B158-1	Heat Shrink	X	A/R
5	MS3112E14-9	Receptacle	X	1
	B158-1	Heat Shrink	X	A/R
6	PB-346112E	Switch (focus)	X	1
7	91MOT-B-E	Switch (joystick)	X	1
8	UB-15NBKW01E-JE	Switch (slave)	X	1
	B158-1	Heat Shrink	X	A/R
9	MB-2411S1W01-FB	Switch (calibrate)	X	1
	B158-1	Heat Shrink	X	A/R
	AT512CH	Conical Nut (not shown)	X	1
10	MS35206-227	Screw	X	2
11	D410-9	Support (Ref)		

NOTES

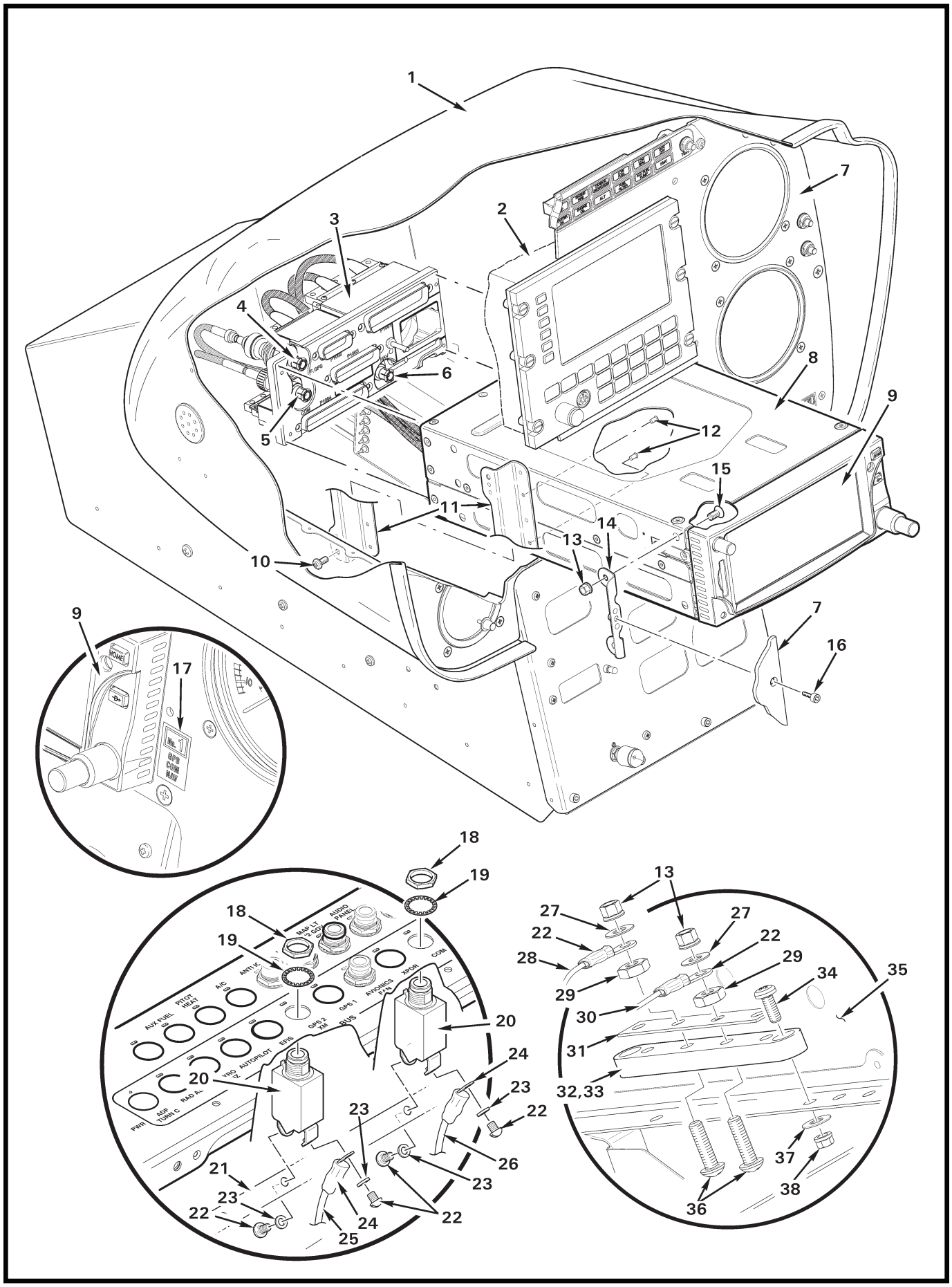

FIGURE 90-39B F818 GTN 6XX-SERIES GPS/NAV/COM INSTALLATION (G070 CONSOLE)

FIGURE AND INDEX NUMBER	PART NUMBER	DESCRIPTION	PARTS AVAIL	QTY PER ASSY
		F818 GTN 6XX-SERIES GPS/NAV/COM INSTALLATION (G070 CONSOLE)		
90-39B-1	G070	Console Assembly (Ref)		
2	TDFM-9000	Transceiver (FM, Ref)		
3	011-02325-0X*	Connector Kit (P1001 thru P1004, Ref)		
4	330-00053-02*	Connector (GPS, BNC/TNC; Ref)		
5	330-00053-01*	Connector (COM, BNC; Ref)		
6	330-00053-01*	Connector (NAV, BNC; Ref)		
7	G075	Face (Ref)		
8	115-01293-00*	Mounting Rack (Ref)		
9	GTN 650Xi*	Transceiver (GPS/COM/NAV)	X	1
10	MS35206-227	Screw	X	5
11	A356-10	Stiffener Assembly	X	2
12	NAS1097AD3	Rivet	X	4
13	MS21042L08	Nut	X	6
14	A356-9	Angle Assembly	X	2
15	MS24694-S2	Screw	X	4
16	NAS1352-06-6	Screw	X	2
17	F654-39	Decal – “No. 1/2/3, GPS COM NAV”	X	1
18	—	Nut	O	1
19	—	Lockwasher	O	1
20	B297-5	Circuit Breaker (5 amp; includes items 18, 19, 22, and 23)	X	2
21	A448	Bus Bar (Ref)		
22	—	Screw	O	1
23	—	Lockwasher	O	1
24	B260-3	Terminal	X	2
25	–466	Wire (Ref, GPS 1)		
	–1426	Wire (Ref, GPS 2)		
26	–200	Wire (Ref, COM 1)		
	–703	Wire (Ref, COM 2)		
27	NAS1149FN816P	Washer	X	2
28	–465	Wire (Ref, GPS 1)		
	–1427	Wire (Ref, GPS 2)		
29	B301-8	Nut	X	2
30	–201	Wire (Ref, COM 1)		
	–704	Wire (Ref, COM 2)		
31	A448-10	Bus Bar (4 holes)	X	1

NOTES * Garmin part no.

Continues

FIGURE AND INDEX NUMBER	PART NUMBER	DESCRIPTION	PARTS AVAIL	QTY PER ASSY
		F818 GTN 6XX-SERIES GPS/NAV/COM INSTALLATION (G070 CONSOLE) (Cont'd)		
90-39B-32	C448-2	Terminal Block Assembly (Incl items 29, 31, 33, and 35)	X	1
33	C448-5	Block (4 holes)	X	1
34	MS35206-228	Screw	X	2
35	F033-1	Console Assembly – Lower (Ref)		
36	B567-43	Screw	X	2
37	NAS1149FN616P	Washer	X	2
38	MS21042L06	Nut	X	2

NOTES

Intentionally Blank

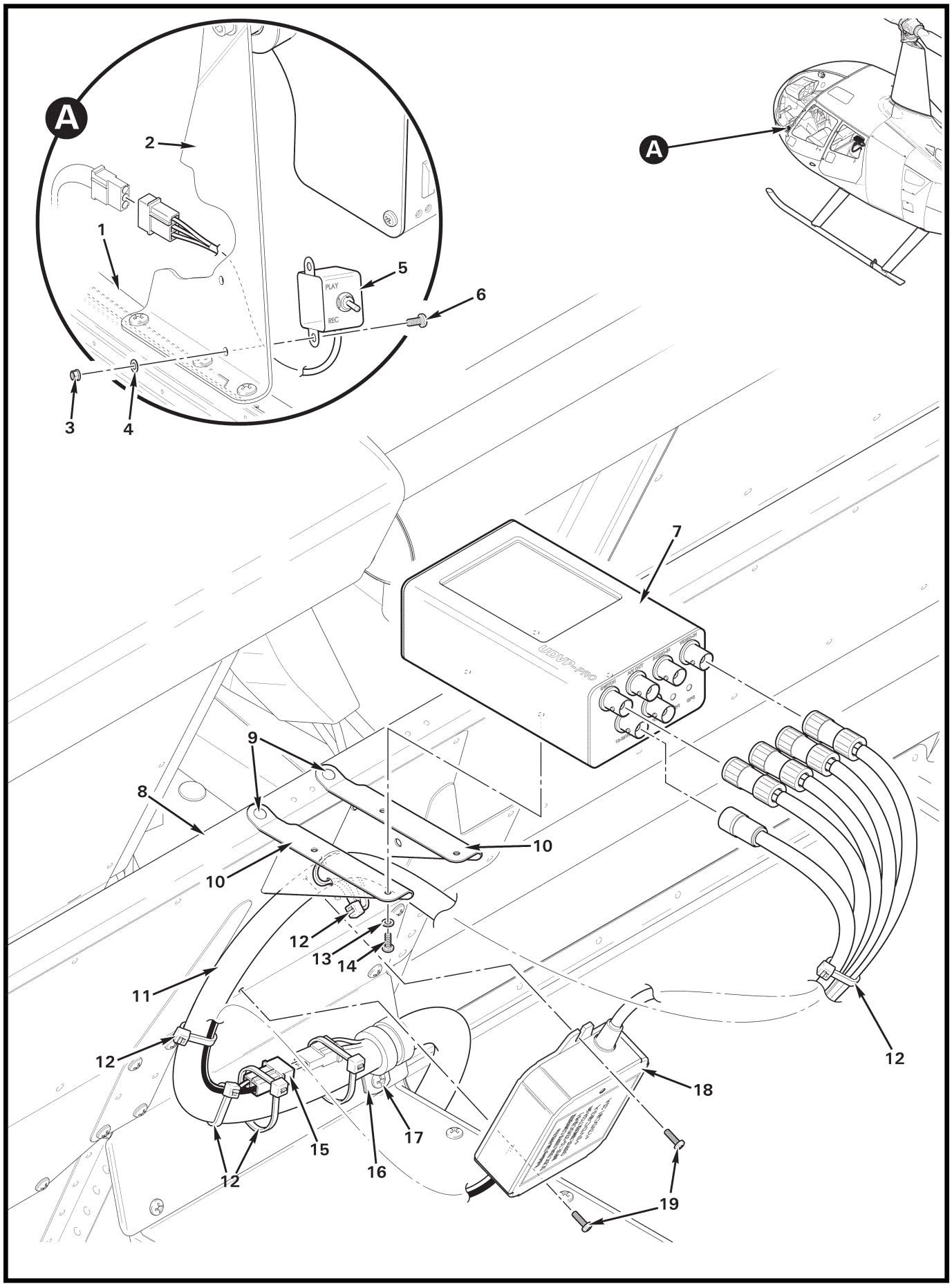

FIGURE 90-41 G415-1 DVR INSTALLATION (OPTIONAL)

FIGURE AND INDEX NUMBER	PART NUMBER	DESCRIPTION	PARTS AVAIL	QTY PER ASSY
		G415-1 DVR INSTALLATION (OPTIONAL)		
90-41-1	F090-1	Frame (Ref)		
2	D407-17	Brace (Ref)		
3	MS21042L06	Nut	X	2
4	NAS620-6L	Washer	X	2
5	D565-12	Switch Assembly	X	1
6	MS35206-227	Screw	X	2
7	UDVP-PRO	DVR (Datatoys)	X	1
8	F383-4	Channel (Ref)		
9	MS20470AD4	Rivet	X	4
10	D856-5	Bracket	X	2
11	G458-1	Harness Assembly (Ref)		
12	MS3367-5-0	Ty-rap	X	A/R
13	B332-40	Washer	X	4
14	MS35206-214	Screw	X	4
15	B263-32	Housing	X	1
	B263-1	Pin	X	2
16	MS21919WDG*	Clamp	X	1
17	MS27039C0807	Screw	X	1
18	XM-DVR-PRO	Converter	X	1
19	MS35206-215	Screw	X	2

NOTES

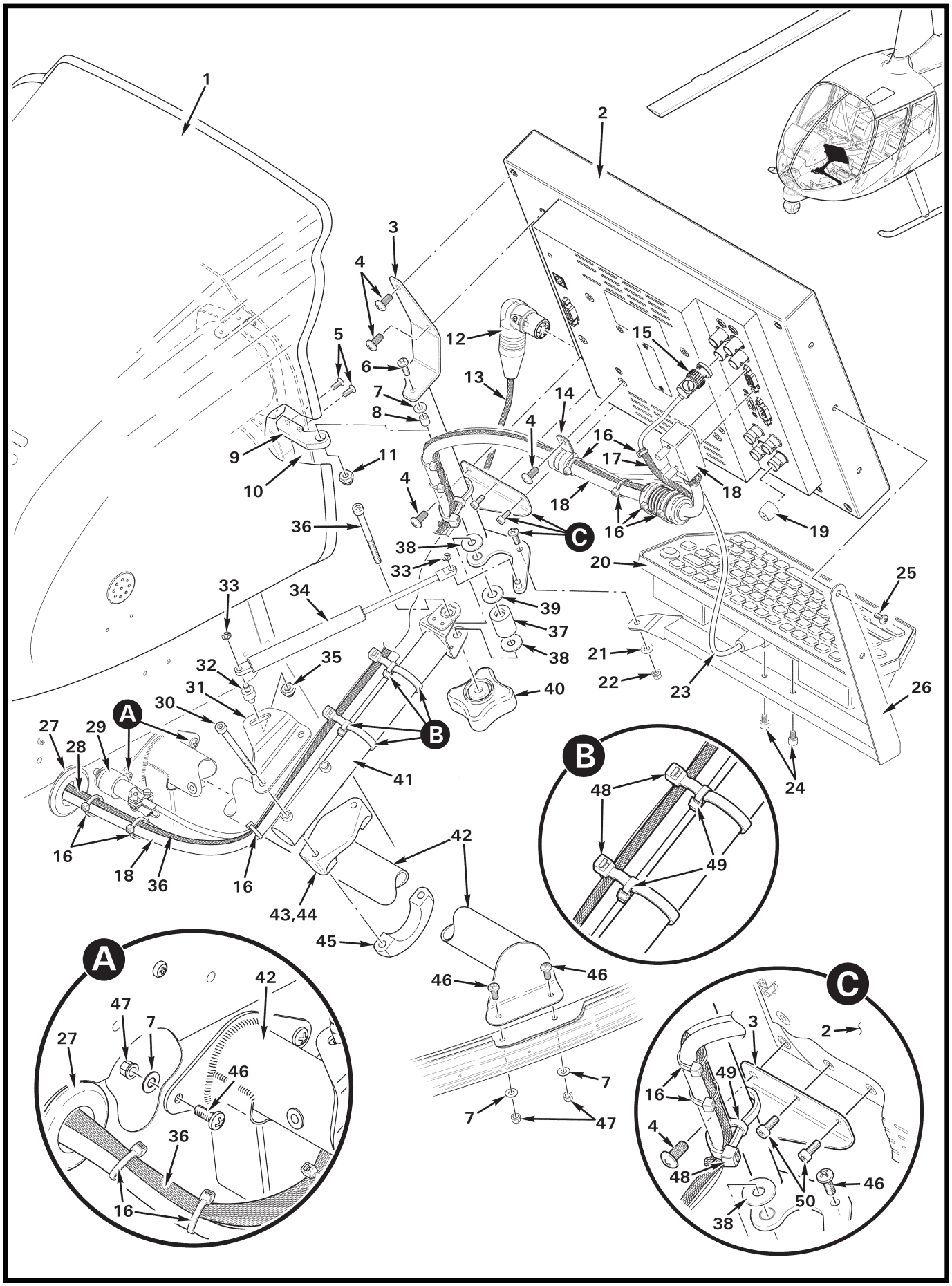

FIGURE 90-43 G416-5 MONITOR INSTALLATION

FIGURE AND INDEX NUMBER	PART NUMBER	DESCRIPTION	PARTS AVAIL	QTY PER ASSY
		G416-5 MONITOR INSTALLATION		
90-43-1	G070	Console Assembly (Ref)		
2	BHB12HDR15*	Monitor	X	1
3	G417-5	Pivot Assembly	X	1
4	MS27039C1-06	Screw	X	4
5	MS35206-228	Screw	X	2
6	MS27039C0808	Screw	X	1
7	NAS1149FN816P	Washer	X	5
8	A105-5	Journal	X	1
9	G418-26	Block Assembly	X	1
10	G075	Face (Ref)		
11	B340-4	Nut	X	1
12	NC4FRX	Plug	X	1
13	B266-4	Sleeving	X	A/R
14	MS21919WDG6	Clamp	X	1
15	112588	Plug	X	1
	B158-3	Heat Shrink	X	A/R
	G458-937	Wire (video 1, Ref)		
16	MS3367-4-0	Ty-Rap	X	A/R
17	B226-8	Sleeving	X	A/R
18	P502-006-RA	Cable	X	1
19	—	Cap (Ref)		
20	D210-6	Keyboard Assembly	X	1
21	NAS1149FN816P	Washer	X	A/R
22	B340-4	Dress Nut	X	1
23	—	Cord (Ref)		
24	NAS1352-08-4P	Screw	X	2
25	MS27039C1-06	Screw	X	2
26	G417-7	Tray Weldment	X	2
27	MS35489-22	Grommet	X	1
28	B266-12	Sleeving	X	A/R
29	MS3116F8-4P	Plug (Ref)		
30	91251A355	Screw	X	2
31	G418-25	Support	X	1
32	G418-3	Stud	X	1
33	MS16633-2015	Ring	X	2

NOTES * Boland part number.

Continues

FIGURE AND INDEX NUMBER	PART NUMBER	DESCRIPTION	PARTS AVAIL	QTY PER ASSY
		G416-5 MONITOR INSTALLATION (Cont'd)		
90-43-34	9417K4	Gas Spring (McMaster-Carr part number, 20 lb)	X	1
35	B340-8	Nut	X	1
36	MS20074-04-13	Bolt	X	1
37	G418-17	Tube	X	1
38	A141-7	Washer	X	2
39	A141-45	Washer	X	1
40	2454K28	Knob (hand tight)	X	1
41	G418-6	Support Assembly	X	1
42	G705-9	Support Assembly	X	1
43	B630-1	Clamp Assembly (Incl items 44 and 45)	X	1
44	B630-3	Clamp	X	1
45	B630-2	Clamp Assembly	X	1
46	MS27039C0806	Screw	X	4
47	MS21042L08	Nut	X	4
48	MS3367-7-0	Ty-Rap	X	2
49	MS3367-5-0	Ty-Rap	X	2
50	91290A111	Screw	X	2

NOTES

Intentionally Blank

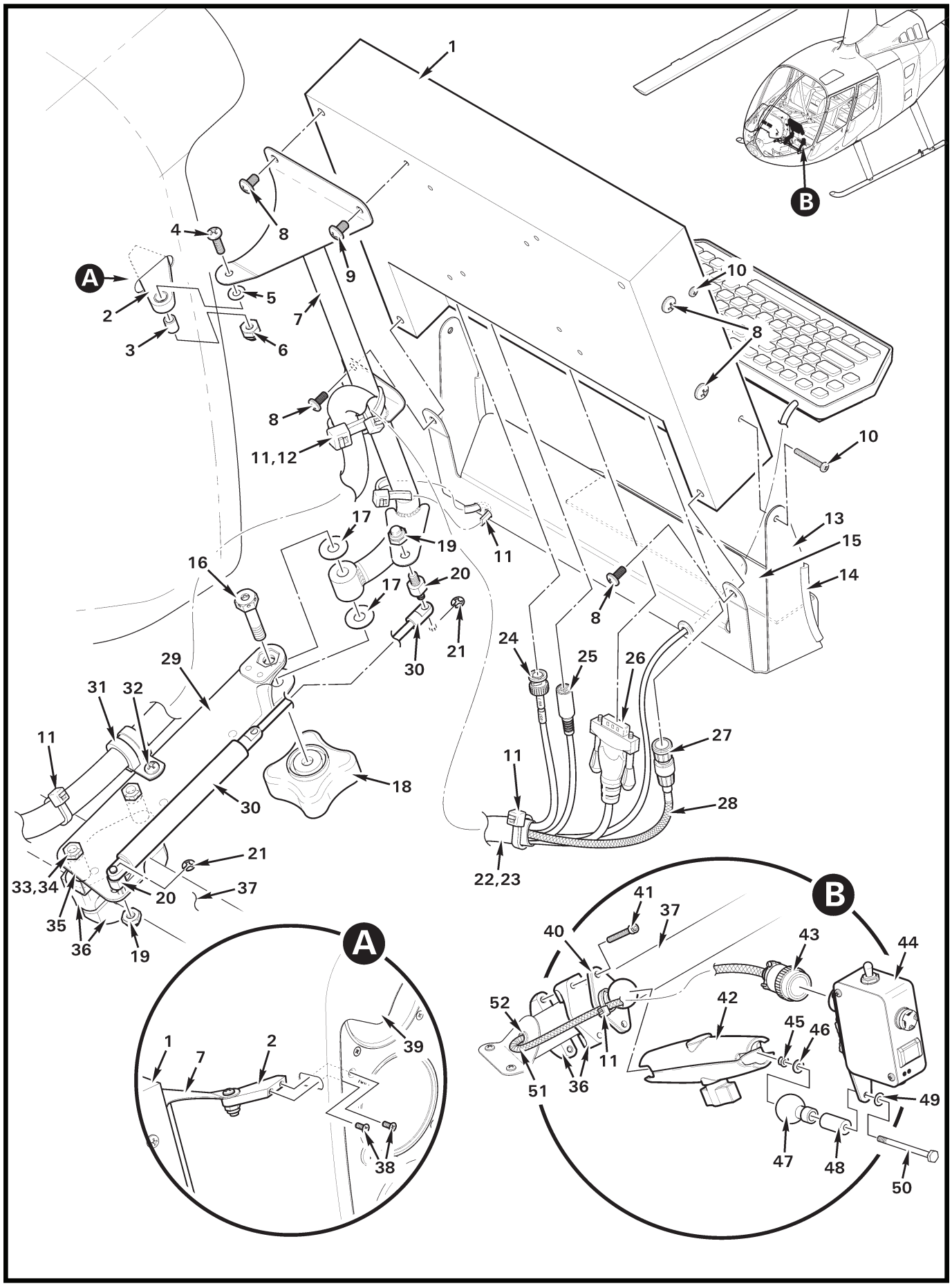

FIGURE 90-45B G416-4 MONITOR INSTALLATION

FIGURE AND INDEX NUMBER	PART NUMBER	DESCRIPTION	PARTS AVAIL	QTY PER ASSY
		G416-4 MONITOR INSTALLATION		
90-45B-1	DVI 10LDB_RH*	Monitor	O	1
2	G417-3	Block Assembly	X	1
3	A105-5	Journal	X	1
4	MS27039C0808	Screw	X	1
5	NAS1149FN816P	Washer (between journal and weldment)	X	1
6	B340-4	Nut	X	1
7	G417-1	Pivot Assembly	X	1
8	MS27039C1-04	Screw	X	6
9	90116A205	Screw	X	1
10	MS35206-226	Screw	X	4
11	MS3367-5-0	Ty-Rap	X	A/R
12	MS3367-7-0	Ty-Rap	X	A/R
13	G417-4	Tray Assembly	X	1
14	A226-11	Trim	X	A/R
15	B175-11	Hook Tape	X	A/R
16	MS20074-04-10	Bolt	X	1
17	A141-7	Washer (each side of pivot assembly)	X	2
18	2454K28	Knob (hand tight)	X	1
19	B340-8	Nut	X	2
20	G418-3	Stud	X	2
21	MS16633-2015	Ring	X	2
22	G458	Harness Assembly (Ref; Police)		
23	B226-8	Sleeving	X	A/R
24	-937	Wire (Ref)		
	2065-11-9	BNC Plug	X	1
	B158-3	Heat Shrink	X	A/R
25	F8V308-12	S-VIDEO Cable	X	1
26	F2N028-02-GLD	Cable (receptacle end)	X	1
27	-882	Wire (Ref)		
	-936	Wire (Ref)		
	16282-2PG-311	Plug	X	1
	B158-01	Heat Shrink	X	A/R
28	B266-4	Sleeving	X	A/R
29	G417-2	Support Assembly	X	1
30	9417K421	Gas Spring	X	1

NOTES * Boland part number.

Continues

FIGURE AND INDEX NUMBER	PART NUMBER	DESCRIPTION	PARTS AVAIL	QTY PER ASSY
		G416-4 MONITOR INSTALLATION (Cont'd)		
90-45B-31	MS21919WDG8	Clamp	X	1
32	MS27039C0806	Screw	X	1
33	NAS6603-25	Bolt	X	2
34	NAS1149F0316P	Washer	X	2
35	A130-59	Spacer	X	2
36	B630-1	Clamp Assembly	X	1
37	G703-8	Support (Ref)		
38	MS24693-26	Screw	X	2
39	G060-4	Console (Ref)		
40	RAM-B-238	Mount	X	1
41	NAS1351-3-24	Screw	X	2
42	RAM-B-201-C	Arm	X	1
43	MS3116F14-19S	Plug (D599-13 harness)	X	1
	MS3116F12-10S	Plug (D599-14 harness)	X	1
44	D426-9	Searchlight Control (slaved to camera)	X	1
	D426-10	Searchlight Control (manual)	X	1
45	D210-3	Nut	X	1
46	NAS1149F0363P	Washer (between mount and nut)	X	1
47	RAM-B-367	Mount	X	1
48	G429-17	Spacer	X	1
49	NAS1149F0316P	Washer (between bolt and plate)	X	1
50	NAS6603-36	Bolt	X	1
51	D599-13	Harness (slave, includes item 43)	X	1
	D599-14	Harness (manual, includes item 43)	X	1
52	MS35489-9	Grommet	X	1

NOTES

Intentionally Blank

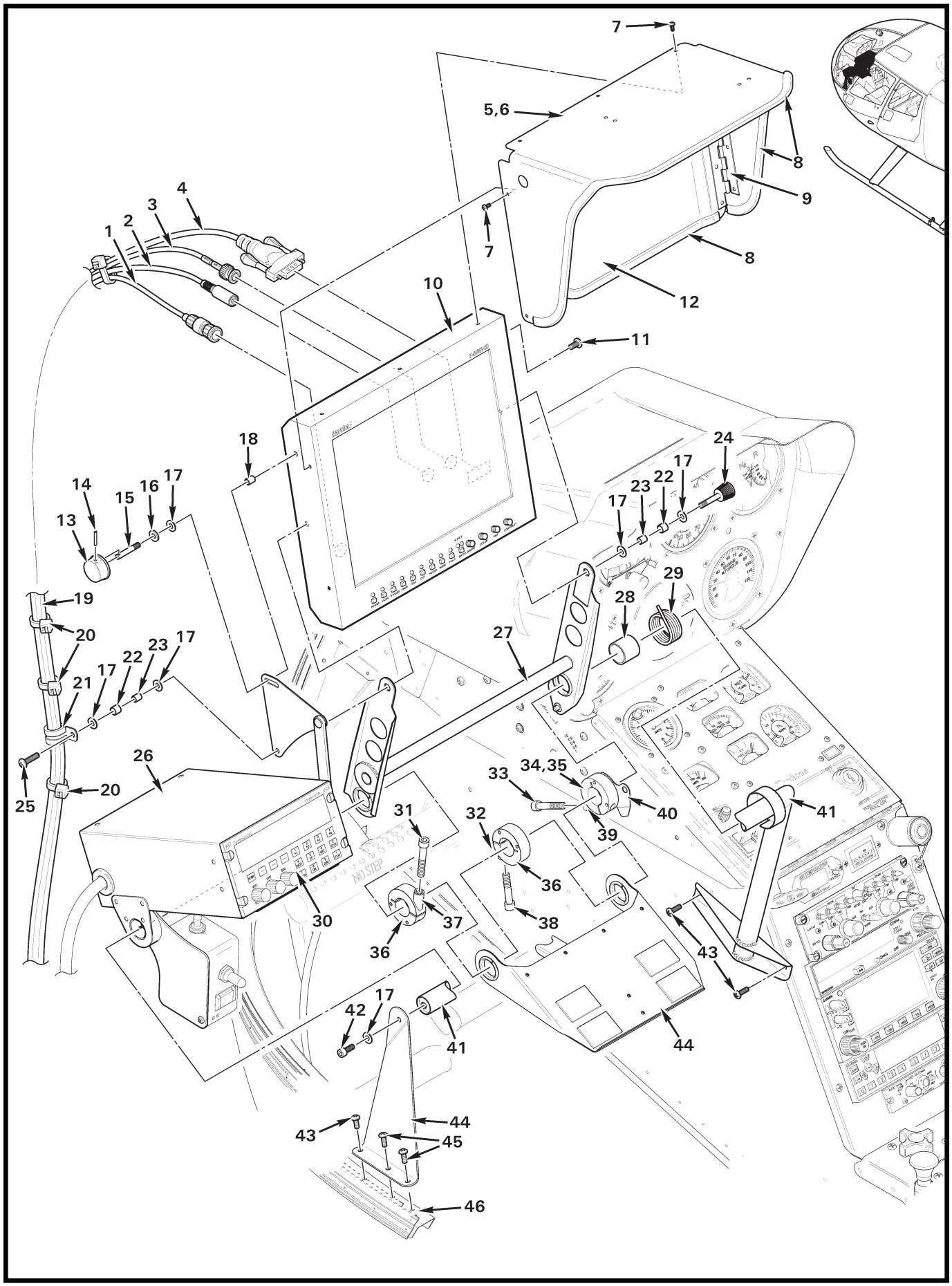
7
5,6
8
9
4
3
2
1
7
8
12
10
11
18
24
17
23
22
17
14
15
16
17
13
29
28
19
20
27
23
17
22
17
21
26
34,35
33
25
20
40
41
31
32
39
36
30
37
38
36
43
17
42
41
44
44
43
45
46

FIGURE AND INDEX NUMBER	PART NUMBER	DESCRIPTION	PARTS AVAIL	QTY PER ASSY
		G416-1 MONITOR INSTALLATION		
90-47-1	16282-2PG	Plug (Ref)		
2	F8V308-1	S-Video Cable (Ref)		
3	2065-11-9	BNC Plug (Ref)		
4	F2N08-6-GLD	Cable (Ref)		
5	D763-3	Visor Assembly (Incl items 6, 8, 9, and 12)	X	1
6	D764-2	Visor	X	1
7	MS35206-225	Screw	X	7
8	A226-11	Trim	X	A/R
9	D694-4	Hinge	X	1
10	V-R1041-RH	Monitor (Ref; Marshall 10.4 inch)		
11	MS27039C1-06	Screw	X	1
12	D765-2	Screen	X	1
13	A483-1	Knob	X	1
14	MS16562-27	Spring Pin	X	1
15	D407-13	Shaft	X	1
16	NAS1149F0363P	Washer	X	1
17	NAS1149F0332P	Washer	X	6
18	A130-25	Spacer	X	1
19	G458-1	Harness Assembly (Ref)		
20	MS3367-5-0	Ty-Rap	X	A/R
21	MS21919WDG8	Clamp	X	1
22	04DU04	Bearing	X	2
23	A105-9	Journal	X	2
24	DK-225	Knob	X	1
25	MS27039C1-12	Screw	X	1
26	G413-1	Box Assembly (Ref, see Figure 90-7)		
27	D409-8	Pivot Assembly	X	1
28	D410-5	Tube	X	1
29	D410-6	Spring	X	1
30	TDFM-600	Transceiver (Ref; see Figure 90-7)		
31	NAS1351-4-24	Screw	X	1
32	C130-57	Spacer	X	1
33	NAS1351-4-24	Screw	X	1
34	D445-1	Collar Assembly (Incl items 33, 35, 39, and 40)	X	1
35	D410-3	Collar	X	1

NOTES

Continues

FIGURE AND INDEX NUMBER	PART NUMBER	DESCRIPTION	PARTS AVAIL	QTY PER ASSY
		G416-1 MONITOR INSTALLATION (Cont'd)		
90-47-36	D410-3	Screw	X	1
37	C130-34	Spacer	X	1
38	NAS1351-4-20	Screw	X	1
39	C130-34	Spacer	X	2
40	D410-2	Arm	X	1
41	D406-9	Support Assembly	X	1
42	NAS1352-3-8	Screw	X	1
43	MS27039C0806	Screw	X	3
44	D609-4	Tray Assembly (Ref)		
45	MS27039C0807	Screw	X	2
46	F090-1	Frame (Ref)		

NOTES

Intentionally Blank

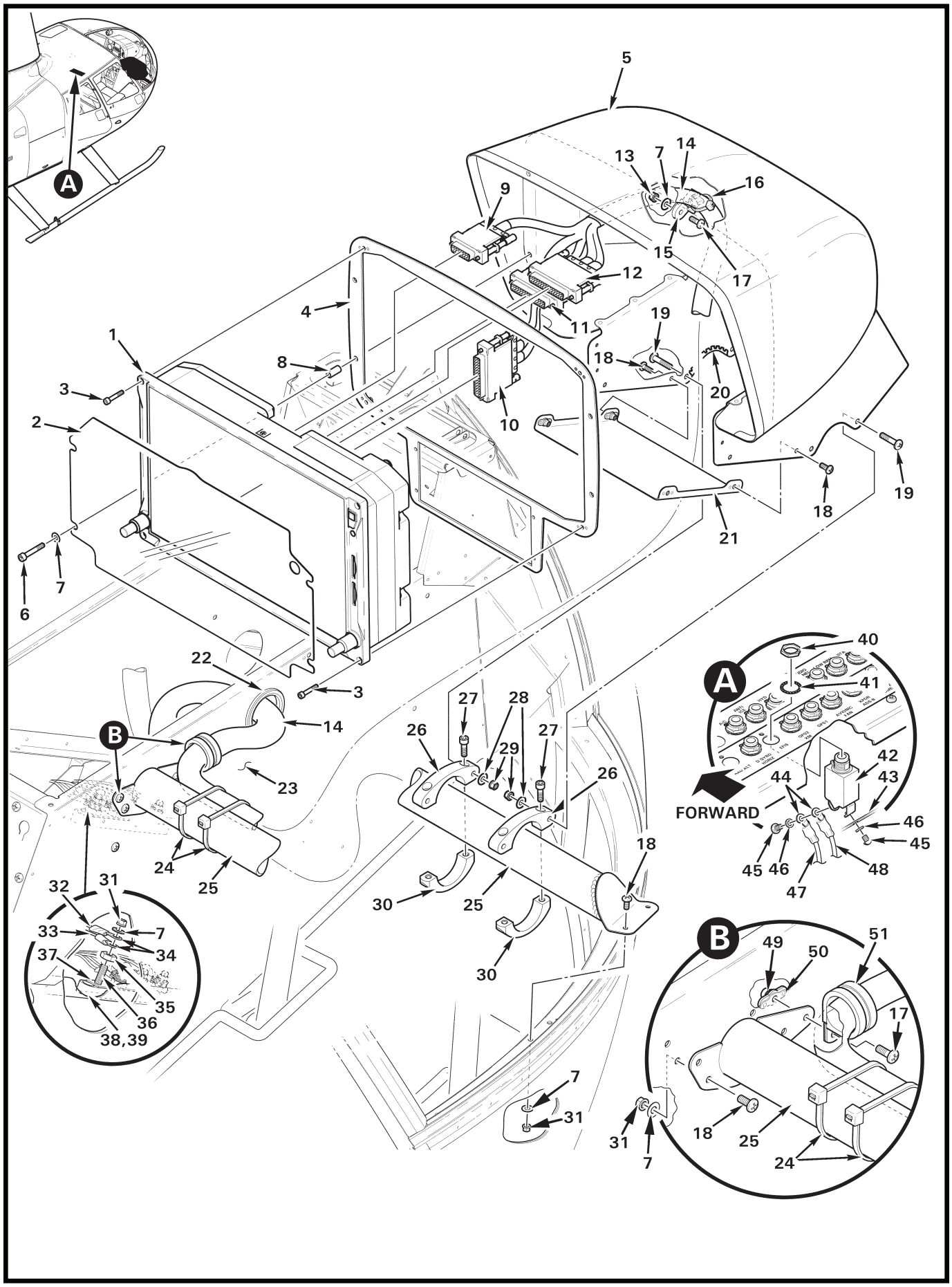

FIGURE 90-51 PILOT'S SIDE CONSOLE – GDU 1060 TXi DISPLAY

FIGURE AND INDEX NUMBER	PART NUMBER	DESCRIPTION	PARTS AVAIL	QTY PER ASSY
		PILOT'S SIDE CONSOLE – GDU 1060 TXi DISPLAY		
90-51-1	GDU 1060 TXi*	Display (PFD and MFD; includes items 3, and 9 thru 12)	X	1
2	D327-5	Shield	X	1
3	211-64307-14*	Screw (or NAS1352-06-16)	O	4
4	G413-7	Face Assembly	X	1
5	G071-10	Console Assembly	X	1
6	NAS1352-08-16	Screw	X	4
7	NAS1149FN816P	Washer	X	1
8	C130-63	Spacer	X	4
9	—	Connector (Ref; "J1")		
10	—	Connector (Ref; "J3")		
11	—	Connector (Ref; "J4")		
12	—	Connector (Ref; "J2")		
13	MS21042L08	Nut	X	6
14	F816-3	Harness Assembly (Incl items 9 thru 12)	X	1
15	D268-1	Support	X	1
16	MS3367-5-0	Ty-Rap	X	A/R
17	MS27039C0807	Screw	X	2
18	MS27039C0806	Screw	X	9
19	MS27039C1-13	Screw	X	4
20	A225-1	Grommet	X	A/R
21	G413-11	Cover Assembly	X	1
22	B401-3	Grommet	X	1
23	F033-1	Console Assembly – Lower (Ref)		
24	MS3367-7-0	Ty-Rap	X	1
25	G703-19	Support Assembly	X	1
26	B630-16	Clamp	X	2
27	NAS1351-3-16	Screw	X	2
28	NAS1149F0316P	Washer	X	4
29	D210-3	Nut	X	4
30	B630-11	Clamp Assembly	X	2
31	MS21042L08	Nut	X	1
32	-2589	Wire (Ref; ground, GSU 75 ADAHRS)		
33	-2564	Wire (Ref; ground, GDU 1060 TXi display)		
34	B260-3	Terminal	X	1
35	B301-8	Nut	X	1

NOTES * Garmin part no.

Continues

FIGURE AND INDEX NUMBER	PART NUMBER	DESCRIPTION	PARTS AVAIL	QTY PER ASSY
		PILOT'S SIDE CONSOLE – GDU 1060 TXi DISPLAY (Cont'd)		
90-51-36	B567-43	Screw	X	1
37	A448-10	Bus Bar (4 holes)	X	1
38	C448-2	Terminal Block (4 holes; includes items 35 thru 37 and 39)	X	1
39	C448-5	Block (4 holes)	X	1
40	—	Nut	O	1
41	—	Washer	O	2
42	B297-5	Circuit Breaker (5 amp; includes items 40, 41, 45, and 46)	X	1
43	—	Bus Bar (Ref)		
44	B260-2	Terminal	X	2
45	—	Screw	O	2
46	—	Washer	O	2
47	-2563	Wire (Ref; power, GDU 1060 TXi display)		
48	-2695	Wire (Ref; power, GSU 75 ADAHRS)		
49	MS21069L08K	Nutplate (install using item 50)	X	1
50	MS20426AD3	Rivet	X	2
51	MS21919WDG16	Clamp	X	1

NOTES

Intentionally Blank

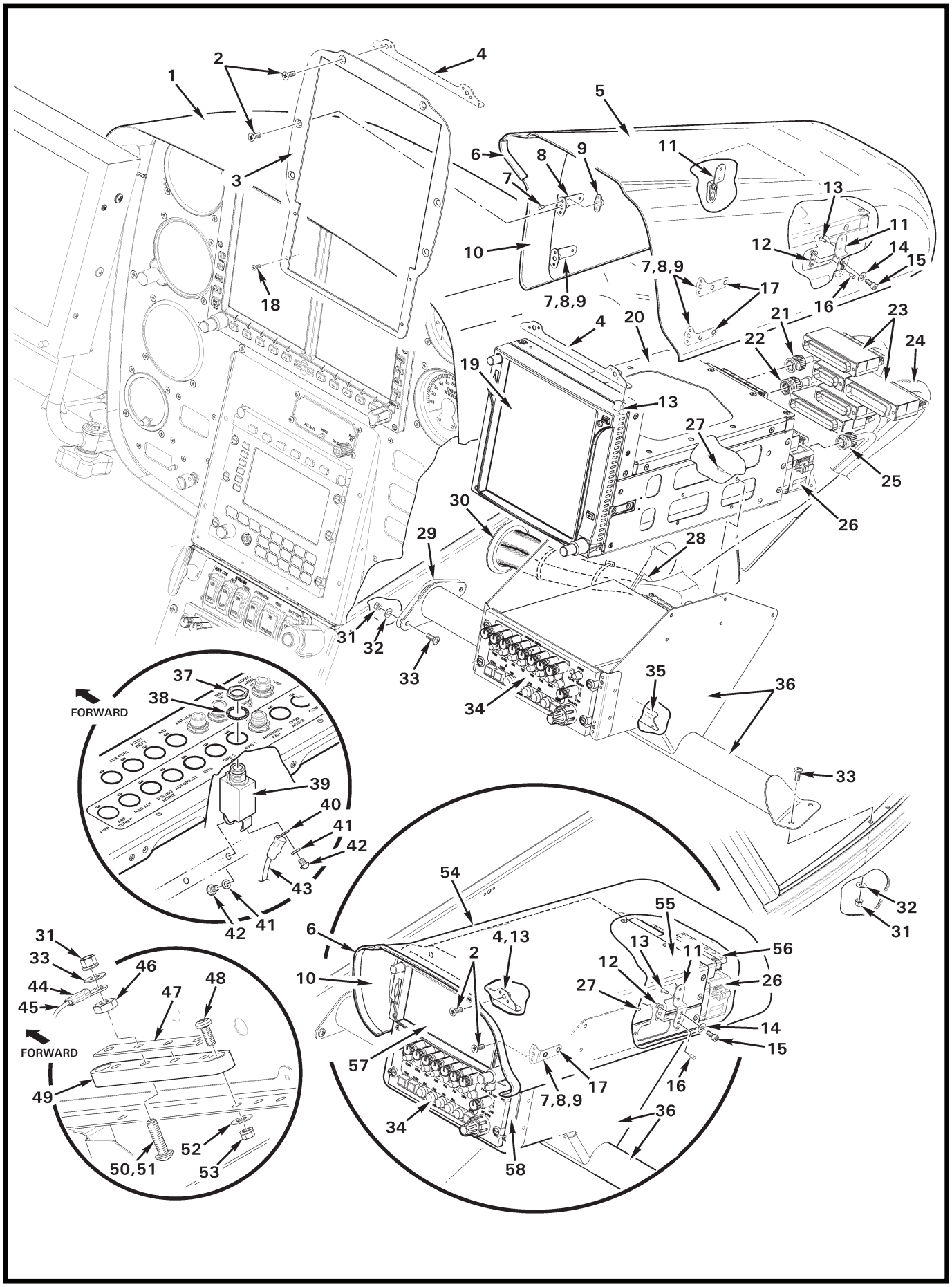
1
2
3
4
5
6
7
8
9
10
11
12
13
14
15
16
17
18
19
20
21
22
23
24
25
26
27
28
29
30
31
32
33
34
35
36
37
38
39
40
41
42
43
44
45
46
47
48
49
50,51
52
53
54
55
56
57
58
7,8,9
4,13
FORWARD
FORWARD

FIGURE AND INDEX NUMBER	PART NUMBER	DESCRIPTION	PARTS AVAIL	QTY PER ASSY
		PILOT'S SIDE CONSOLE – GPS/NAV/COM INSTALLATION		
90-53B-1	G060-4	Console Assembly (Ref)		
2	MS24694-S4	Screw	X	A/R
3	G704-19	Face	X	1
4	G704-7	Angle Assembly (includes nutplates)	X	1
5	G704-2	Shell Assembly (Incl item 6 thru 10)	X	1
6	A226-11	Trim (install with retaining rib on inside)	X	A/R
7	NAS1097AD3	Rivet	X	2
8	B181-6	Angle	X	A/R
9	NAS21069A08	Nutplate	X	4
10	B298-10	Vinyl	X	A/R
11	D704-10	Bracket Assembly (Incl items 12 and 16)	X	2
12	MS21071L06	Nutplate	X	1
13	MS20426AD3	Rivet	X	7
14	NAS1149FN616P	Washer	X	2
15	92196A145	Screw	X	2
16	MS20426AD3	Rivet	X	2
17	MS20470AD3	Rivet	X	4
18	MS35206-214	Screw	X	4
19	GTN 750*	Transceiver (GPS/NAV/COM; includes items 20, 23, and 26)	X	1
20	115-01294-__*	Mounting Rack	O	1
21	5225395-6	Plug (BNC; installed on GPS antenna cable)	X	1
22	5225555-6	Plug (TNC; installed on COM antenna cable)	X	A/R
23	011-02326-0X*	Connector Kit ([5] connectors [P1001 thru P1005], see R66 Maintenance Manual for wire assignments)	O	1
24	B266-8	Sleeving	X	A/R
25	5225395-6	Plug (BNC; installed on NAV antenna cable)	X	1
26	371-00014-01*	Fan	O	1
27	NAS1097AD4	Rivet	X	10
28	MS21919WDG__	Clamp (Ref, see Figure 97-33)		
29	G703-12	Shim	X	A/R
30	B401-3	Grommet	X	1
31	MS21042L08	Nut	X	5
32	NAS1149FN816P	Washer	X	4
33	MS27039C0806	Screw	X	4
34	A711L**	Audio Control Panel (Ref, see Figure 90-9)		

NOTES * Garmin part no.
** Technisonic part no.

Continues

FIGURE AND INDEX NUMBER	PART NUMBER	DESCRIPTION	PARTS AVAIL	QTY PER ASSY
		PILOT'S SIDE CONSOLE – GPS/NAV/COM INSTALLATION (Cont'd)		
90-53B-35	G704-20	Support (see Figure 90-9)	X	1
36	G705-10	Support Assembly	X	1
37	—	Nut	O	1
38	—	Washer	O	1
39	B297-5	Circuit Breaker (5 amp, includes items 37, 38, 40, and 42)	X	1
40	B260-2	Terminal	X	1
41	—	Lockwasher	O	2
42	—	Screw	O	2
43	-466	Wire (Ref; power [GPS 1])		
	-1426	Wire (Ref; power [GPS 2])		
44	B260-3	Terminal	X	1
45	-465	Wire (Ref; ground [GPS 1])		
	-1427	Wire (Ref; ground [GPS 2])		
46	B301-8	Nut	X	4
47	A448-10	Bus Bar (4-hole)	X	1
48	MS35206-228	Screw	X	2
49	C448-2	Block Assembly (Incl items 46, 47, 50, and 51)	X	1
50	B567-43	Screw (install using item 51)	X	4
51	B270-9	Adhesive	X	A/R
52	NAS1149FN616P	Washer	X	2
53	MS21042L06	Nut	X	2
54	G704-1	Shell Assembly (Incl items 6 thru 10)	X	1
55	115-01293-__*	Mounting Rack	O	1
56	011-02325-0X	Connector Kit ([4] connectors [P1001 thru P1004], see R66 MM §98 for wire assignments)	O	1
57	GTN 650*	Transceiver (Incl items 25, 55, and 56)	X	1
	GTN 635*	Transceiver (Incl items 25, 55, and 56)	X	1
58	G704-18	Face	X	1

NOTES * Garmin Corp. part no.

Intentionally Blank

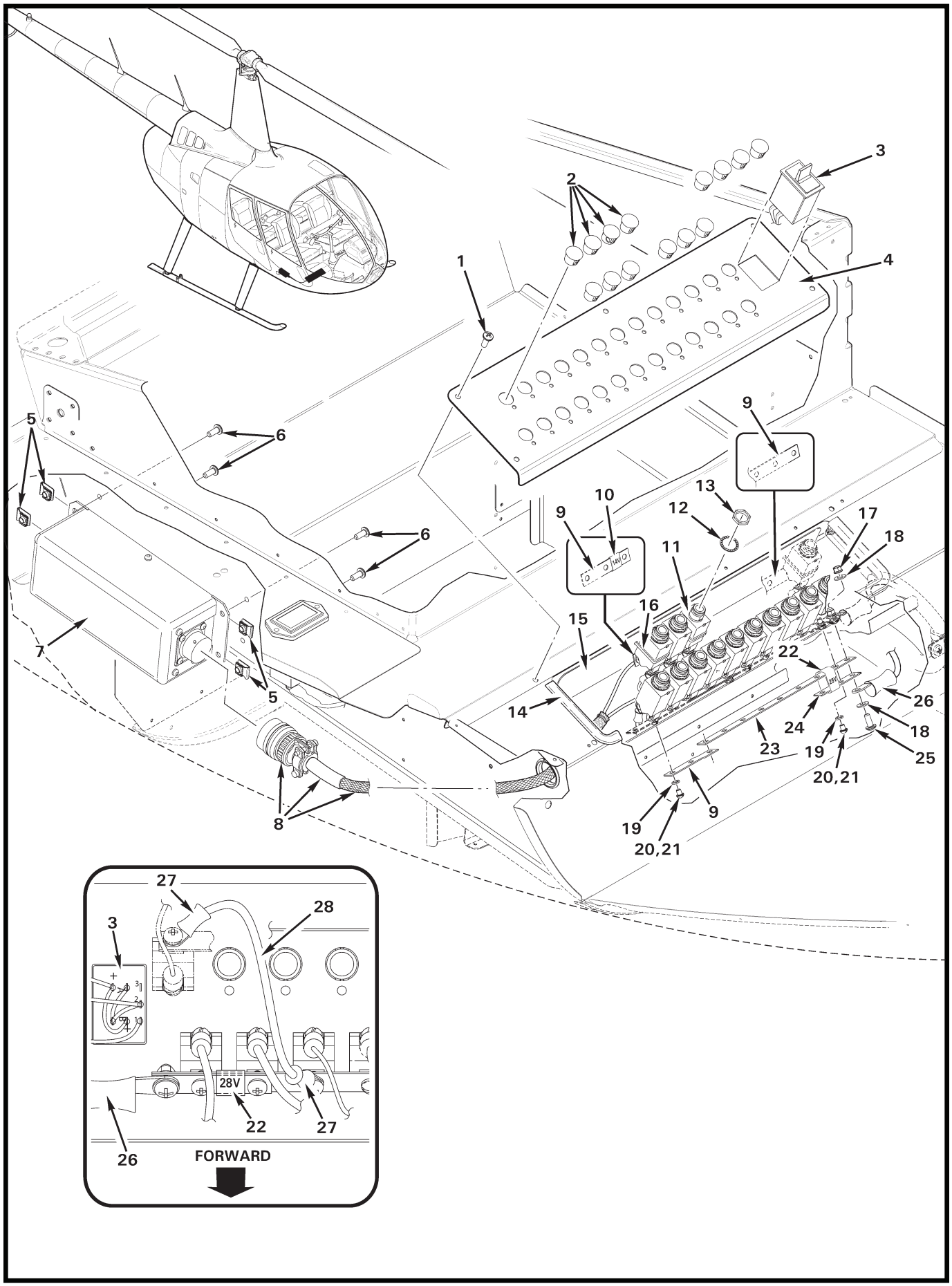

FIGURE 90-55 G423-1 AUX ELECTRICAL SYSTEM – 28-TO-14 VOLT CONVERTER & CB PANEL

FIGURE AND INDEX NUMBER	PART NUMBER	DESCRIPTION	PARTS AVAIL	QTY PER ASSY
		G423-1 AUX ELECTRICAL SYSTEM – 28-TO-14 VOLT CONVERTER & CB PANEL		
90-55-1	90337A182	Screw (or MS27039C0807)	X	5
2	2633	Hole Plug	X	A/R
3	G049-1	Switch Assembly	X	1
4	G422-1	Panel (police)	X	1
5	B162-2*	Clipnut	X	4
6	MS27039C0806*	Screw	X	4
7	LT-71A*	Converter – Power (28-to-14 volt, 8-amp output)	X	1
8	D392-11*	Harness Assembly	X	1
9	A448-1	Bus Bar (6 breakers)	X	A/R
	A448-4	Bus Bar (3 breakers)	X	A/R
	A448-9	Bus Bar (9 breakers)	X	A/R
	A448-10	Bus Bar (4 breakers)	X	A/R
	A448-14	Bus Bar (8 breakers)	X	A/R
10	B158-6	Heat Shrink (labeled “14V”)	X	A/R
11	B297-2	Circuit Breaker (2-amp; includes items 12 and 13)	X	2
	B297-5*	Circuit Breaker (5-amp; includes items 12 and 13)	X	5
	B297-7	Circuit Breaker (7.5-amp; includes items 12 and 13)	X	A/R
	B297-15	Circuit Breaker (15-amp; includes items 12 and 13)	X	1
12	—	Washer (internal teeth)	O	1
13	—	Nut	O	1
14	A226-15	Trim	X	A/R
15	G596-3	Shield (clear polycarbonate)	X	1
16	MS3367-4-9	Ty-Rap (used with item 15)	X	A/R
17	MS21042L08	Nut	X	1
18	NAS1149DN832H	Washer	X	2
19	—	Washer (split)	O	1
20	—	Screw (or item 21)	O	1
21	MS35206-226	Screw	X	1
22	B158-406	Heat Shrink (labeled “28V”)	X	A/R
23	A448-12	Bus Bar (9 breakers, one hole “offset”)	X	1
24	A448-13	Bus Bar (3 breakers, one hole “offset”; used as a doubler)	X	1
25	MS27039C0806	Screw	X	1
26	-874	Wire (power “in” from relay; Ref)		
27	B260-11	Terminal	X	2
28	-1603	Wire (jumper, 28-volt; Ref)		

NOTES * Earlier R66 police ships.

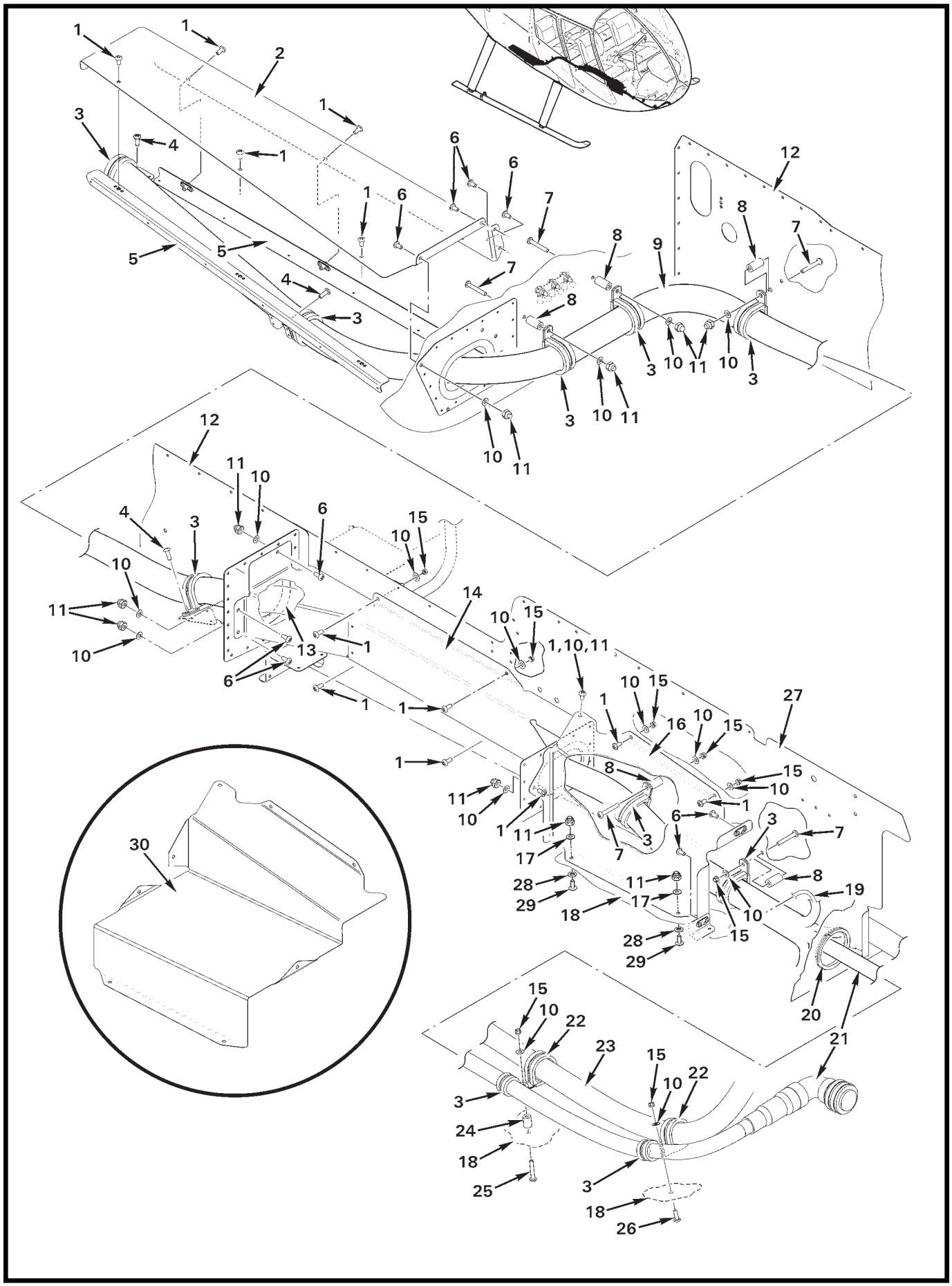

FIGURE 90-57 G423-1 AUX ELECTRICAL SYSTEM – HARNESS ASSEMBLY

FIGURE AND INDEX NUMBER	PART NUMBER	DESCRIPTION	PARTS AVAIL	QTY PER ASSY
		G423-1 AUX ELECTRICAL SYSTEM – HARNESS ASSEMBLY		
90-57-1	MS27039C0805	Screw	X	A/R
2	G701-1	Guard	X	1
3	MS21919WDG_	Clamp (DG4 thru 26 as required)	X	10
4	MS27039C0807	Screw	X	3
5	G701-3	Angle Assembly (Ref)		
6	MS27039C0806	Screw	X	13
7	MS27039C0818	Screw	X	5
8	C130-56	Spacer	X	5
9	G458-1	Harness Assembly (Ref)		
10	NAS1149FN816P	Washer	X	A/R
11	B340-4	Nut	X	A/R
12	F292-2	Keel Panel – RH (Ref)		
13	A226-15	Trim	X	A/R
14	G700-3	Cover Assembly	X	1
15	MS21042L08	Nut	X	8
16	G702-1	Cover Assembly (for ships without Inertial Monitoring Unit installed)	X	1
17	NAS1149FN832P	Washer	X	2
18	F272-1	Chin (Ref)		
19	D392-11*	Harness Assembly (to 14-volt converter)		
20	NAS557-28A	Grommet	X	1
21	—	Camera Cable (Ref)		
22	MS21919WCH18	Clamp (Ref; heater hose)		
23	A785-39	Hose (Ref; heater installation)		
24	A130-38	Spacer	X	1
	A130-33*	Spacer	X	1
25	MS27039C0817	Screw	X	1
	MS27039C0813*	Screw	X	1
26	AN526C832R9	Screw	X	1
27	F293-2	Keel Panel – RH (Ref)		
28	B527-08	Washer (nylon)	X	2
29	B526-6	Screw	X	2
30	G702-11	Cover (for ships with Inertial Monitoring Unit installed)	X	1

NOTES * Earlier police ships.

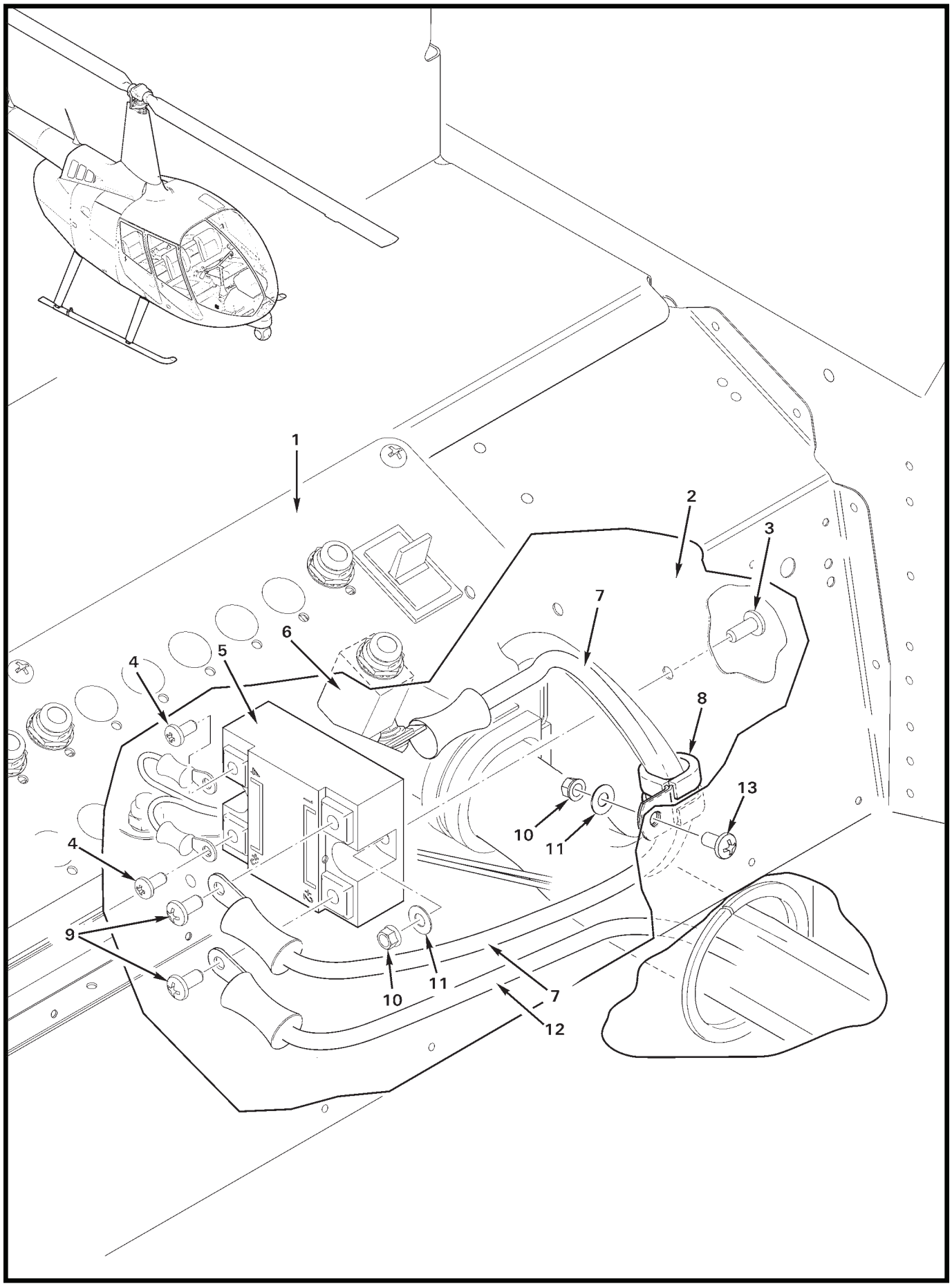
1
2
3
4
5
6
7
8
9
10
11
12
13

FIGURE AND INDEX NUMBER	PART NUMBER	DESCRIPTION	PARTS AVAIL	QTY PER ASSY
		G423-1 AUX ELECTRICAL SYSTEM – RELAY		
90-59-1	G422	Panel – Aux Circuit Breaker (Ref)		
2	F293-2	Keel Panel – RH (Ref)		
3	MS27039C0806	Screw	X	2
4	—	Screw (small)	O	2
5	D06D100	Relay (Incl items 4 and 9)	X	1
6	B297-7	Circuit Breaker – "14V CONV" (Ref, see Figure 90-55)		
7	-874	Wire (Ref)		
8	MS21919WDG	Clamp (MS21919WDG4 thru 26 as required)	X	1
9	—	Screw (large)	O	2
10	MS21042L08	Nut	X	2
11	NAS1149FN816P	Washer	X	2
12	A780-63	Cable Assembly (wire #873; Ref)		
13	MS27039C0805	Screw	X	1

NOTES

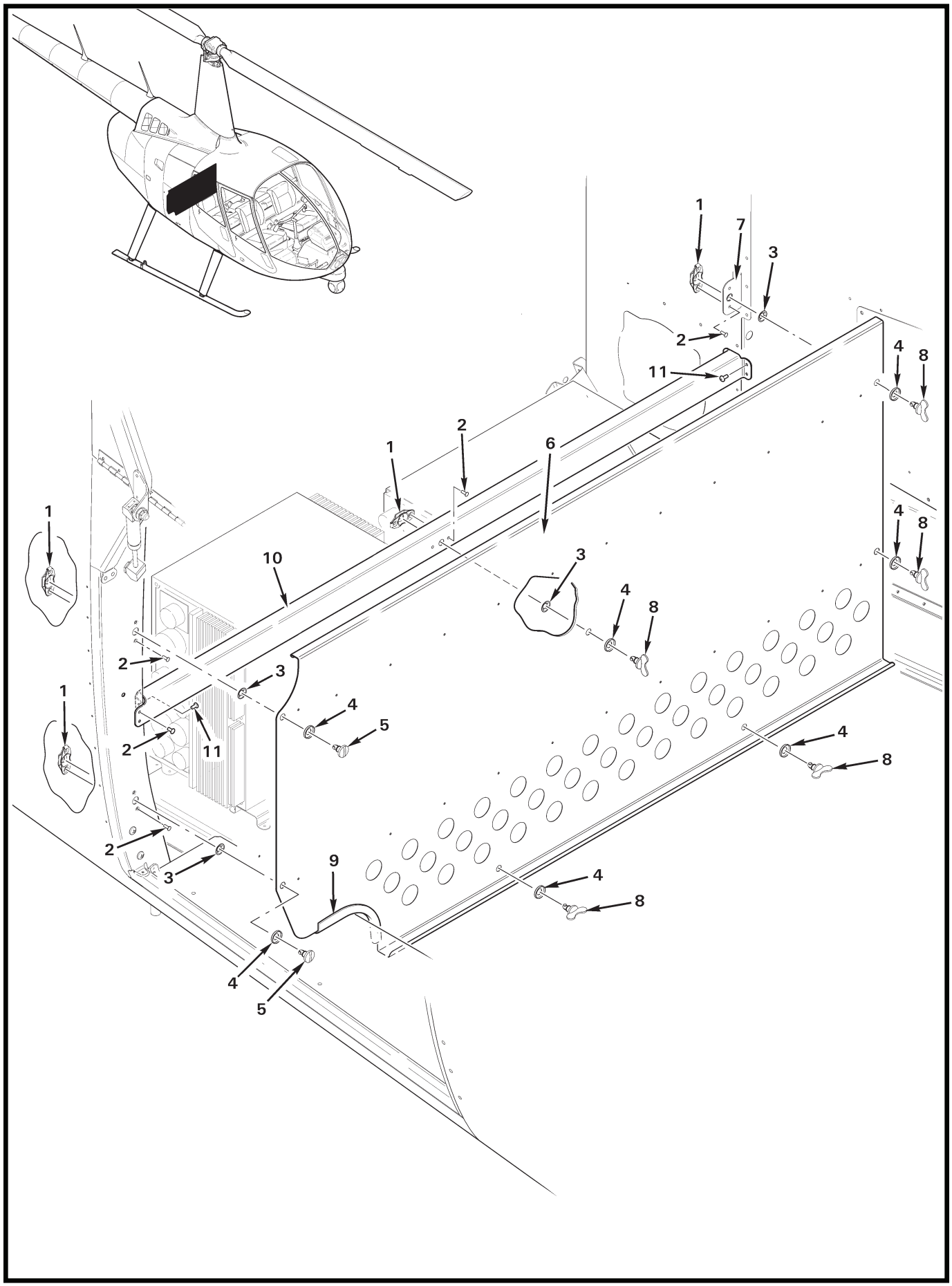

FIGURE 90-61 G425-1 WALL INSTALLATION

FIGURE AND INDEX NUMBER	PART NUMBER	DESCRIPTION	PARTS AVAIL	QTY PER ASSY
		G425-1 WALL INSTALLATION		
90-61-1	85-35-295-15	Receptacle	X	A/R
2	MS20426AD4	Rivet	X	16
3	85-34-201-20	Retaining Ring	X	7
4	85-46-101-39	Washer	X	7
5	85-11-140-16	Stud	X	2
6	G428-1	Wall Assembly (Incl items 3 thru 5, and 8)	X	1
7	G428-2	Angle Assembly (Incl item 1; Ref)		
8	85-12-140-16	Stud	X	5
9	A226-15	Trim	X	A/R
10	G431-5	Beam Assembly (Incl items 1 and 2)	X	1
11	MS20470AD4	Rivet	X	6

NOTES

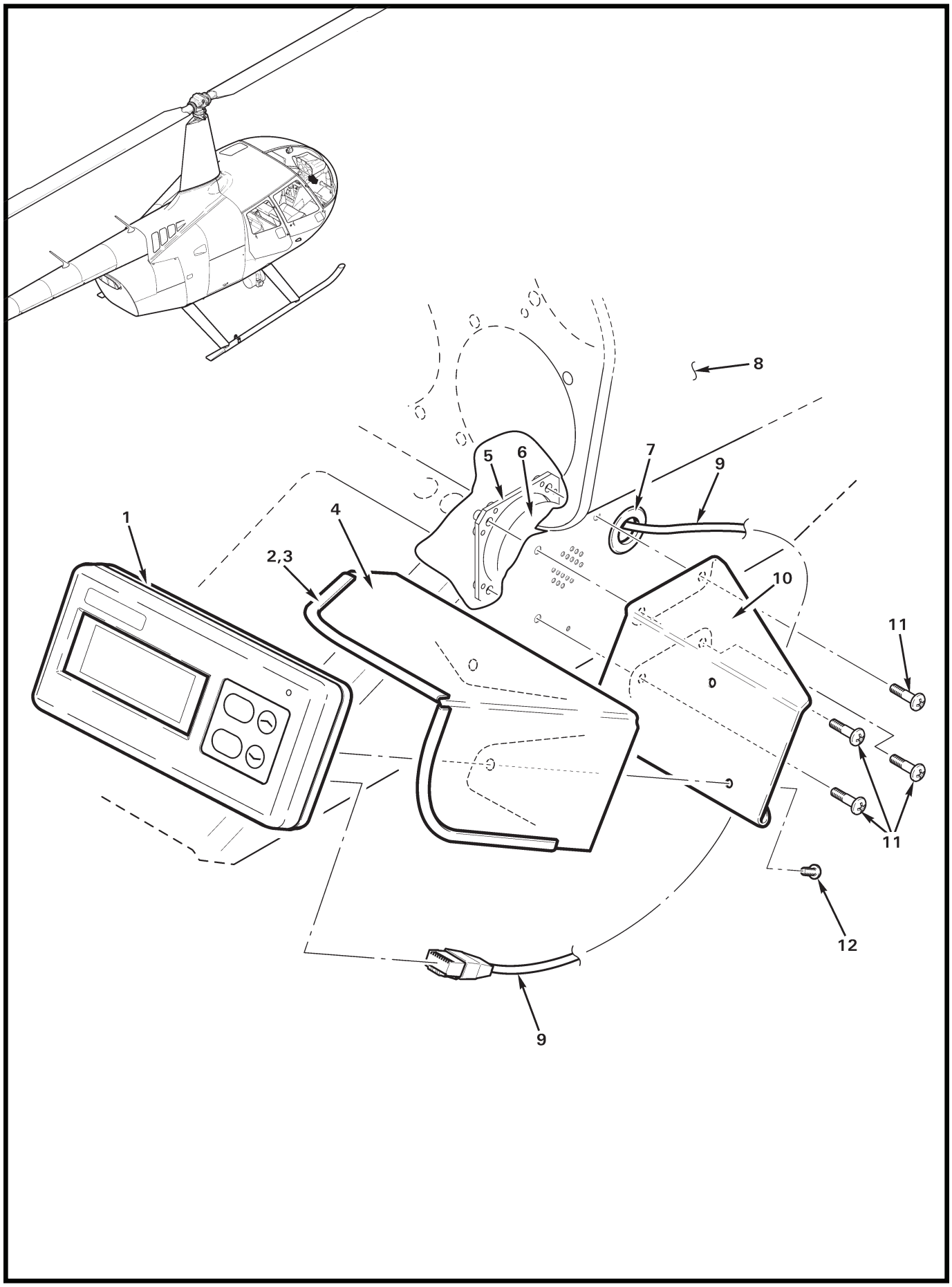

FIGURE 90-63 G437-1 LOJACK INSTALLATION – DISPLAY

FIGURE AND INDEX NUMBER	PART NUMBER	DESCRIPTION	PARTS AVAIL	QTY PER ASSY
		G437-1 LOJACK INSTALLATION – DISPLAY		
90-63-1	4106-0006-00	Display	O	1
2	A226-9	Molding	X	A/R
3	B270-8qt	Adhesive	X	A/R
4	D600-3	Visor Assembly (Incl items 2 and 3)	X	1
5	A479-2	Ring (Ref)		
6	B320-3	Horn Assembly (Ref)		
7	MS35489-149	Grommet	X	1
8	B050	Console Assembly (Ref)		
9	0001-0039-00	Cable (Ref)		
10	D436-6	Support	X	1
11	MS27039C0810	Screw	X	10
12	MS27039C1-04	Screw	X	2

NOTES

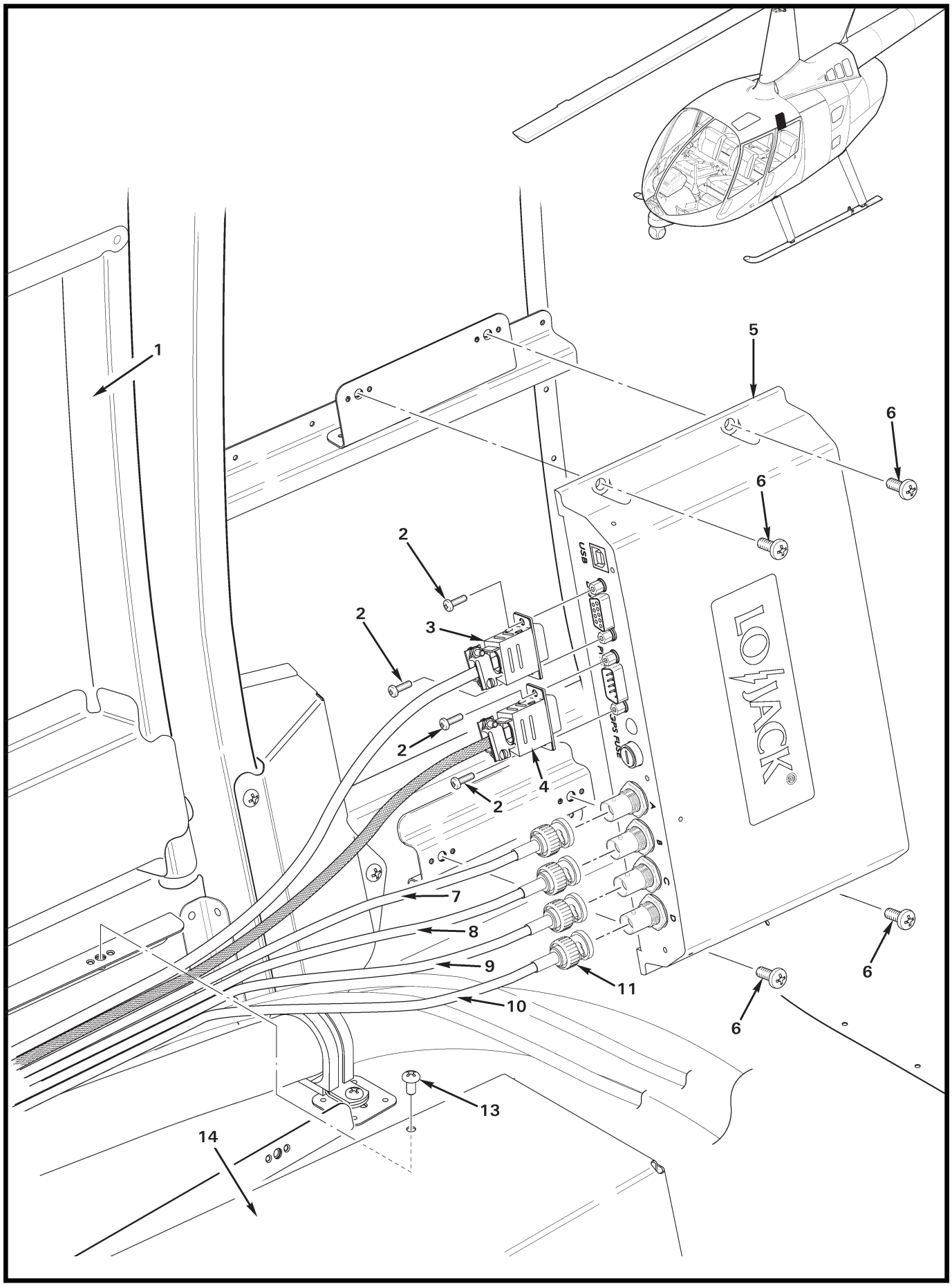

FIGURE 90-65 G437-1 LOJACK INSTALLATION – RECEIVER

FIGURE AND INDEX NUMBER	PART NUMBER	DESCRIPTION	PARTS AVAIL	QTY PER ASSY
		G437-1 LOJACK INSTALLATION – RECEIVER		
90-65-1	G900-1	Baggage Door Assembly (Ref)		
2	—	Screw	O	4
3	B269-3	Plug	X	1
	B269-21	Backshell	X	1
	B269-31	Screw Lock (male)	X	2
4	B269-4	Receptacle	X	1
	B269-2	Terminator	X	1
	B269-62	Socket	X	1
	B269-21	Backshell	X	1
	B269-31	Screw Lock (male)	X	2
	B260-3	Terminal (#1892 wire at ground)	X	1
5	4107-0003-10	Receiver (or PTC2A-E)	O	1
6	MS27039C1-08	Screw	X	4
7	D431-2402	Cable Assembly (Incl item 11)	X	1
8	D431-2403	Cable Assembly (Incl item 11)	X	1
9	D431-2404	Cable Assembly (Incl item 11)	X	1
10	D431-2405	Cable Assembly (Incl item 11)	X	1
11	225395-1	Plug (BNC)	X	1
12	G707-1	Cover (Ref)		
13	MS27039C0805	Screw (Ref)		
14	G701-1	Guard	X	1

NOTES

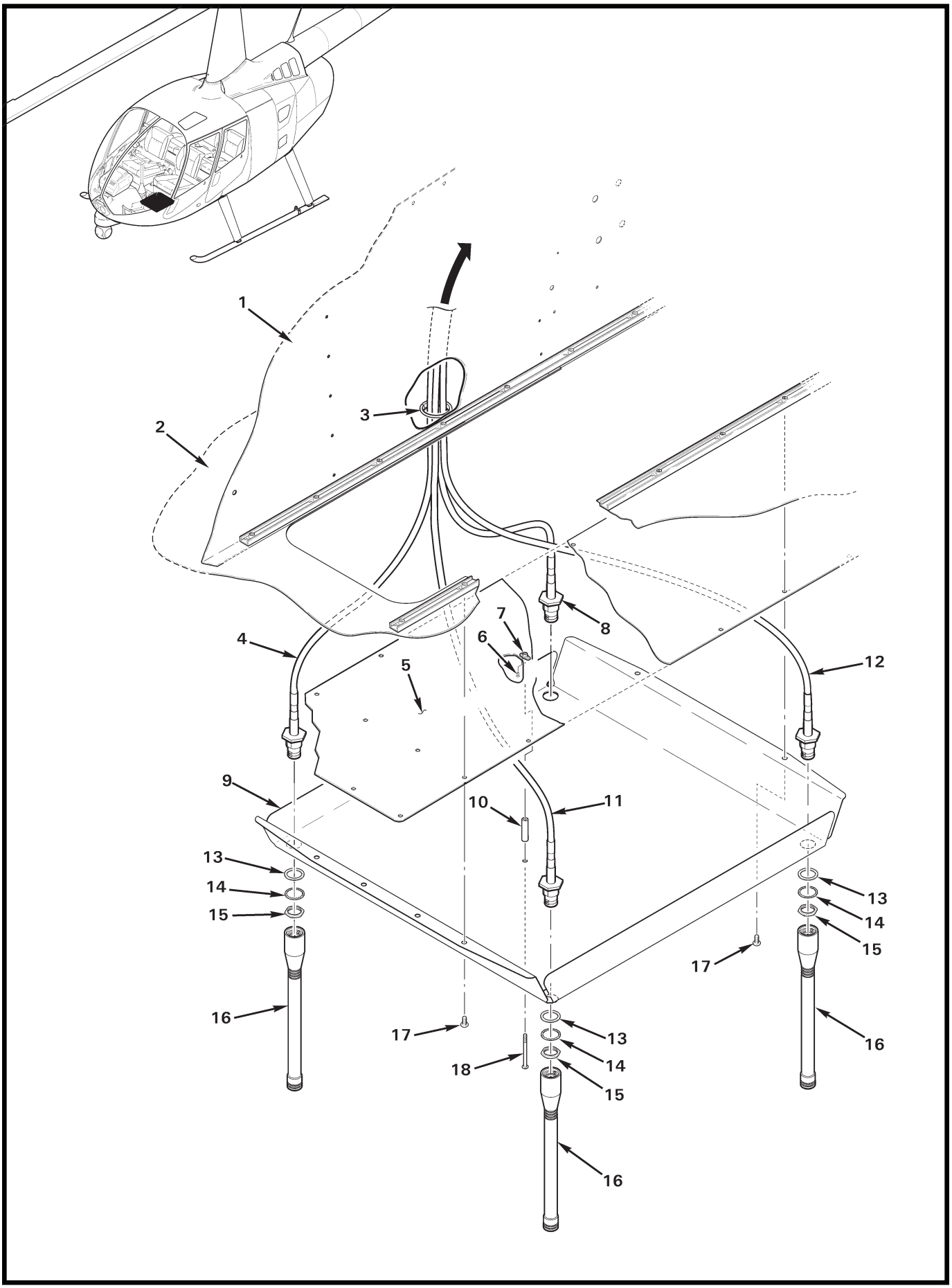
1
2
3
4
5
6
7
8
9
10
11
12
13
14
15
16
17
18
13
14
15
16
17
13
14
15
16

FIGURE AND INDEX NUMBER	PART NUMBER	DESCRIPTION	PARTS AVAIL	QTY PER ASSY
		G437-1 LOJACK INSTALLATION – ANTENNAS		
90-67-1	F293-2	Keel Panel – RH (Ref)		
2	F272-1	Chin (belly; Ref)		
3	NAS557-14B	Grommet	X	1
4	D431-2403	Cable Assembly	O	1
5	F794-1	Panel (Ref)		
6	NAS1097AD3	Rivet	X	2
7	MS21069L3	Nutplate	X	1
8	D431-2404	Cable Assembly	O	1
9	D435-1	Mount	X	1
10	A130-16	Spacer	X	1
11	D431-2402	Cable Assembly	X	1
12	D431-2405	Cable Assembly		
13	—	Gasket	O	1
14	—	Washer (internal teeth)	O	1
15	—	Nut	O	1
16	EXB164BNX	Antenna (Incl items 13 thru 15)	X	4
17	MS27039C0806	Screw (existing; [6] thru item 9)	X	6
18	MS27039C1-30	Screw	X	1

NOTES

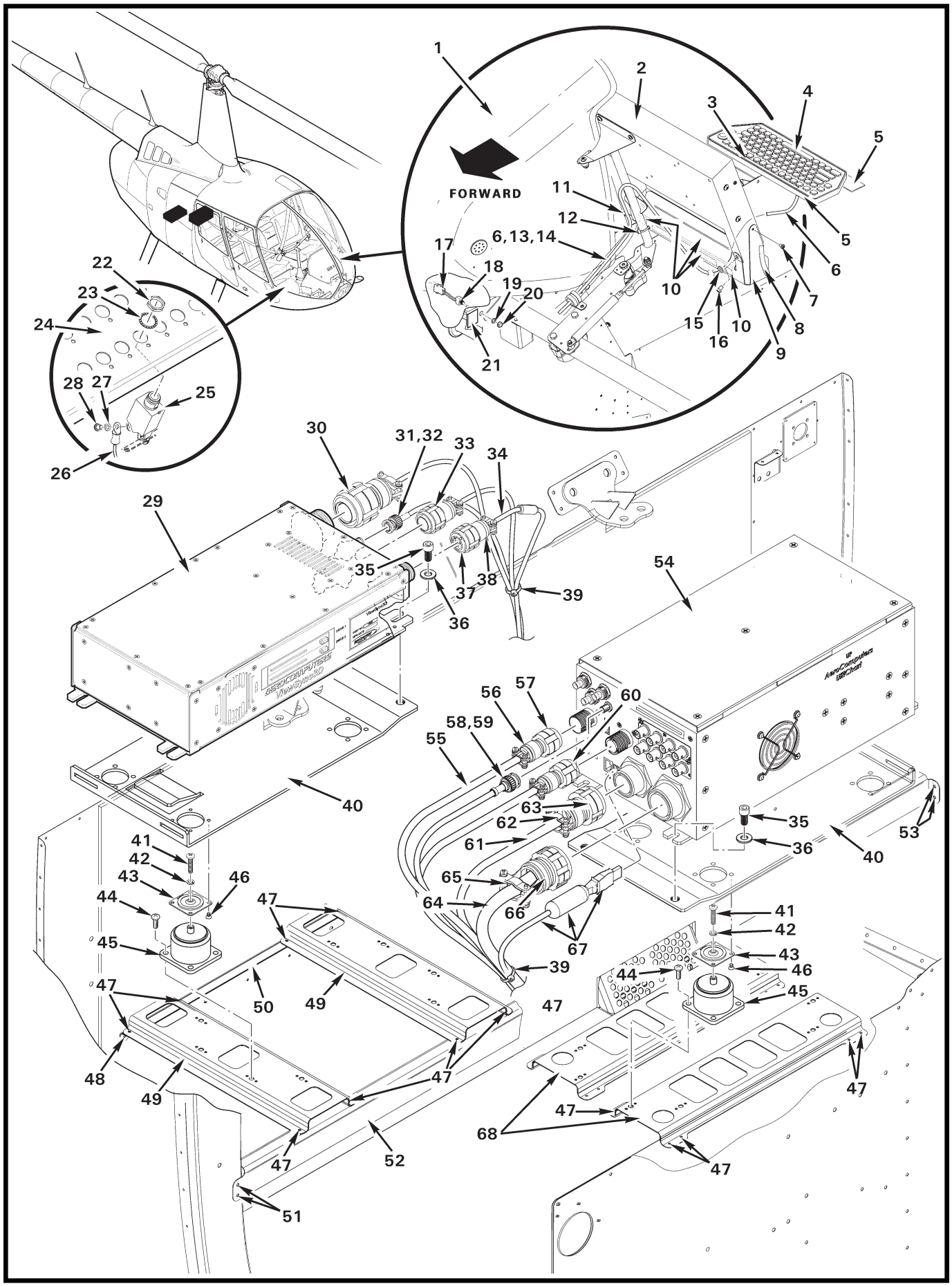
FORWARD
1
2
3
4
5
6
7
8
9
10
11
12
6,13,14
15
16
17
18
19
20
21
22
23
24
25
26
27
28
29
30
31,32
33
34
35
36
37
38
39
40
41
42
43
44
45
46
47
48
49
50
51
52
53
54
55
56
57
58,59
60
61
62
63
64
65
66
67
68

FIGURE AND INDEX NUMBER	PART NUMBER	DESCRIPTION	PARTS AVAIL	QTY PER ASSY
		G608 MAPPING SYSTEM – COMPUTER INSTALLATION		
90-69-1	G060	Console Assembly (Ref)		
2	DVI 10LDB	Monitor (Ref)		
3	D610-5	Decal	X	1
4	D610-6	Keyboard Assembly (Incl items 3, 5, 6, 13, and 14)	X	1
5	B175-12	Loop Tape (two places)	X	A/R
6	—	Cable (keyboard)	O	1
7	MS35206-226	Screw	X	2
8	A226-11	Trim (two places)	X	A/R
9	G417-4	Tray Assembly (Incl items 5, 8, and 10)	X	1
10	B175-11	Hook Tape	X	A/R
11	B458	Harness Assembly – Auxilary (Ref)		
12	MS3367-5-0	Ty-Rap (secures item 9 to pivot assembly)	X	1
13	AE10091-ND	Plug Assembly (not shown)	X	1
14	AE10090-ND	Hood (not shown)	X	1
15	MS35489-4	Grommet	X	1
16	MS27039C1-04	Screw	X	1
17	B049-9	Switch Assembly (Incl item 18)	X	1
18	B300-1	Switch (Incl items 19 and 20)	X	1
19	B227-3	Lockwasher	X	1
20	B227-4	Dress Nut	X	1
21	G682-23	Decal	X	1
22	—	Nut	O	1
23	—	Lockwasher	O	1
24	G422-1	Panel – Circuit Breaker (Ref)		
25	B297-5	Circuit Breaker (5 amp; includes items 22, 23, 27 and 28)	X	1
26	-2247	Wire (power, Ref)		
27	—	Washer (split)	O	1
28	—	Screw	O	1
29	VIEWSYNCC3D	Computer	O	1
30	300817-W	Cable Assembly (supplied with item 29)	O	1
31	D431-2654	Cable Assembly (to FLIR ECU)	X	1
32	2065-11-9	Plug (BNC; shown)	X	1
33	300822-3	Cable	O	1
34	D725-8	Harness Assembly	X	1
35	—	Screw	O	4

NOTES

Continues

FIGURE AND INDEX NUMBER	PART NUMBER	DESCRIPTION	PARTS AVAIL	QTY PER ASSY
		G608 MAPPING SYSTEM – COMPUTER INSTALLATION (Cont'd)		
90-69-36	—	Washer	O	4
37	D38999/26WB5SN	Plug	X	1
38	M80549/38-11W	Backshell	X	1
39	MS3367-4-0	Ty-Rap	X	A/R
40	C00008-D	Tray (Incl items 38 and 39)	O	2
41	MS51957-47	Screw (or MS27039C0810)	X	8
42	MS35338-137	Lockwasher (or B332-42)	X	8
43	100PL-6	Isolator (supplied with item 29)	O	8
44	MS27039C1-07	Screw	X	16
45	H44-AA-4	Mount	X	8
46	—	Screw (supplied with item 29)	O	32
47	NAS9301B-02	Rivet	X	24
48	MS20615-3M	Rivet	X	5
49	G431-1	Support Assembly	X	2
50	G431-4	Angle (Ref)		
51	MS20426AD4	Rivet	X	2
52	G431-5	Beam Assembly	X	1
53	MS20470AD4	Rivet	X	4
54	UC-5300	Computer	O	1
55	D725-5	Harness Assembly ("18-36VDC"; includes items 56 and 57)	X	1
56	M85049/38-11W	Backshell	X	1
57	D38999/26WB45N	Plug	X	1
58	D431-2265	Cable Assembly ("VIDEO IN", includes item 59)	X	1
59	2065-11-9	Plug (BNC; shown)	X	1
60	300822-W	Cable ("VGAIN")	O	1
61	D725-6	Harness Assembly ("VGA KBD"; includes items 62 and 63)	X	1
62	M85049/38-17W	Backshell	X	1
63	D38999/26WE35PN	Plug	X	1
64	D725-7	Harness Assembly ("AUX"; includes items 65 and 66)	X	1
65	M85049/38-21W	Backshell	X	1
66	D38999/26WG35PN	Plug	X	1
67	F3U130-16	Cable (to keyboard)	O	1
68	G429-2	Support Assembly	X	2

NOTES

Intentionally Blank

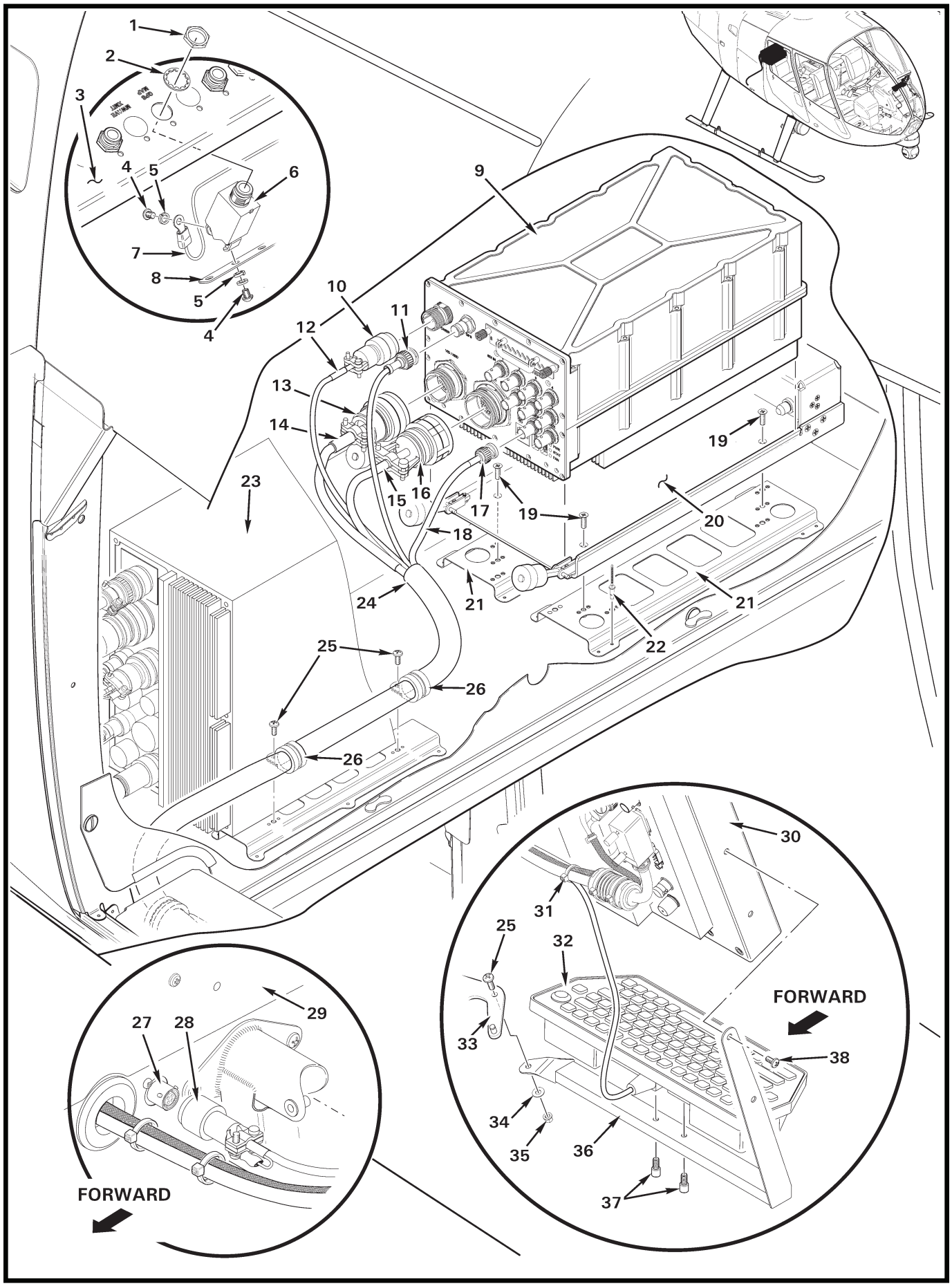

FIGURE 90-71B G608-7/-8 MAPPING SYSTEM – COMPUTER INSTALLATION

FIGURE AND INDEX NUMBER	PART NUMBER	DESCRIPTION	PARTS AVAIL	QTY PER ASSY
		G608-7/-8 MAPPING SYSTEM – COMPUTER INSTALLATION		
90-71B-1	—	Nut	O	1
2	—	Lockwasher	O	1
3	G422-1	Panel – Circuit Breaker (Ref)		
4	—	Screw	O	1
5	—	Washer (split)	O	1
6	B297-5	Circuit Breaker (5 amp; includes items 1, 2, 4 and 5)	X	1
7	-2247	Wire (power, Ref)		
8	A448	Bus Bar (Ref)		
9	UC-6000*	Computer	O	1
10	D38999/26WB2SA	Plug (power)	X	1
	M85049/38-11W	Backshell	X	1
11	5225555-6	Plug (GPS antenna cable)	X	1
12	B158-3	Heat Shrink (labeled “POWER”)	X	A/R
13	D38999/26WE35PN	Plug (VGA/Keyboard)	X	1
	M85049/38-17W	Backshell	X	1
14	B158-8	Heat Shrink (labeled “VGA/KBD”)	X	A/R
15	B158-6	Heat Shrink (labeled “AUX”)	X	A/R
16	D38999/26WG35PN	Plug (FLIR control, FLIR ECU, IMU)	X	1
	M85049/38-21W	Backshell	X	1
17	2065-11-9	Plug (BNC)	X	1
18	D431-2265	Cable Assembly (Incl item 17)	X	1
19	MS24694-C5	Screw	X	4
20	301320A	Tray (included with item 9)	O	1
21	G429-2	Support Assembly	X	2
22	NAS9301B-4-02	Rivet	X	16
23	—	FLIR Electronics Control Unit (Ref)		
24	MS3367-5-0	Ty-Rap	X	1
25	MS27039C0806	Screw	X	2
26	MS21919WDG__	Clamp (DG4 thru DG12 as required)	X	2
27	MS3110E8-4S	Receptacle (Ref)		
28	MS3116F8-4P	Socket	X	1
	B158-4	Heat Shrink	X	A/R
29	—	Console Assembly (Ref)		
30	G416-5	Monitor (Ref)		
31	MS3367-4-0	Ty-rap (Ref)		

NOTES * Aerocomputers part no.

Continues

FIGURE AND INDEX NUMBER	PART NUMBER	DESCRIPTION	PARTS AVAIL	QTY PER ASSY
		G608-7/-8 MAPPING SYSTEM – COMPUTER INSTALLATION (Cont'd)		
90-71B-32	D610-6	Keyboard Assembly (Incl item 28)	X	1
33	G417-5	Pivot Assembly (Ref)		
34	NAS1149FN816P	Washer	X	1
35	B340-4	Nut	X	1
36	G417-7	Tray Weldment	X	1
37	NAS1352-08-4P	Screw	X	2
38	MS27039C1-06	Screw	X	2

NOTES

Intentionally Blank

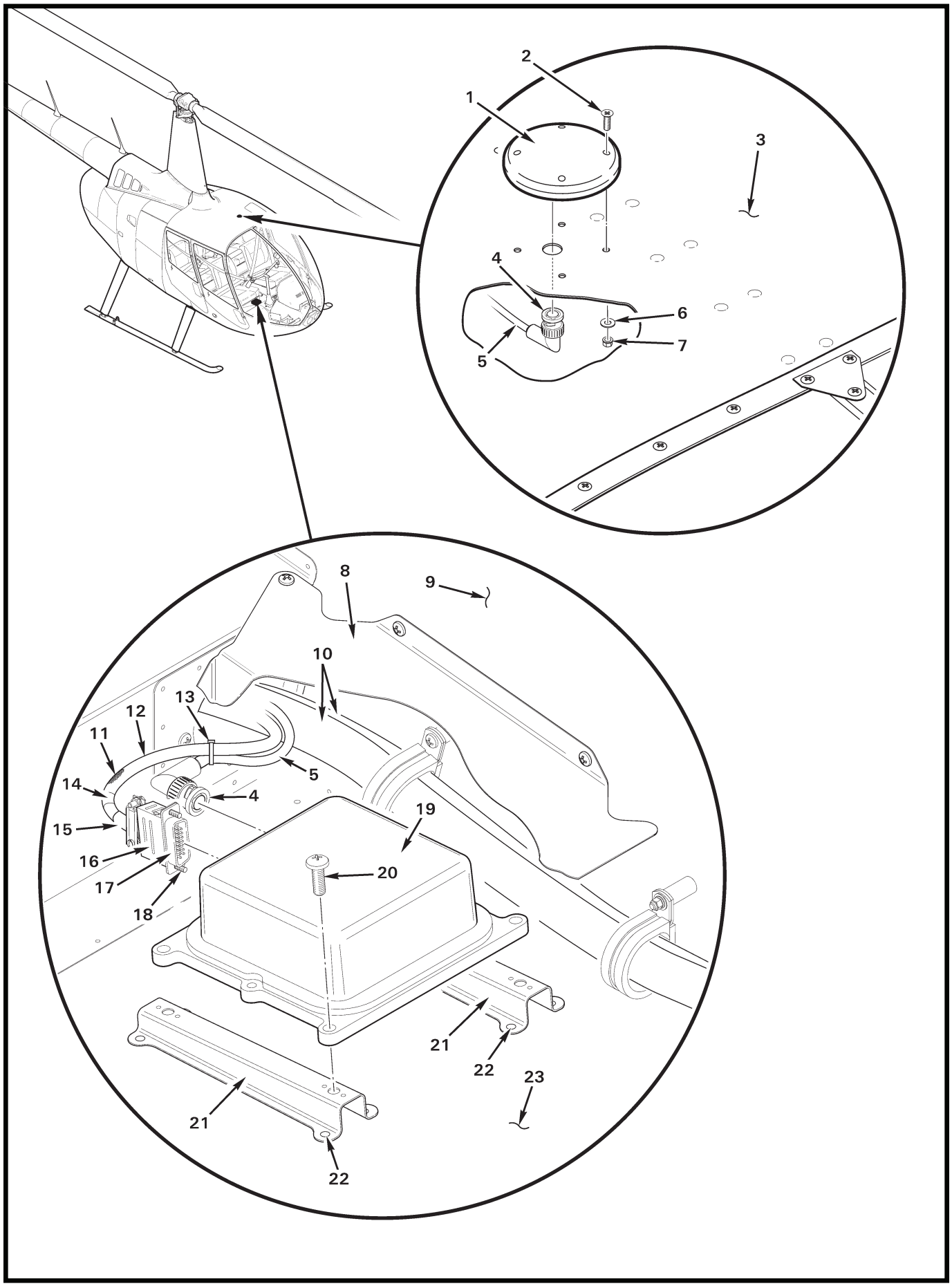
1
2
3
4
5
6
7
8
9
10
11
12
13
14
15
16
17
18
19
20
21
22
23

FIGURE AND INDEX NUMBER	PART NUMBER	DESCRIPTION	PARTS AVAIL	QTY PER ASSY
		G608 MAPPING SYSTEM – COMPONENTS INSTALLATION		
90-73-1	L1/L2	Antenna (GPS)	X	1
2	MS24694-C51	Screw	X	4
3	F273-1	Roof (Ref)		
4	5225554-6	Plug (90°)	X	2
5	B274-518	Cable (antenna)	X	A/R
6	NAS1149F0332P	Washer	X	4
7	MS21042L3	Nut	X	4
8	F702-11	Cover (Ref)		
9	F293-2	Keel Panel (RH, Ref)		
10	G458-1	Harness Assembly – Auxiliary (Ref)		
11	B266-4	Sleeving	X	A/R
12	D725-7	Harness Assembly (Ref; includes items 11, 13, and 15 thru 18)		
13	MS3367-4-0	Ty-Rap	X	A/R
14	B158-6	Heat Shrink (label "IMU")	X	A/R
15	B158-6	Heat Shrink	X	A/R
16	B269-21	Backshell	X	1
17	B269-77	Plug	X	1
18	B269-31	Screw Lock (male)	X	2
19	—	IMU (Inertial Monitoring Unit sensor; supplied with UC-5300, or UC-6000 computer. See Figure 90-69 and 90-71B.)	O	1
20	MS27039C4-11	Screw	X	4
21	G429-15	Support Assembly	X	2
22	MS20470AD4	Rivet	X	8
23	B272-1	Chin (Ref)		

NOTES

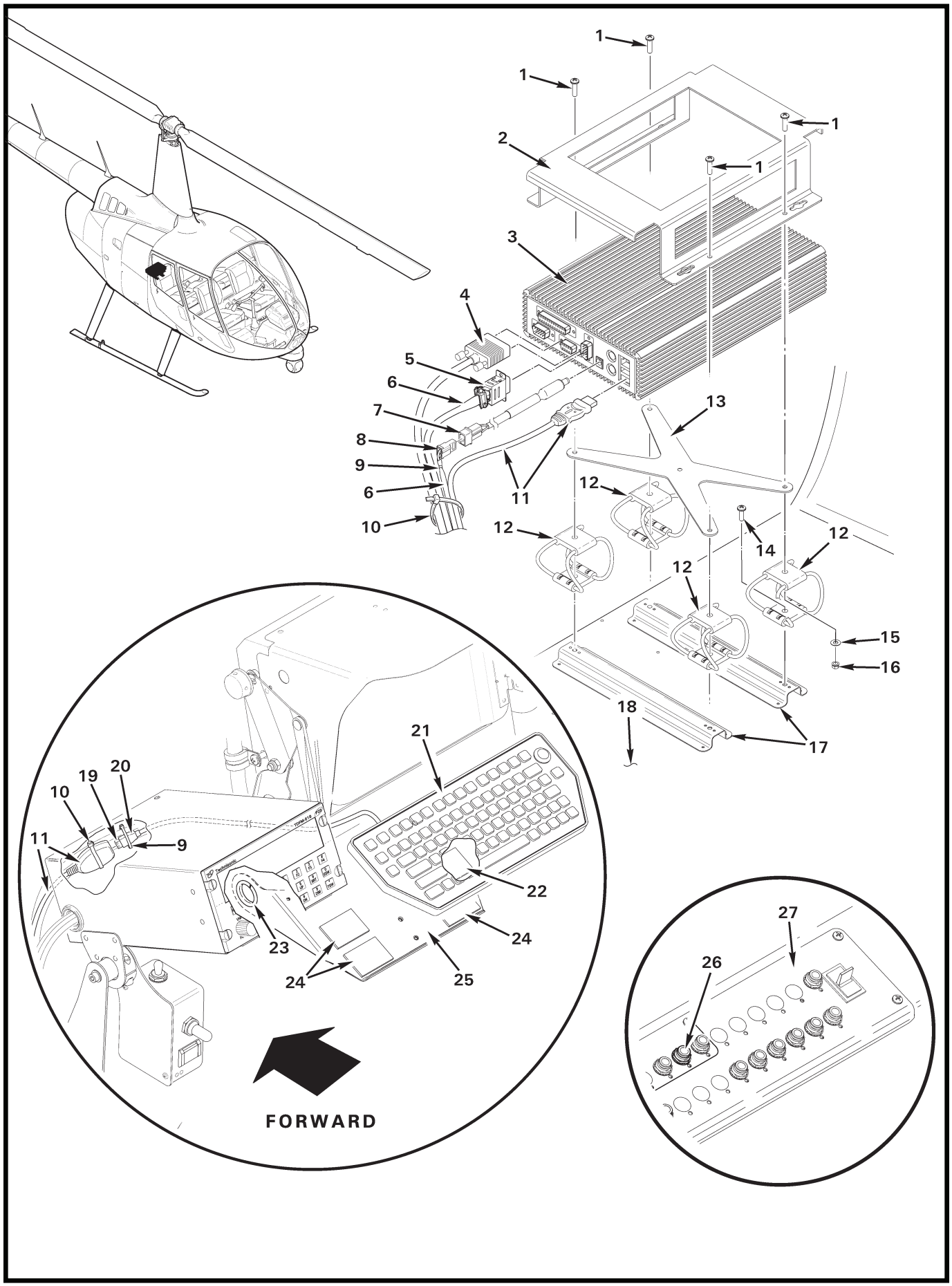
1
1
1
1
2
3
4
5
6
7
8
9
6
10
11
12
12
12
12
13
14
15
16
17
18
19
20
10
11
9
21
22
23
24
24
25
26
27
FORWARD

FIGURE AND INDEX NUMBER	PART NUMBER	DESCRIPTION	PARTS AVAIL	QTY PER ASSY
		G608-1 MAPPING SYSTEM INSTALLATION		
90-75-1	MS27039C0810	Screw	X	4
2	D608-2	Bracket	X	1
3	LPS-460FS	Computer	X	1
4	JV-VGA-15	Cable	X	1
5	B269-4	Receptacle	X	1
	B269-21	Backshell	X	1
	B269-31	Screw Lock (male)	X	2
6	B266-4	Sleeving	X	A/R
7	B263-32	Housing	X	1
	B263-3	Pin	X	2
	B158-4	Heat Shrink	X	A/R
8	B263-33	Housing	X	1
	B263-2	Pin	X	2
	B158-2	Heat Shrink	X	A/R
9	MS3367-4-0	Ty-Rap	X	A/R
10	MS3367-5-0	Ty-Rap	X	A/R
11	F3U130-16	Cable (USB, to keyboard [item 21]; Ref)		
12	CR4-300-S	Isolator	X	4
13	D617-5	Plate	X	1
14	MS27039C0808	Screw	X	4
15	NAS1149FN816P	Washer	X	4
16	MS21042L08	Nut	X	4
17	G429-11	Support Assembly (Ref)		
18	G241-1	Floor (Ref)		
19	AE10090-ND	Hood	X	1
20	AE10091-ND	Plug Assembly	X	1
21	D610-6	Keyboard Assembly (includes items 19, 20, 22, and cable; assembled)	X	1
22	B175-12	Loop Tape	X	A/R
23	NAS557-12A	Grommet	X	2
24	B175-11	Hook Tape	X	A/R
25	D609-4	Tray Assembly (Incl items 23 and 24)	X	1
26	B297-5	Circuit Breaker (5-amp)	X	1
27	G442-1	Circuit Breaker Panel (auxiliary, Ref)		

NOTES

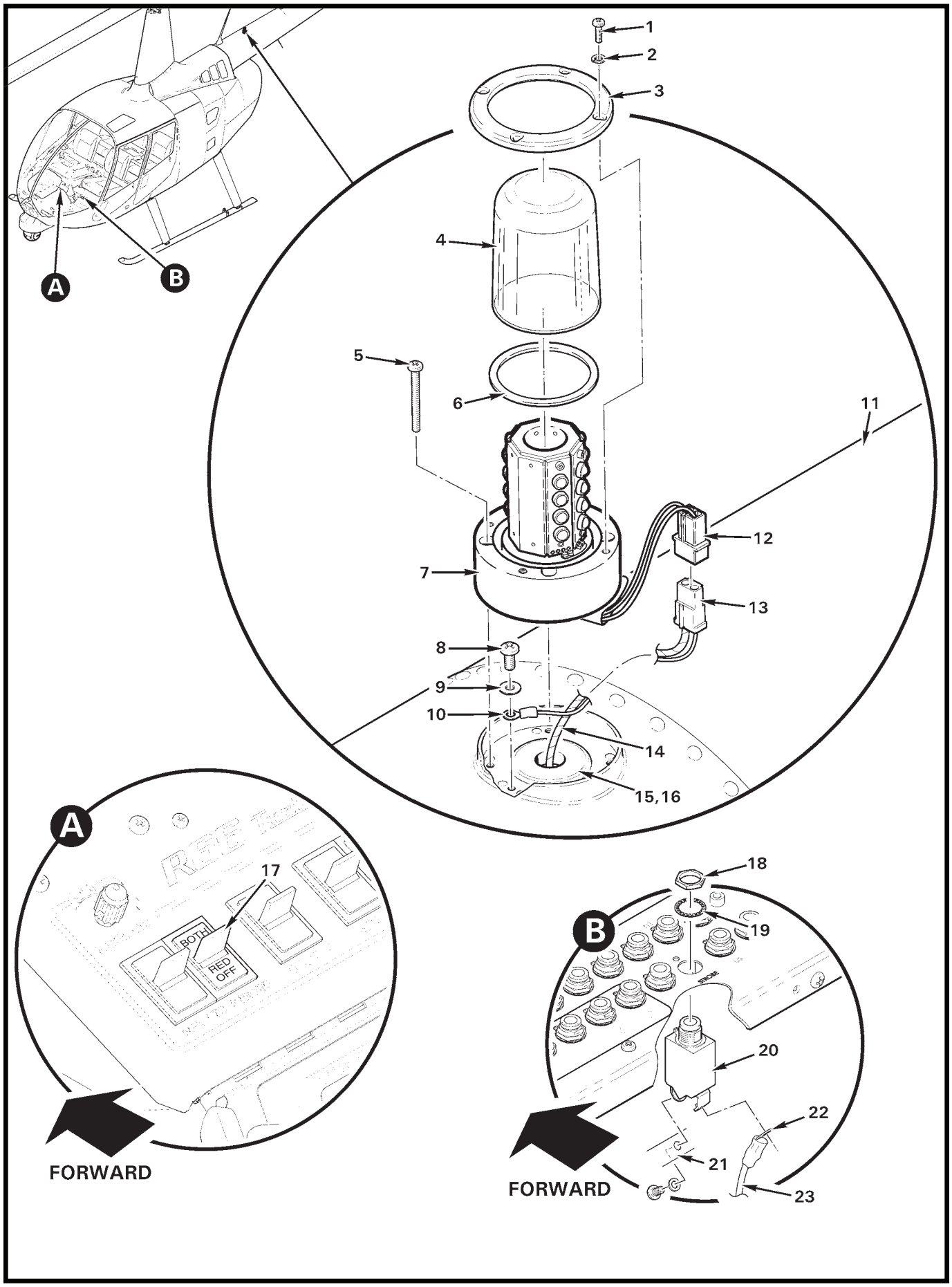

FIGURE 90-77 G685-1 AUX STROBE INSTALLATION

FIGURE AND INDEX NUMBER	PART NUMBER	DESCRIPTION	PARTS AVAIL	QTY PER ASSY
		G685-1 AUX STROBE INSTALLATION		
90-77-1	14-0050505-14*	Screw	O	4
2	16-0050506135*	Lockwasher (MS35338-135)	O	4
3	19-171047-100*	Retainer	O	1
4	68-4971082A30*	Lens (clear)	O	1
5	MS35206-329	Screw	O	4
6	30-0250885-00*	Gasket	O	1
7	A708-13	Strobe Light Assembly (red; incl items 1 thru 4, 6, and 12)	X	1
	A708-15	Strobe Light Assembly (blue; incl items 1 thru 4, 6, and 12)	X	1
	A708-16	Strobe Light Assembly (white; incl items 1 thru 4, 6, and 12)	X	1
8	MS27039C0806	Screw	X	1
9	NAS1149FN832P	Washer	X	2
10	B260-3	Terminal	X	2
11	C023	Tailcone Assembly (Ref)		
12	02-0230007-00*	Housing	O	1
	—	Pin	X	2
13	B263-13	Housing	X	1
	—	Socket	X	2
14	B161-2	Spirap	X	A/R
15	MS35489-15	Grommet	X	1
16	B270-8qt	Adhesive	X	4
17	B184-14	Switch Assembly	X	1
18	—	Nut	O	1
19	—	Washer	O	1
20	B297-7	Circuit Breaker (7 1/2 amp; includes items 18 and 19)	X	1
21	A448-1	Bus Bar (Ref)		
22	B260-3	Terminal (Ref)		
23	-105	Wire (Ref)		

NOTES

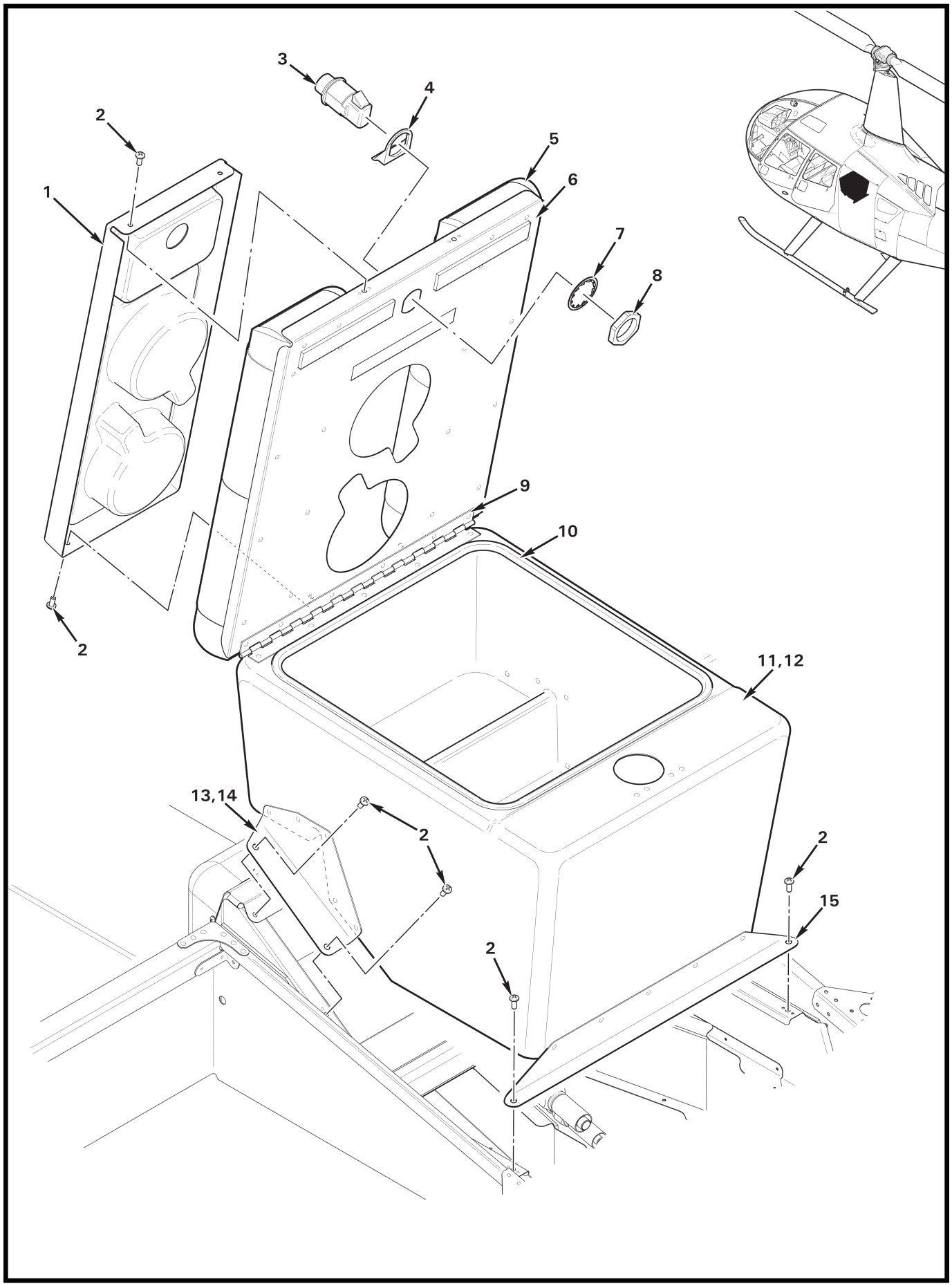
3
4
2
5
1
6
7
8
9
10
2
11,12
13,14
2
2
15
2

FIGURE AND INDEX NUMBER	PART NUMBER	DESCRIPTION	PARTS AVAIL	QTY PER ASSY
		G749-1 AFT CONSOLE INSTALLATION*		
90-79-1	G751-1	Tray	X	1
2	MS27039C0806	Screw	X	10
3	93-303	Latch	X	1
4	—	Tab	O	1
5	G749-3	Cushion Assembly	X	2
6	G750-1	Tray Assembly	X	1
7	—	Lockwasher	O	1
8	—	Nut	O	1
9	G750-6	Hinge	X	1
10	A226-11	Trim	X	A/R
11	G749-2	Console Assembly (Incl items 1, 2 [4], 3 thru 10, and 12 thru 14)	X	1
12	G752-1	Box	X	1
13	G750-3	Bracket (LH)	X	1
14	G750-4	Bracket (RH, not shown)	X	1
15	G750-5	Angle	X	1

NOTES * Replaces F932-1 back rest assembly, and F931-1 seat assembly; see Figure 25-1.

Intentionally Blank

CHAPTER 92

E.N.G. VERSION

Figure	Title	Page
—	Electronic News Gathering Equipment	92.iv
—	Electronic News Gathering Equipment	92.vi
92-1	A826 FM Transceiver Installation	92.0
92-5	Micro Camera Installation – Windshield	92.4
92-7	Micro Camera Installation – Cabin	92.6
92-9	Micro Camera Installation – Horizontal Stabilizer	92.8
92-11	Micro Camera Controller Installation	92.10
92-13	Remote Transmit Switch Installation	92.12
92-15	G425-1 Wall Assembly Installation	92.14
92-17	C445 Auxiliary Circuit Breaker Panel Installation	92.16
92-21	G448 Aft Monitors Installation	92.20
92-25	G449 Forward Monitors Installation	92.24
92-27	Camera and Gimbal Installation	92.26
92-29	Camera and Gimbal Fairing	92.28
92-31	Laptop and Cable Assembly Installation	92.30
92-33	E003 Auxiliary Box Installation	92.32
92-35	HD Microwave System – Controllers	92.34
92-37	HD Microwave System – Transmitter	92.36
92-39	HD Microwave System – Pod Antenna	92.38
92-41	Transponder Antenna Installation	92.40
92-43	TV and Scanner Antenna Installations	92.42
92-45	Aft Console Assembly	92.44
92-49	FM Transceivers Installation	92.48
92-51	Scanner Installation	92.50
92-53	Talent Lights Installation	92.52
92-57	TV Receiver Provision Installation	92.56
92-61	Geneva Audio – Forward Audio Panels	92.60
92-65	Geneva Audio – Aft Audio Panels	92.64
92-67	Geneva Audio – Digital Router	92.66

CHAPTER 92

E.N.G. VERSION
(cont'd)

Figure	*Title*	*Page*
92-69	Video Components Installation	92.68
92-73	DVR/Monitor Installation	92.72
92-75	G459 Aux Electrical System – Harness Assembly	92.74
92-79	E.N.G. Wire Harness Installation	92.78

Intentionally Blank

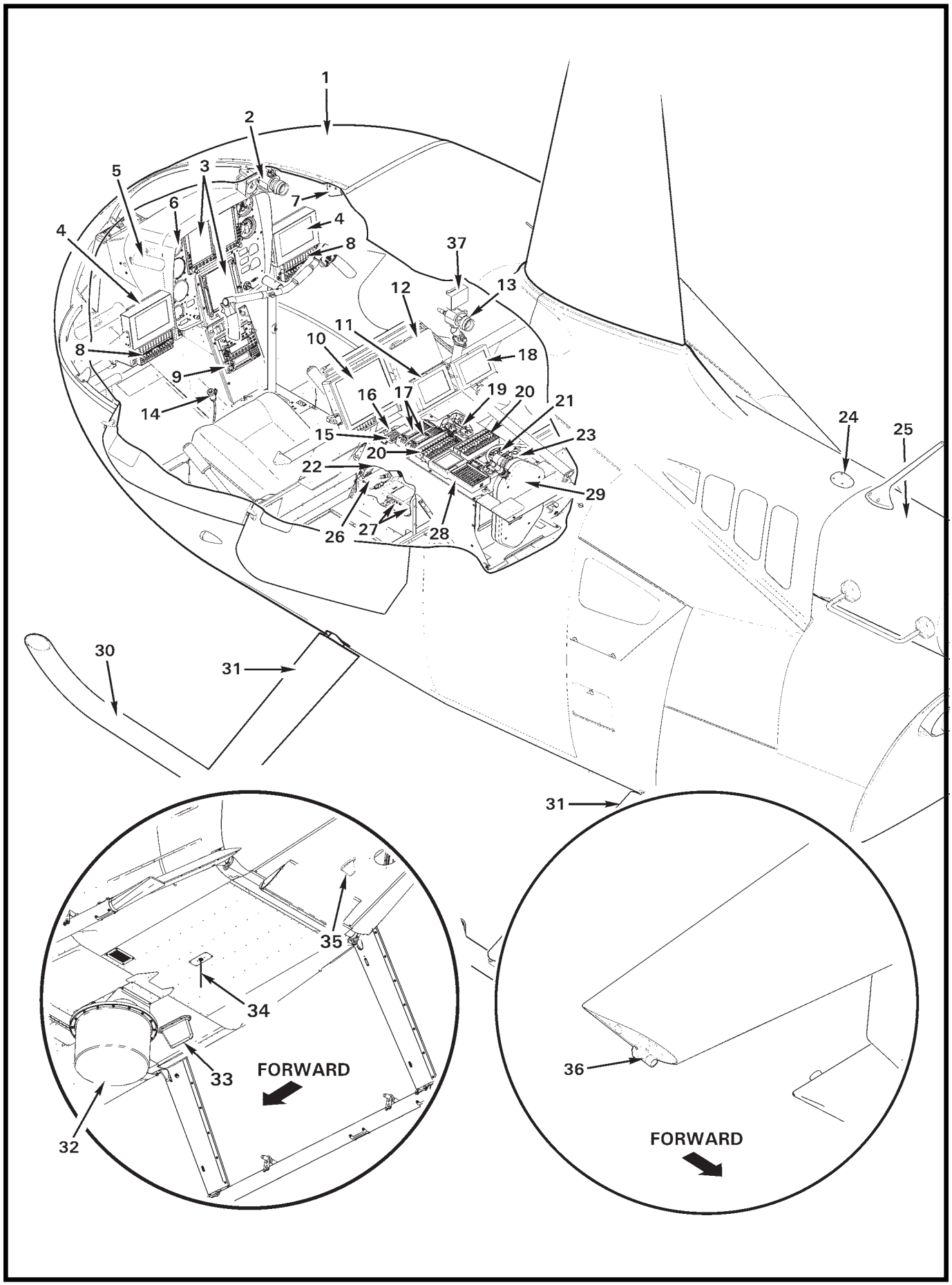
1
2
3
4
5
6
7
8
9
10
11
12
13
14
15
16
17
18
19
20
21
22
23
24
25
26
27
28
29
30
31
32
33
34
35
36
37
FORWARD
FORWARD

ITEM NUMBER	FIGURE	DESCRIPTION
		ELECTRONIC NEWS GATHERING (E.N.G.) EQUIPMENT
1	—	Robinson R66 E.N.G. Helicopter
2	92-5	D097-36 HD Micro Camera (Windshield Bow)
3	97-1	Garmin G500H EFIS
4	92-25	Forward Monitors
5	92-53	Forward Talent Light
6	95-1, 95-23	Airspeed Indicator
7	33-9	G197-13 Window (Spotlight coverage limiter)
8	92-61	Geneva Forward Audio Panels
9	92-1	A826 FM Transceiver
10	92-21	Aft 10-inch Monitor
11	92-21	Aft 5-inch Left Hand Monitor
12	92-73	DVR/Monitor
13	92-7	D097-37 HD Micro Camera (Aft-center Cabin)
14	92-13	Remote Transmit Switches
15	92-69	Video Components
16	92-57	TV Receiver Distribution Amp
17	92-49	FM Transceivers
18	92-21	Aft 5-inch Right Hand Monitor
19	92-11	D097 HD Micro Camera Controllers
20	92-65	Geneva Aft Console Audio Panels
21	92-35	ARC-CM-TX-RX-CR-01 Microwave Controller
22	92-45	Aft Console
23	92-51	Scanner
24	92-39	GPS-1270FW Antenna
25	53-17	C023-24 Tailcone Assembly
26	92-57	F461-4 Cover (aft USB port)
27	92-57	Digital TV Receiver
28	92-35	D558-5 Microwave Controller Assembly
29	92-31	E002-2 Gimbal Camera Laptop Controller
30	32-1	Extended Landing Gear
31	32-5	Landing Gear Fairing
32	92-39	PA16-series Microwave Pod Antenna
33	92-43	Scanner Antenna
34	92-43	TV Tuner Antenna
35	92-41	Transponder Antenna
36	92-9	D097-38 HD Micro Camera (Tail)
37	92-53	Aft Talent Light

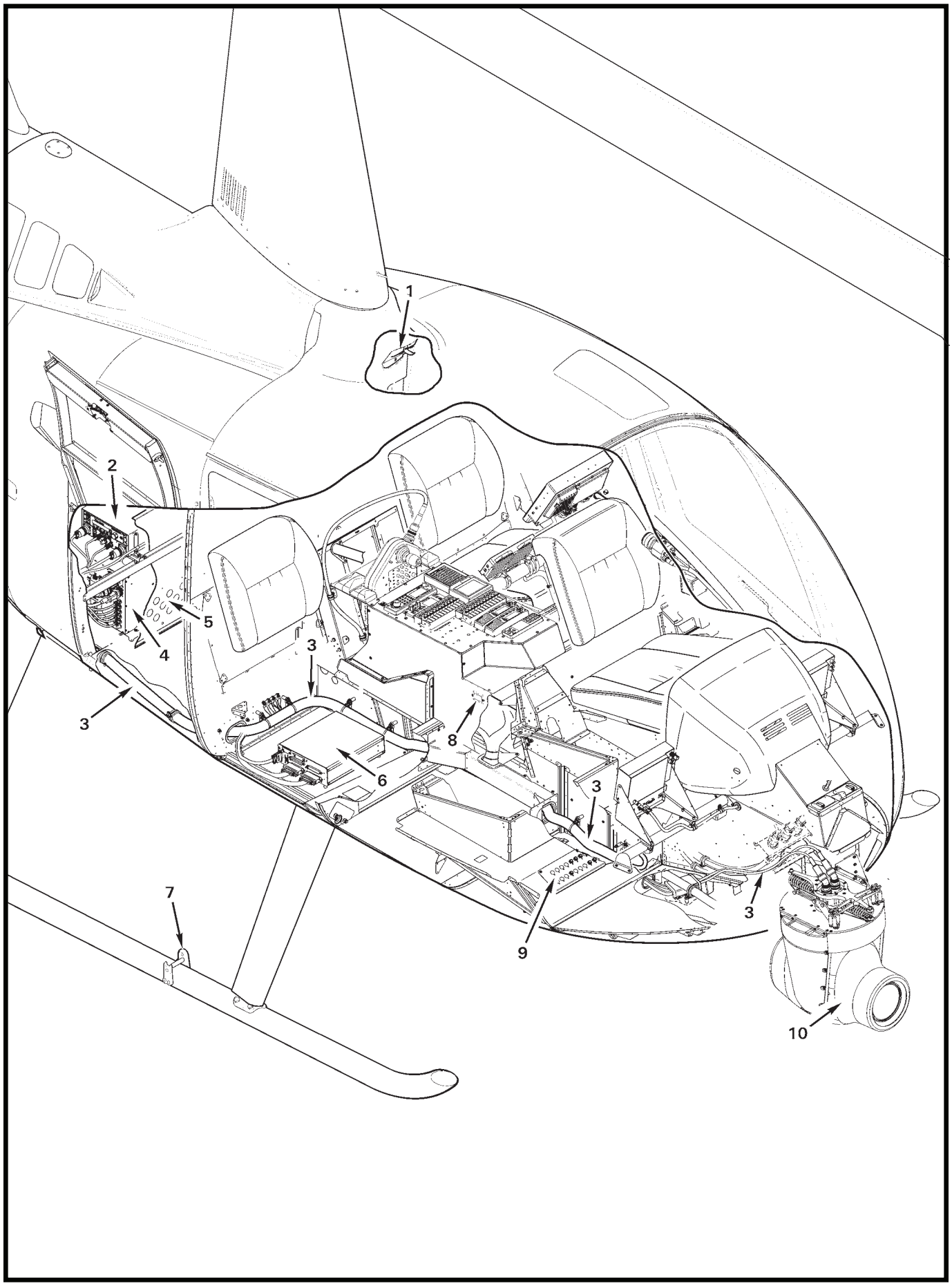
1
2
3
4
5
6
7
8
9
10

ITEM NUMBER	FIGURE	DESCRIPTION
		ELECTRONIC NEWS GATHERING (E.N.G.) EQUIPMENT
1	25-5	F436-1 Cover Assembly (Seat Removed)
2	92-37	CMTX7-LITE Microwave Transmitter
3	92-75	Aux Electrical System Installation
4	92-33	E003-7 Aux Box (video processing)
5	92-15	G425-1 Wall (baggage compartment electronics bay)
6	92-67	Geneva Audio Digital Router
7	32-1	C720-1 Ground Handling Wheel Support
8	92-45	E.N.G. Hourmeter (News Master Time)
9	92-17	G445-2 Aux Circuit Breaker Panel (E.N.G. Equipment)
10	92-27	Gimbal Camera

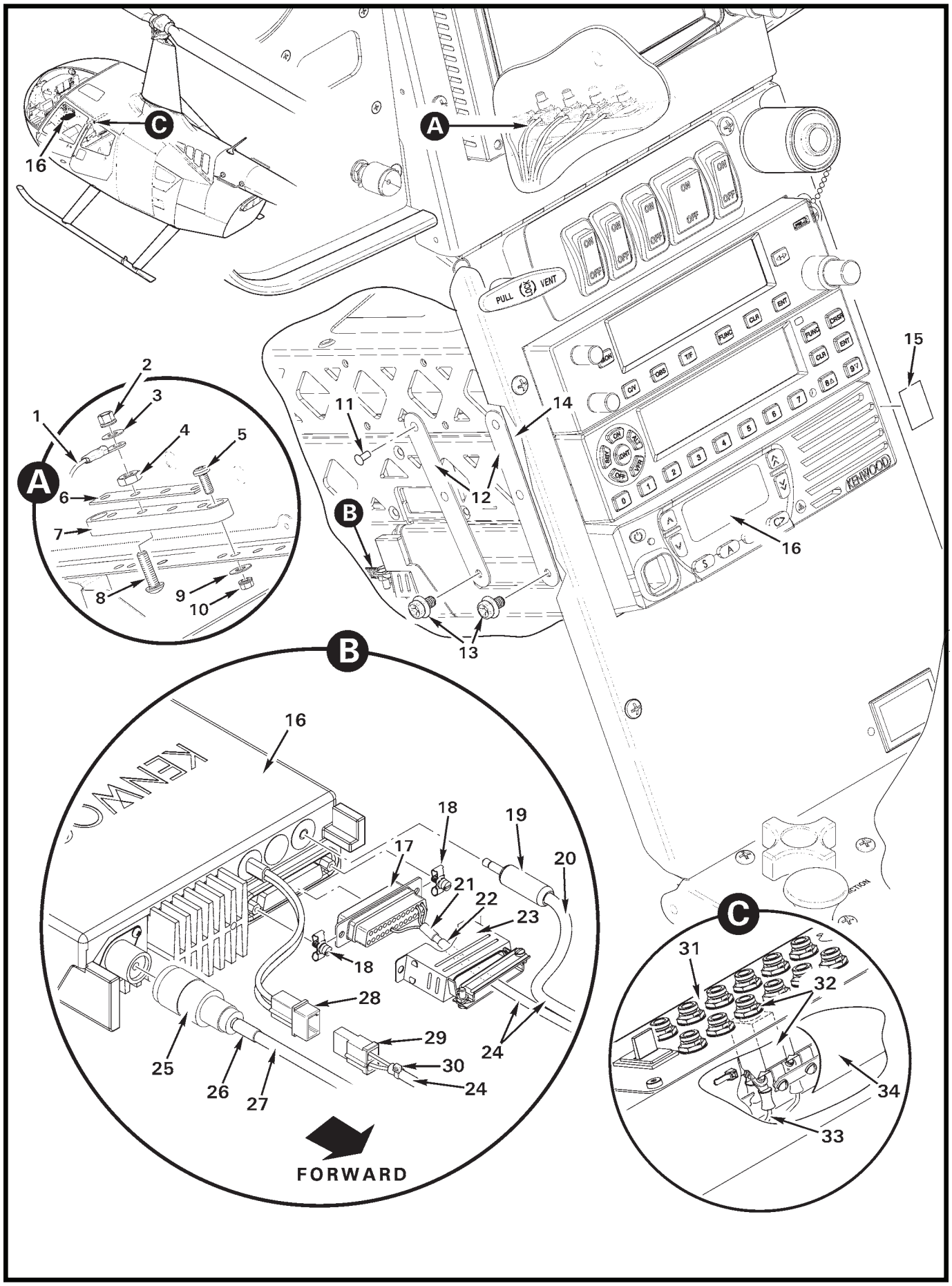
A
B
C
1
2
3
4
5
6
7
8
9
10
11
12
13
14
15
16
17
18
19
20
21
22
23
24
25
26
27
28
29
30
31
32
33
34
PULL VENT
KENWOOD
FORWARD

FIGURE AND INDEX NUMBER	PART NUMBER	DESCRIPTION	PARTS AVAIL	QTY PER ASSY
		A826 FM TRANSCEIVER INSTALLATION		
92-1-1	G459-982*	Wire (ground, Ref)		
2	MS21042L08	Nut	X	4
3	NAS1149FN816P	Washer	X	4
4	B301-8	Nut	X	4
5	MS35206-228	Screw	X	2
6	A448-10	Bus Bar	X	1
7	C448-2	Block Assembly (Ref)		
8	B567-43	Screw	X	4
9	NAS620-6	Washer	X	2
10	MS21042L06	Nut	X	2
11	NAS1097AD3	Rivet	X	8
12	A684-4	Strap	X	4
13	—	Screw	O	4
14	C905-5	Angle (Ref)		
15	G654-11	Decal – “No. 1 FM”	X	1
16	A824-7	Transceiver Assembly (VHF, 136-174 MHz, 30 W; includes items 13 and 28)	X	1
	A824-8	Transceiver (UHF, 450-520 MHz or 400-470 MHz; includes items 13 and 28)	X	1
17	B269-11	Plug	X	1
	G459-984*	Wire (Ref)		
	G459-985*	Wire (white, Ref)		
	G459-985*	Wire (blue, Ref)		
18	B269-31	Screw Lock (male)	X	2
19	750	Plug	X	1
20	G459-987*	Wire (Ref)		
21	B158-4	Heat Shrink	X	A/R
22	B158-4	Heat Shrink (labeled “FM1 X’CVR”)	X	A/R
23	B269-23	Backshell	X	1
24	B266-4	Sleeving	X	A/R
25	83-1SP-1050	Plug	X	1
	83-185	Reducer	X	1
26	B158-4	Heat Shrink (labeled “-821”)	X	A/R
27	G459-821	Wire (F850-31 antenna cable; Ref)		
28	B263-12	Housing	X	1
	B263-1	Pin	X	2

NOTES * See R66 MM §92 wiring diagrams.

Continues

FIGURE AND INDEX NUMBER	PART NUMBER	DESCRIPTION	PARTS AVAIL	QTY PER ASSY
		A826 FM TRANSCEIVER INSTALLATION (Cont'd)		
92-1-29	B263-13	Housing	X	1
	B263-2	Socket	X	2
	G459-907*	Wire (Ref)		
	G459-982*	Wire (Ref)		
30	MS3367-4-0	Ty-rap	X	1
31	G422-2	Panel – Circuit Breaker (aux, Ref; see Figure 92-17)		
32	B297-10	Circuit Breaker (10 amp)	X	1
33	G459-907*	Wire (Ref)		
34	G596-3	Shield (Ref; see Figure 92-17)		

NOTES * See R66 MM §92 wiring diagrams.

Intentionally Blank

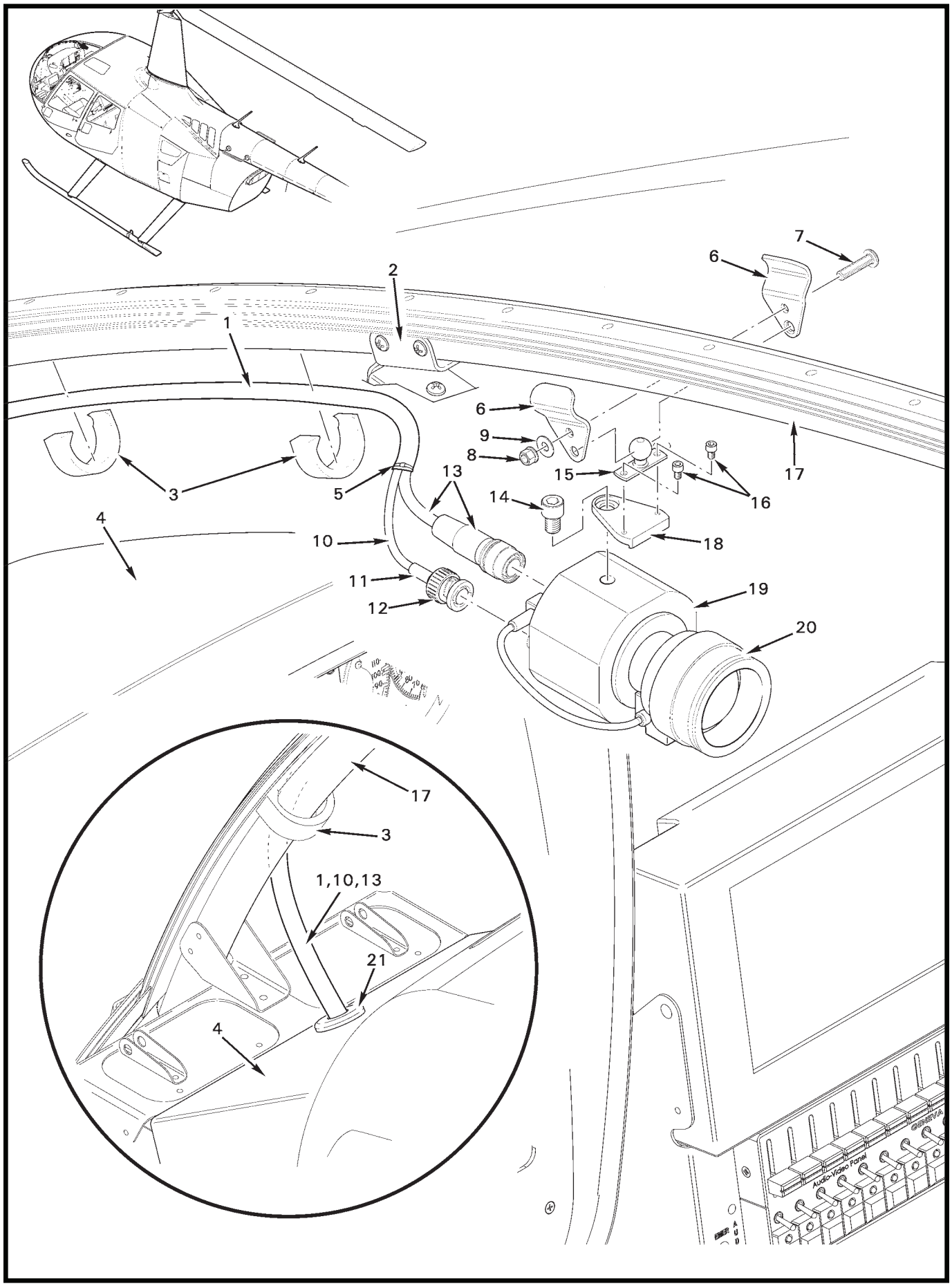
1
2
3
4
5
6
7
8
9
10
11
12
13
14
15
16
17
18
19
20
17
3
1,10,13
21
4
Audio-Video Panel

FIGURE AND INDEX NUMBER	PART NUMBER	DESCRIPTION	PARTS AVAIL	QTY PER ASSY
		MICRO CAMERA INSTALLATION – WINDSHIELD		
92-5-1	B266-4	Sleeving	X	A/R
2	B339-2	Compass Mount (Ref; see Figure 95-45)		
3	D368-9	Clip (5 maximum)	X	A/R
4	—	Console Assembly (Ref, G060 shown)		
5	B268-3	Lacing Tape	X	A/R
6	D368-2	Clamp	X	2
7	MS27039C0811	Screw	X	1
8	MS21042L08	Nut	X	1
9	NAS1149FN816P	Washer	X	1
10	G459-2798	Wire (Ref; see R66 MM §92 wiring diagrams)		
11	B158-3	Heat Shrink	X	A/R
12	2065-11-9	Plug (BNC, or 2025-47-9)	X	1
13	CV505/34510FTCBLE	Cable Assembly	X	1
14	NAS1352-4-6	Screw	X	1
15	D368-8	Mount	X	1
16	NAS1352-04-3	Screw	X	2
17	F090-5	Bow Assembly (Ref)		
18	D368-10	Plate	X	1
19	CV345-CS	Camera (50 Hz)	X	1
	CV345-CSB	Camera (59.94 Hz)	X	1
20	VS-M226-A	Lens	X	1
21	MS35489-11	Grommet	X	1

NOTES

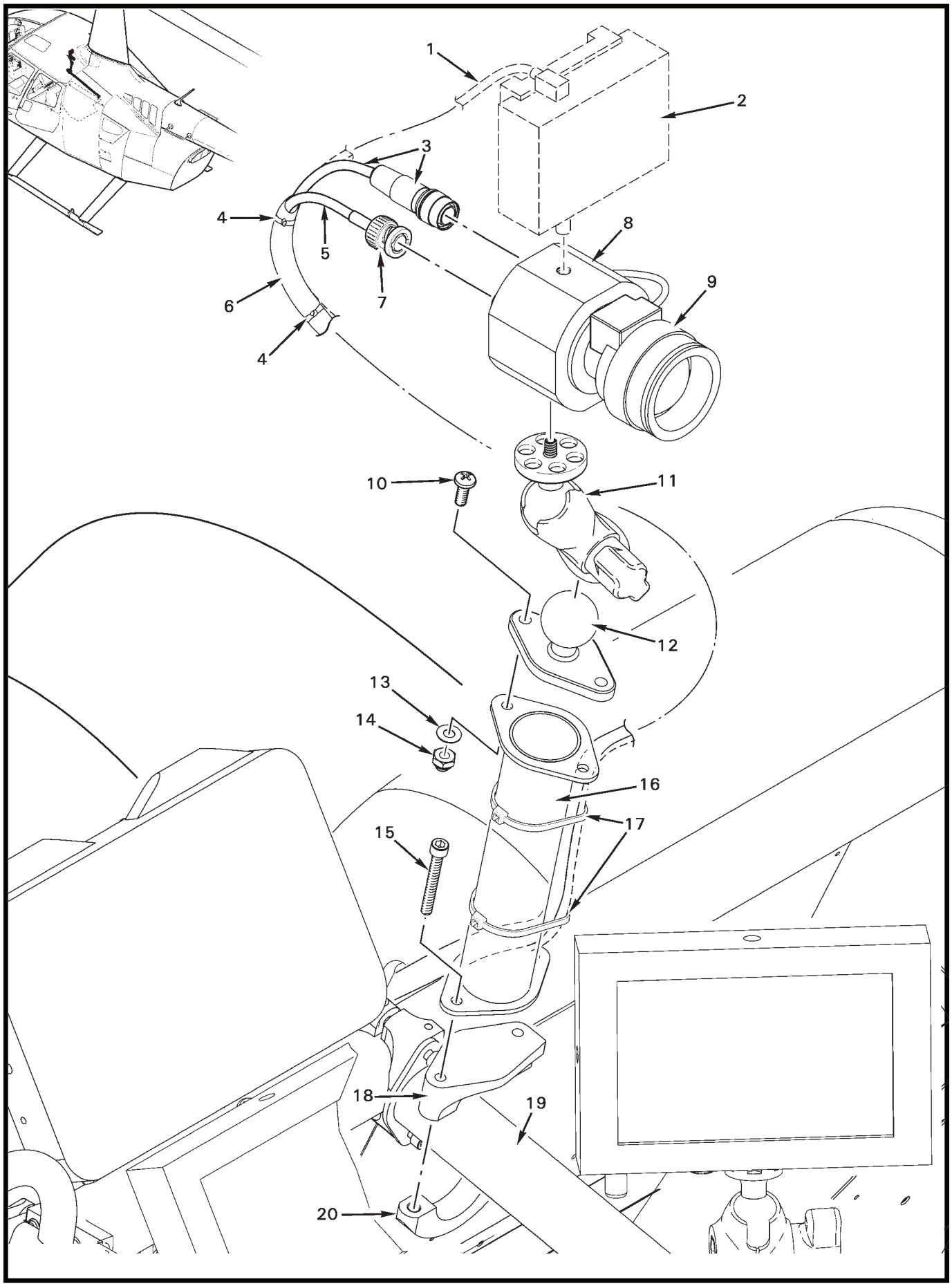
1
2
3
4
5
6
7
4
8
9
10
11
12
13
14
15
16
17
18
19
20

FIGURE AND INDEX NUMBER	PART NUMBER	DESCRIPTION	PARTS AVAIL	QTY PER ASSY
		MICRO CAMERA INSTALLATION – CABIN		
92-7-1	—	Cable (USB, Ref; see Figure 92-53)		
2	ILED-MA	Light (Ref; see Figure 92-53)		
3	C505/345-10FT	Cable Assembly (trim to fit)	X	1
4	B268-3	Lacing Tape	X	A/R
5	G459-756	Wire (Ref; see R66 MM §92 wiring diagrams)		
6	B266-4	Sleeving	X	A/R
7	2065-11-9	Plug (BNC; or 2025-47-9)	X	1
8	CV345-CS	Camera (50 Hz)	X	1
	CV345-CSB	Camera (59.94 Hz)	X	1
9	VS-M226-A	Lens	X	1
10	MS27039C1-09	Screw	X	2
11	RAM-B-366-201U	Arm Assembly	X	1
12	RAM-B-238U	Mount	X	1
13	NAS1351-3-24	Screw	X	2
14	B340-8	Nut	X	2
15	NAS1351-3-24	Screw	X	2
16	G473-5	Weldment	X	1
17	MS3367-7-0	Ty-rap	X	A/R
18	B630-2	Clamp	X	1
19	G473-1	Support Weldment (Ref; see Figure 92-21)		
20	B630-2	Clamp	X	1

NOTES

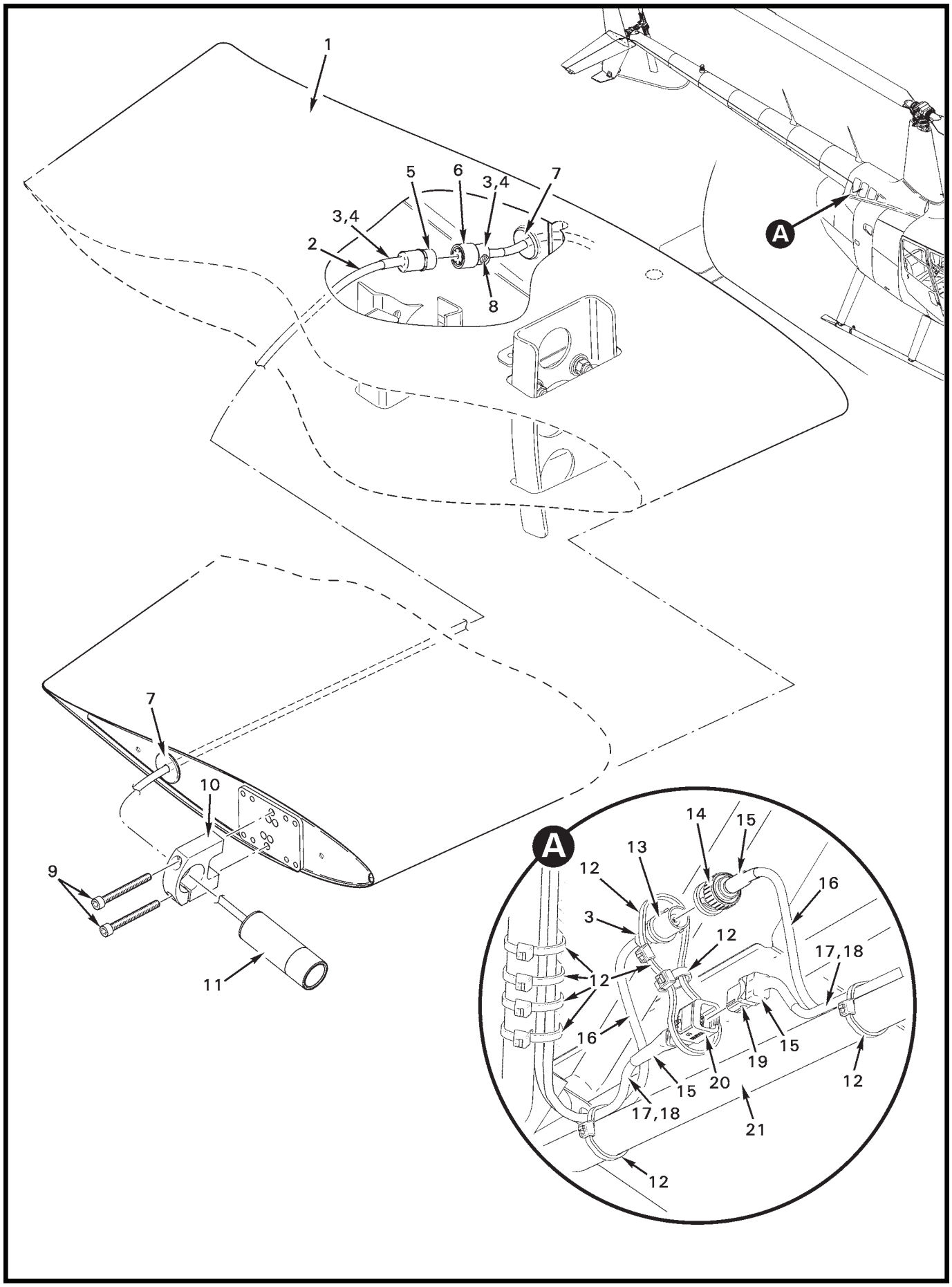
1
2
3,4
5
6
3,4
7
8
A
7
10
9
11
A
14
15
13
12
16
3
12
17,18
12
16
15
19
20
15
12
17,18
21
12

FIGURE AND INDEX NUMBER	PART NUMBER	DESCRIPTION	PARTS AVAIL	QTY PER ASSY
		MICRO CAMERA INSTALLATION – HORIZONTAL STABILIZER		
92-9-1	C044-1	Horizontal Stabilizer (Ref; see Figure 53-25)		
2	CV200	Cable	O	1
3	B158-804	Heat Shrink (around items 5 and 6)	X	A/R
4	B158-808	Heat Shrink (around items 5, 6, and 3)	X	A/R
5	SJS861800P	Receptacle	X	1
6	SJS861700P	Plug	X	1
7	MS35489-134	Grommet	X	2
8	MS20995C20	0.020 in. dia Safety Wire	X	A/R
9	NAS1352-08-24	Screw	X	2
10	D368-11	Clamp	X	1
11	CV200M	Camera (50 Hz; includes item 2)	X	1
	CV200MB	Camera (59.94 Hz; includes item 2)	X	1
12	MS3367-5-0	Ty-rap	X	A/R
13	5413760-8	Jack (BNC)	X	1
14	2065-11-9	Plug (BNC; or 2025-47-9)	X	1
15	B158-6	Heat Shrink	X	A/R
16	C023-757*	Cable (Ref)		
17	C023-2815*	Wire (Ref)		
18	B266-4	Sleeving	X	A/R
19	D269-6	Receptacle	X	1
	B267-3	Terminator	X	1
20	D269-5	Plug	X	1
21	F020-1	Frame Assembly (Ref; see Figure 53-13A)		

NOTES * See R66 MM §92 wiring diagrams.

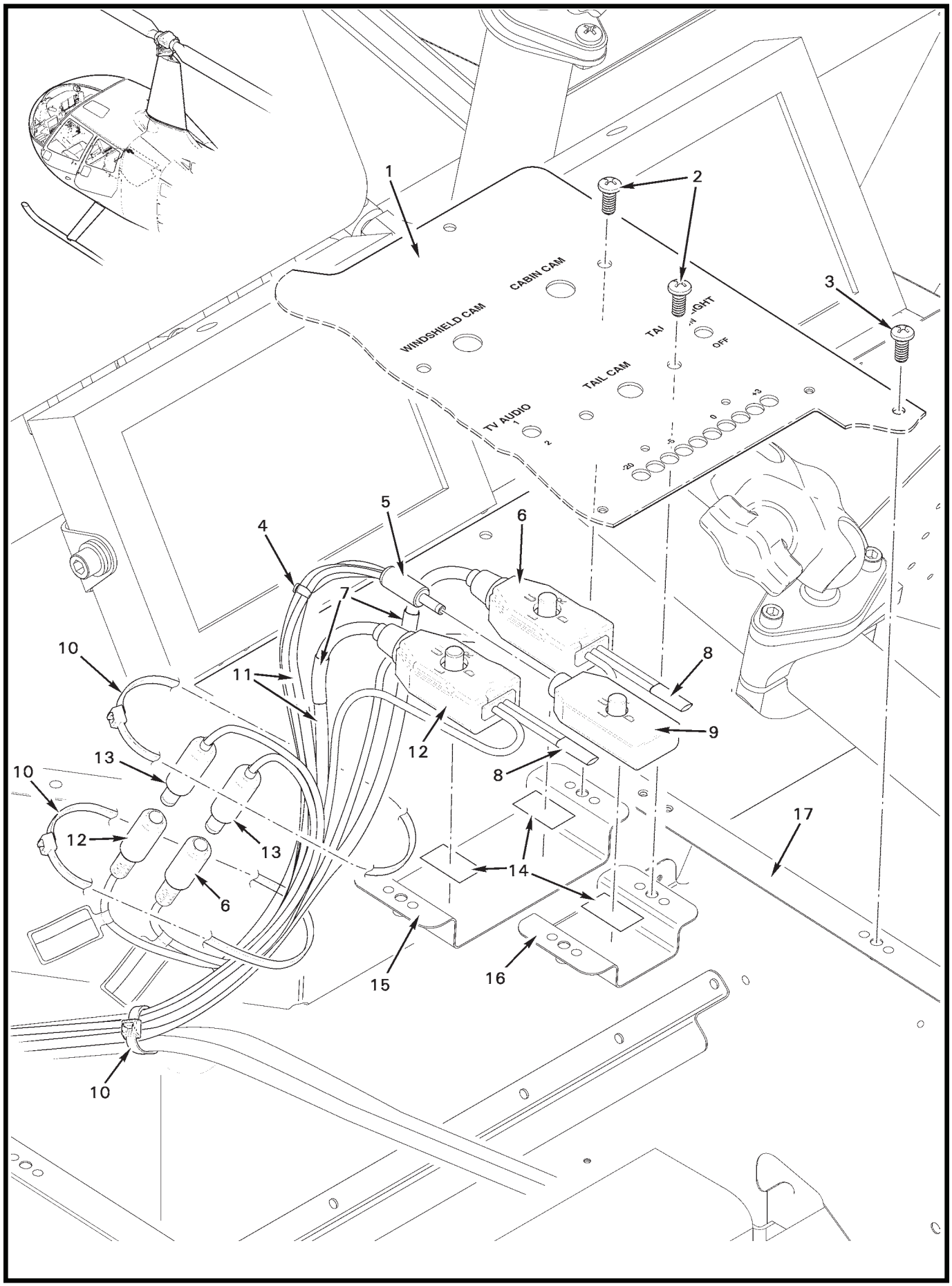

FIGURE 92-11 MICRO CAMERA CONTROLLER INSTALLATION

FIGURE AND INDEX NUMBER	PART NUMBER	DESCRIPTION	PARTS AVAIL	QTY PER ASSY
		MICRO CAMERA CONTROLLER INSTALLATION		
92-11-1	G472	Face (Ref; see Figure 92-45)		
2	MS27039C0805	Screw	X	4
3	MS27039C0806	Screw (Ref; see Figure 92-45)		
4	B268-3	Lacing Tape	X	A/R
5	NES/J135	Plug	X	1
	B267-3	Terminator	X	1
	B267-5	Splice	X	1
	B267-6	Splice	X	1
	B158-1	Heat Shrink	X	A/R
	G459-973*	Wire (Ref)		
	G459-974*	Wire ([2], Ref)		
	G459-2815*	Wire (Ref)		
6	CV505/345-10FTCBLE	Controller/Cable Assembly (“CABIN CAM”; includes camera controller as shown, not detachable)	X	1
7	B158-6	Heat Shrink	X	A/R
8	B158-804	Heat Shrink	X	A/R
9	—	Camera Controller (Ref; supplied with CV200-M/-MB camera. See Figure 92-9.)		
10	MS3367-5-0	Ty-rap	X	A/R
11	B266-4	Sleeving	X	A/R
12	CV505/345-10FTCBLE	Controller/Cable Assembly (“WINDSHEILD CAM”; includes camera controller as shown, not detachable)	X	1
13	760	Plug	X	2
	B158-2	Heat Shrink	X	A/R
	G459-973*	Wire ([2], Ref)		
	G459-974*	Wire ([2], Ref)		
14	A701-7	Tape	X	A/R
15	D344-33	Support Assembly	X	1
16	D344-31	Support Assembly	X	1
17	G470-1	Console Assembly (Aft, Ref; see Figure 92-45)		

NOTES * see R66 MM §92 wiring diagrams.

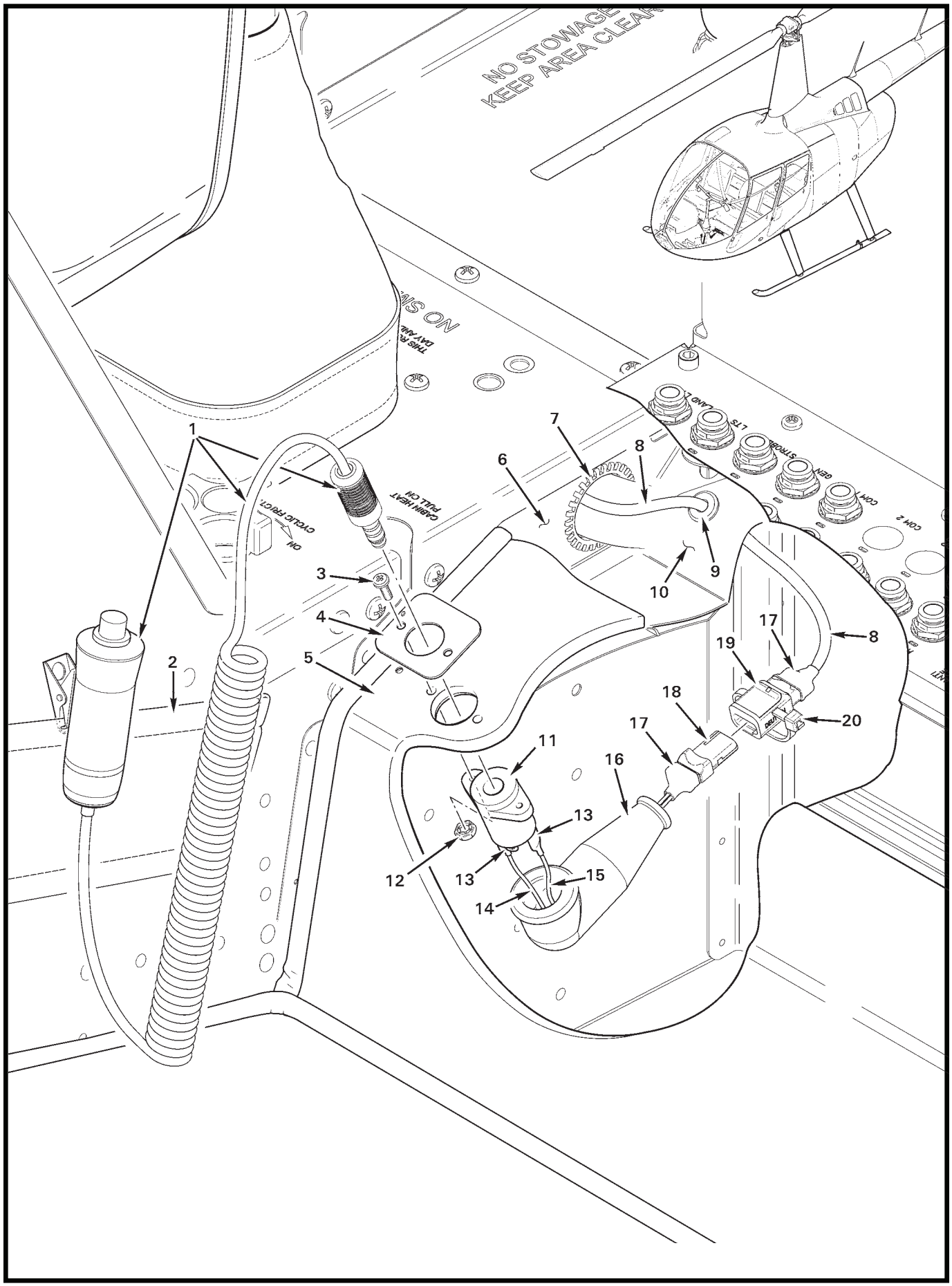
NO STOWAGE
KEEP AREA CLEAR
CYCLIC FRICT.
ON
CABIN HEAT
PULL ON
LANDING
LTS
STROBE
GEN
COM 1
COM 2
1
2
3
4
5
6
7
8
9
10
11
12
13
13
14
15
16
17
17
18
19
20
8

FIGURE AND INDEX NUMBER	PART NUMBER	DESCRIPTION	PARTS AVAIL	QTY PER ASSY
		REMOTE TRANSMIT SWITCH INSTALLATION		
92-13-1	B121-1	Transmit Switch Assembly	X	1
2	A912-6	Pocket Assembly (Ref; see Figure 25-19)		
3	MS35206-215	Screw	X	2
4	G474-13	Plate	X	1
5	—	Carpet (Ref; see Figure 25-15)		
6	F293-1	Keel Panel (LH forward, Ref)		
7	MS21266-1N	Grommet (Ref)		
8	B266-4	Sleeving	X	A/R
9	MS35489-4	Grommet	X	1
10	F492-1	Guard Assembly (Ref)		
11	TJ-120	Jack	X	1
12	B330-2	Palnut	X	2
13	B158-3	Heat Shrink	X	A/R
14	F060-162*	Wire (Ref)		
15	F060-163*	Wire (Ref)		
16	MS25171-2S	Nipple	X	1
17	B158-804	Heat Shrink	X	A/R
18	D269-2	Receptacle	X	1
19	D269-1	Plug	X	1
20	MS3367-4-0	Ty-rap	X	1

NOTES * See R66 MM §92 wiring diagrams

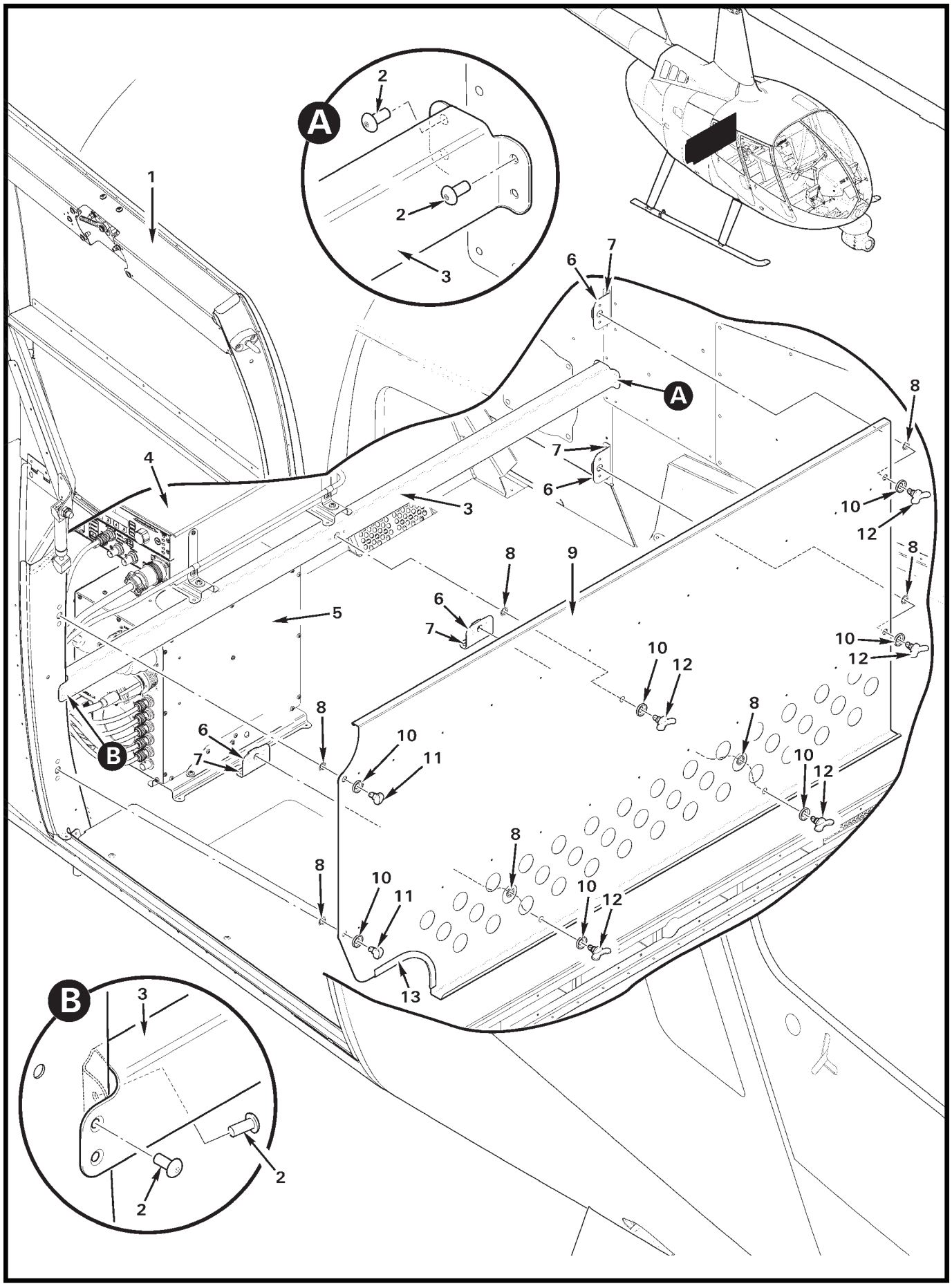
A
2
2
3
1
6
7
A
8
7
4
6
3
10
12
8
9
8
6
5
7
10
12
10
12
8
8
6
10
11
7
B
10
12
8
8
10
11
10
12
13
B
3
2
2

FIGURE AND INDEX NUMBER	PART NUMBER	DESCRIPTION	PARTS AVAIL	QTY PER ASSY
		G425-1 WALL ASSEMBLY INSTALLATION		
92-15-1	G900-1	Door Assembly – Baggage (Ref; see Figure 52-13)		
2	MS20470AD4	Rivet	X	4
3	G431-5	Beam Assembly	X	1
4	CMTX7-LITE	Transmitter (microwave, Ref; see Figure 92-37)		
5	E003-7	Aux Box Assembly (camera, Ref; see Figure 92-33)		
6	G428-2	Angle Assembly	X	4
7	NAS9301-4-02	Rivet	X	8
8	85-34-201-20	Retaining Ring	X	7
9	G428-1	Wall Assembly – Baggage Compartment (Includes items 8 and 10 thru 13)	X	1
10	85-46-101-39	Washer	X	7
11	85-11-140-16	Stud	X	2
12	85-12-140-16	Stud	X	5
13	A226-15	Trim	X	A/R

NOTES

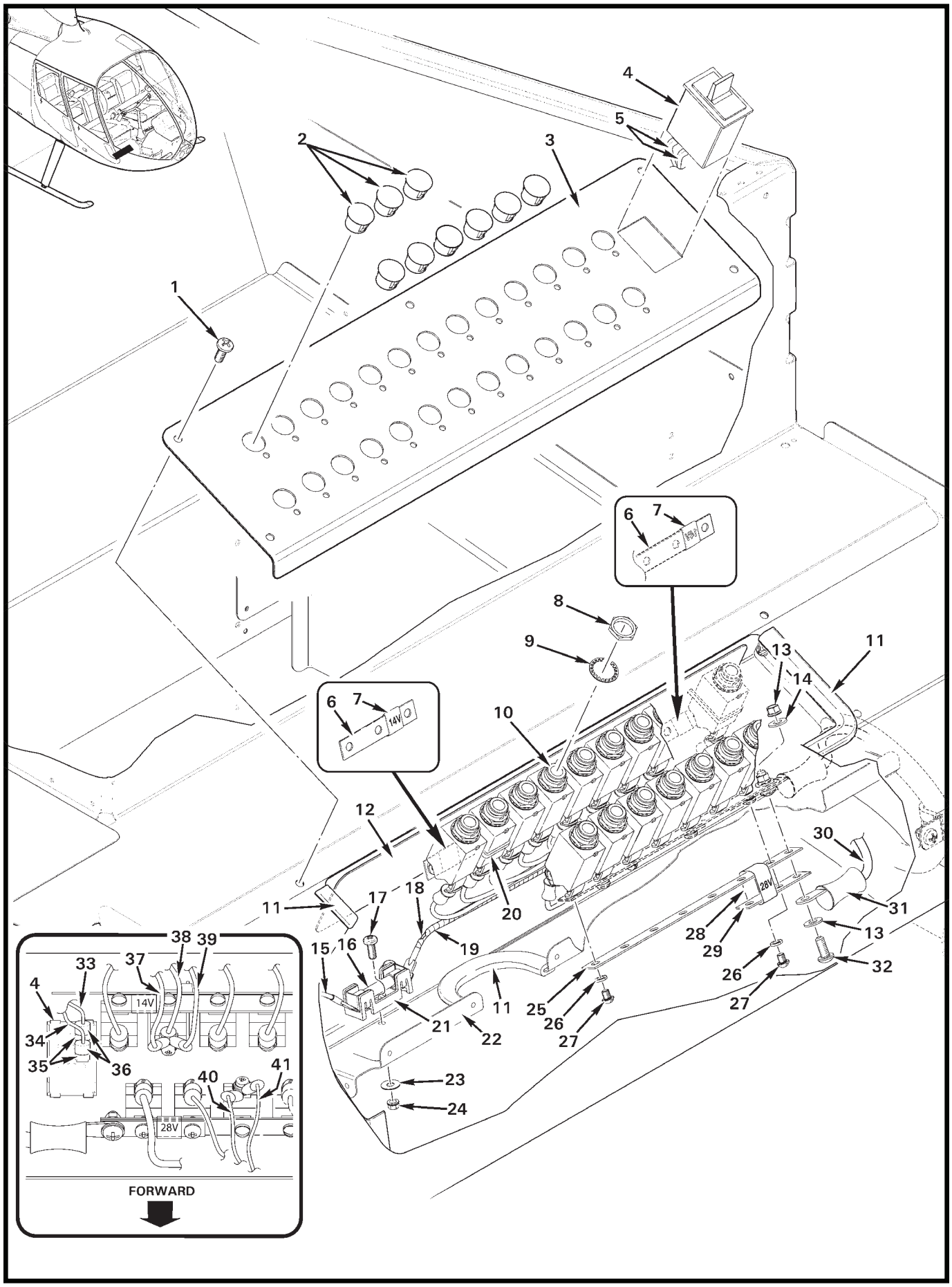
1
2
3
4
5
6
7
8
9
10
11
12
13
14
15
16
17
18
19
20
21
22
23
24
25
26
27
28
29
30
31
32
33
34
35
36
37
38
39
40
41
14V
28V
FORWARD

FIGURE AND INDEX NUMBER	PART NUMBER	DESCRIPTION	PARTS AVAIL	QTY PER ASSY
		C445 AUXILIARY CIRCUIT BREAKER PANEL INSTALLATION		
92-17-1	90337A184	Screw	X	5
2	2633	Hole Plug	X	A/R
3	G422-2	Panel	X	1
4	B184-21	Switch Assembly (“NEWS EQUIP MASTER”)	X	1
5	G459-876*	Wire (Ref)		
	G459-877*	Wire (Ref)		
6	A448-1	Bus Bar (6 breakers)	X	A/R
	A448-4	Bus Bar (3 breakers)	X	A/R
	A448-9	Bus Bar (9 breakers)	X	A/R
	A448-10	Bus Bar (4 breakers)	X	A/R
	A448-14	Bus Bar (8 breakers)	X	A/R
7	B158-6	Heat Shrink (labeled “14V”)	X	A/R
8	—	Nut	O	1
9	—	Washer	O	1
10	B297-2	Circuit Breaker (2-amp; includes items 8, 9, 23, and 24)	X	A/R
	B297-3	Circuit Breaker (3-amp; includes items 8, 9, 23, and 24)	X	A/R
	B297-5	Circuit Breaker (5-amp; includes items 8, 9, 23, and 24)	X	A/R
	B297-10	Circuit Breaker (10-amp; includes items 8, 9, 23, and 24)	X	A/R
	B297-25	Circuit Breaker (25-amp; includes items 8, 9, 23, and 24)	X	A/R
11	A226-15	Trim	X	A/R
12	G596-3	Shield (install using item 18)	X	1
13	MS21042L08	Nut	X	1
14	NAS1149DN832H	Washer	X	1
15	G459-2567	Wire (Ref; to D580-5 Fan Assembly)		
16	AGC-1-R	Fuse (1 amp)	X	1
17	MS35206-228	Screw	X	1
18	G459-1625*	Wire (Ref)		
19	B161-2	Spirap	X	A/R
20	MS3367-4-9	Ty-rap	X	A/R
21	D262-1	Fuse Block	X	1
	B158-2	Heat Shrink	X	A/R
	B158-3	Heat Shrink	X	A/R
22	F492-3	Guard Assembly (Ref)		
23	NAS1149FN616P	Washer	X	1
24	MS21042L06	Nut	X	1

NOTES * See R66 MM §92 wiring diagrams.

Continues

FIGURE AND INDEX NUMBER	PART NUMBER	DESCRIPTION	PARTS AVAIL	QTY PER ASSY
		C445 AUXILIARY CIRCUIT BREAKER PANEL INSTALLATION		
92-17-25	A448-12	Bus Bar (7 breakers)	X	1
26	—	Washer (split)	O	2
27	—	Screw	O	2
28	B158-406	Heat Shrink	X	A/R
29	A448-13	Bus Bar (used as doubler)	X	1
30	G459-874*	Wire (Ref)		
31	B260-15	Terminal	X	1
32	MS27039C0806	Screw	X	1
33	G459-877*	Wire (Ref)		
34	G459-876*	Wire (Ref)		
35	B262-2	Receptacle	X	2
36	B158-3	Heat Shrink	X	A/R
37	G459-2370*	Wire (Ref)		
38	G459-2069*	Wire (Ref)		
39	G459-1875*	Wire (Ref)		
40	G459-2357*	Wire (Ref)		
41	G459-1869*	Wire (Ref)		

NOTES * See R66 MM §92 wiring diagrams.

Intentionally Blank

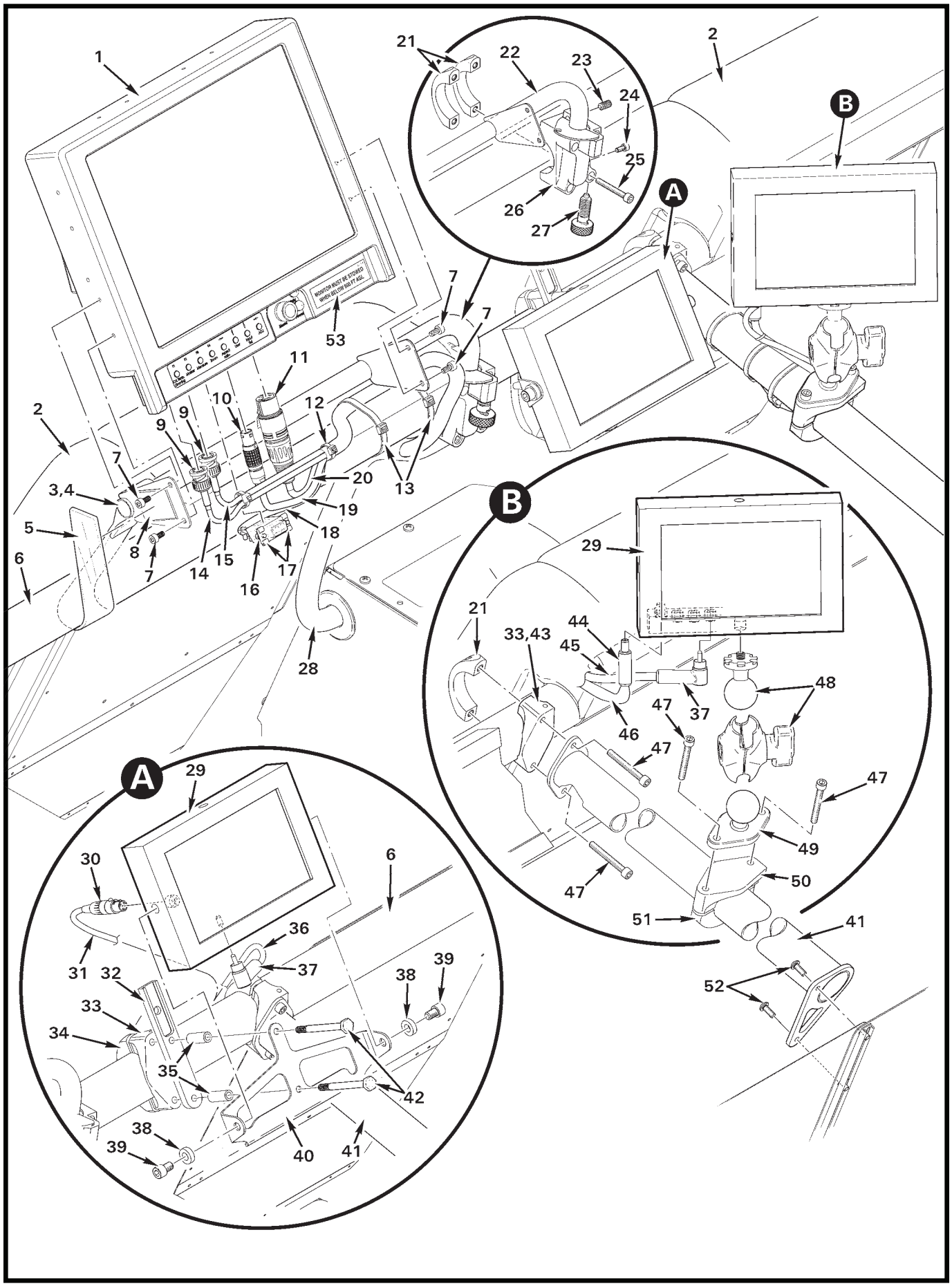
1
2
3,4
5
6
7
8
9
10
11
12
13
14
15
16
17
18
19
20
21
22
23
24
25
26
27
28
29
30
31
32
33
34
35
36
37
38
39
40
41
42
43
44
45
46
47
48
49
50
51
52
53
A
B
MONITOR MUST BE STOWED WHEN BELOW 200 FT AGL

FIGURE AND INDEX NUMBER	PART NUMBER	DESCRIPTION	PARTS AVAIL	QTY PER ASSY
		G448 AFT MONITORS INSTALLATION		
92-21-1	HD10CINEROB	Monitor	X	1
2	F936-1	Back Rest Assembly (Ref)		
3	2643	Hole Plug	X	1
4	B270-1	Adhesive (or B270-18)	X	A/R
5	G478-5	Strap	X	A/R
6	F423-1	Weldment (Ref)		
7	91290A140	Screw	X	4
8	B175-11	Hook Tape	X	A/R
9	2065-11-9	Plug (BNC; or 2025-47-9)	X	2
10	FGG1B308CLAD62	Plug	X	1
	B158-8	Heat Shrink	X	A/R
11	NC4FX	Plug	X	1
	B158-2	Heat Shrink	X	A/R
12	MS3367-4-0	Ty-rap	X	A/R
13	MS3367-7-0	Ty-rap	X	A/R
14	G459-765*	Wire (Ref)		
15	G459-760*	Wire (Ref)		
16	B269-4	Receptacle	X	1
	B269-21	Backshell	X	1
17	B269-31	Screw Lock (Male)	X	2
18	G495-2350*	Wire (Ref)		
19	G459-1622*	Wire (Ref)		
	G459-1623*	Wire (Ref)		
	G459-1624*	Wire (Ref)		
20	G459-897*	Wire (Ref)		
	G459-975*	Wire (Ref)		
21	B630-11	Clamp Assembly	X	2
22	G477-1	Arm Assembly (Incl items 3, 4, 8, 23, 24, 26, and 27)	X	1
23	94495A245	Set Screw	X	1
24	NAS1352-08-6P	Screw	X	1
25	NAS1351-3-26	Screw	X	4
26	G478-1	Block	X	1
27	84935A16	Plunger	X	1
28	G459-1	Harness Assembly (Ref)		
29	VFM-056W	Monitor	X	2

NOTES * See R66 MM §92 wiring diagrams.

Continues

FIGURE AND INDEX NUMBER	PART NUMBER	DESCRIPTION	PARTS AVAIL	QTY PER ASSY
		G448 AFT MONITORS INSTALLATION (cont'd)		
92-21-30	TA4FX	Plug	X	2
31	G459-2800*	Wire (Ref)		
	G459-2802*	Wire (Ref)		
32	G474-3	Bar	X	1
33	B630-12	Clamp	X	1
34	B630-2	Clamp Assembly	X	1
35	C130-22	Spacer	X	2
36	G459-1836*	Wire (Ref)		
37	3502RABAU	Plug	X	2
	B158-804	Heat Shrink (or B158-808)	X	A/R
38	A130-42	Spacer	X	2
39	NAS1352-4-6	Screw	X	2
40	G474-5	Bracket	X	1
41	G473-1	Support Weldment	X	1
42	NAS6603-32	Bolt	X	2
43	B630-10	Clamp Assembly (Incl items 21, 33, and 47 [2])	X	1
44	760	Plug	X	1
45	G459-2799*	Wire (Ref)		
46	G459-1801*	Wire (Ref)		
	G459-1803*	Wire (Ref)		
	B158-2	Heat Shrink	X	A/R
47	NAS1351-3-24	Screw	X	4
48	B630-14	Mount Assembly	X	1
49	RAM-B-238U	Mount	X	1
50	B630-3	Clamp	X	1
51	B630-2	Clamp Assembly	X	1
52	MS27039C0808	Screw	X	2
53	G654-9	Decal – "MONITOR MUST BE STOWED WHEN BELOW..."	X	1

NOTES * See R66 MM §92 wiring diagrams.

Intentionally Blank

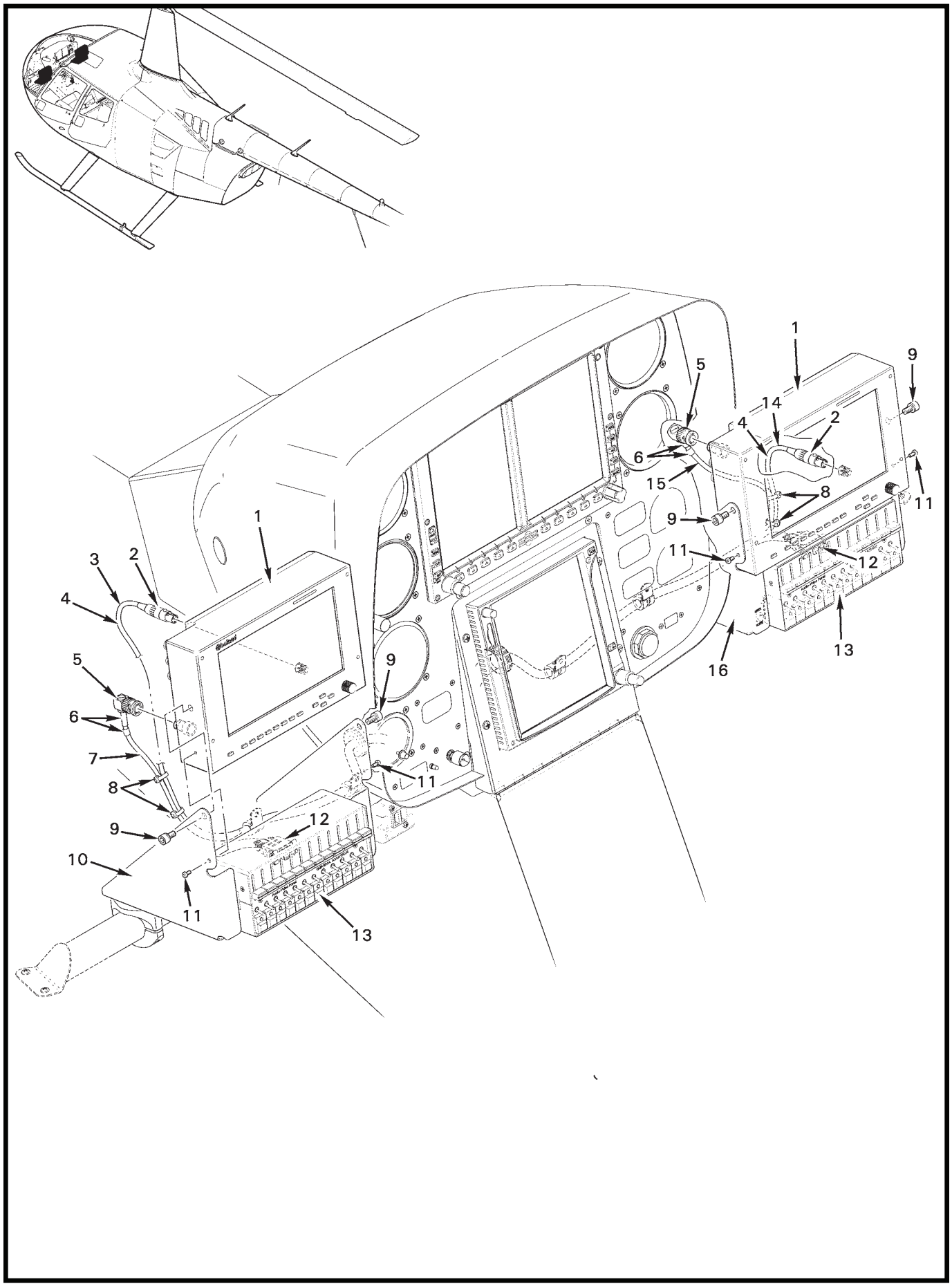

FIGURE 92-25 G449 FORWARD MONITORS INSTALLATION

FIGURE AND INDEX NUMBER	PART NUMBER	DESCRIPTION	PARTS AVAIL	QTY PER ASSY
		G449 FORWARD MONITORS INSTALLATION		
92-25-1	BVBO7	Monitor	X	2
2	TA4FX	Plug	X	1
	B158-01	Heat Shrink	X	A/R
3	G459-979*	Wire (Ref)		
	G459-981*	Wire (Ref)		
4	B266-4	Sleeving	X	A/R
5	112588	Plug	X	2
6	B158-6	Heat Shrink	X	A/R
7	G459-780*	Wire (Ref)		
8	MS3367-5-0	Ty-rap	X	A/R
9	91251A535	Screw	X	4
10	G474-14	Bracket Assembly (Co-Pilot, Ref; see Figure 92-61)		
11	93070A061	Screw	X	4
12	B269-21	Backshell (Ref; see Figure 92-61)		
13	G11431-00102-1	Audio Panel (Ref; see Figure 92-61)		
14	G459-978*	Wire (Ref)		
	G459-980*	Wire (Ref)		
15	G459-779*	Wire (Ref)		
16	G474-15	Bracket Assembly (Pilot, Ref; see Figure 92-61)		

NOTES * See R66 MM §92 wiring diagrams.

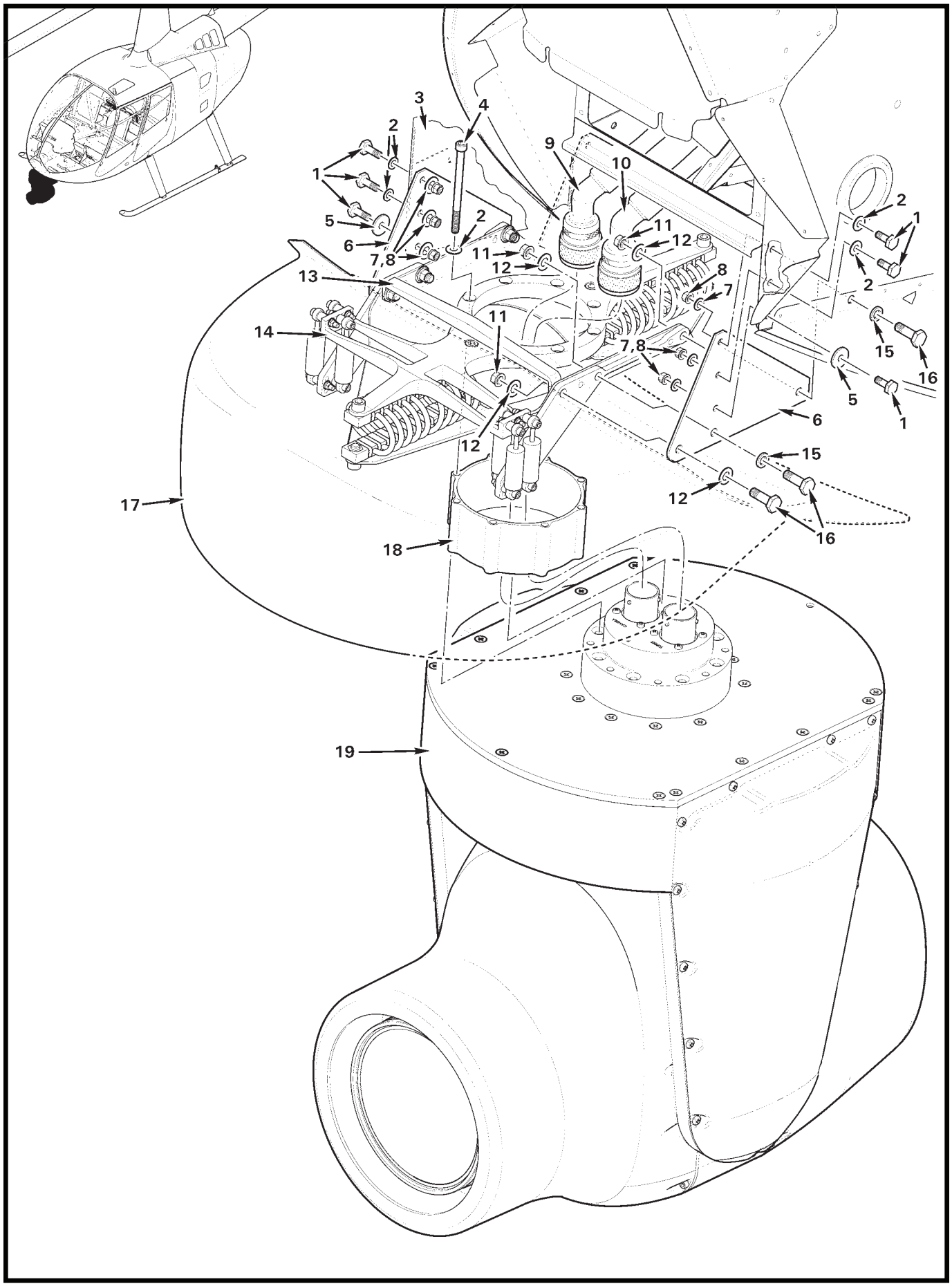
1
2
3
4
5
6
7,8
9
10
11
12
13
14
15
16
17
18
19

FIGURE AND INDEX NUMBER	PART NUMBER	DESCRIPTION	PARTS AVAIL	QTY PER ASSY
		CAMERA AND GIMBAL INSTALLATION		
92-27-1	NAS6603-3	Bolt	X	6
2	NAS1149F0332P	Washer	X	2
3	F033	Console Assembly (Ref)		
4	90128A965	Screw	X	8
5	A141-17	Washer	X	2
6	D349-1	Support	X	2
7	NAS620-10L	Washer	X	6
8	D210-3	Nut	X	6
9	E204-6	Cable (camera)	X	1
10	E195-2	Cable (turret)	X	1
11	D210-4	Nut	X	6
12	NAS1149F0432	Washer	X	8
13	D374-6	Spreader	X	1
14	D385-4	Mount Assembly	X	1
15	A141-11	Washer	X	4
16	NAS6604-6	Bolt	X	6
17	G427-3	Fairing (Ref, see Figure 92-29)		
18	D374-3	Spacer	X	1
19	E801-1	Gimbal Assembly (Ref)		

NOTES

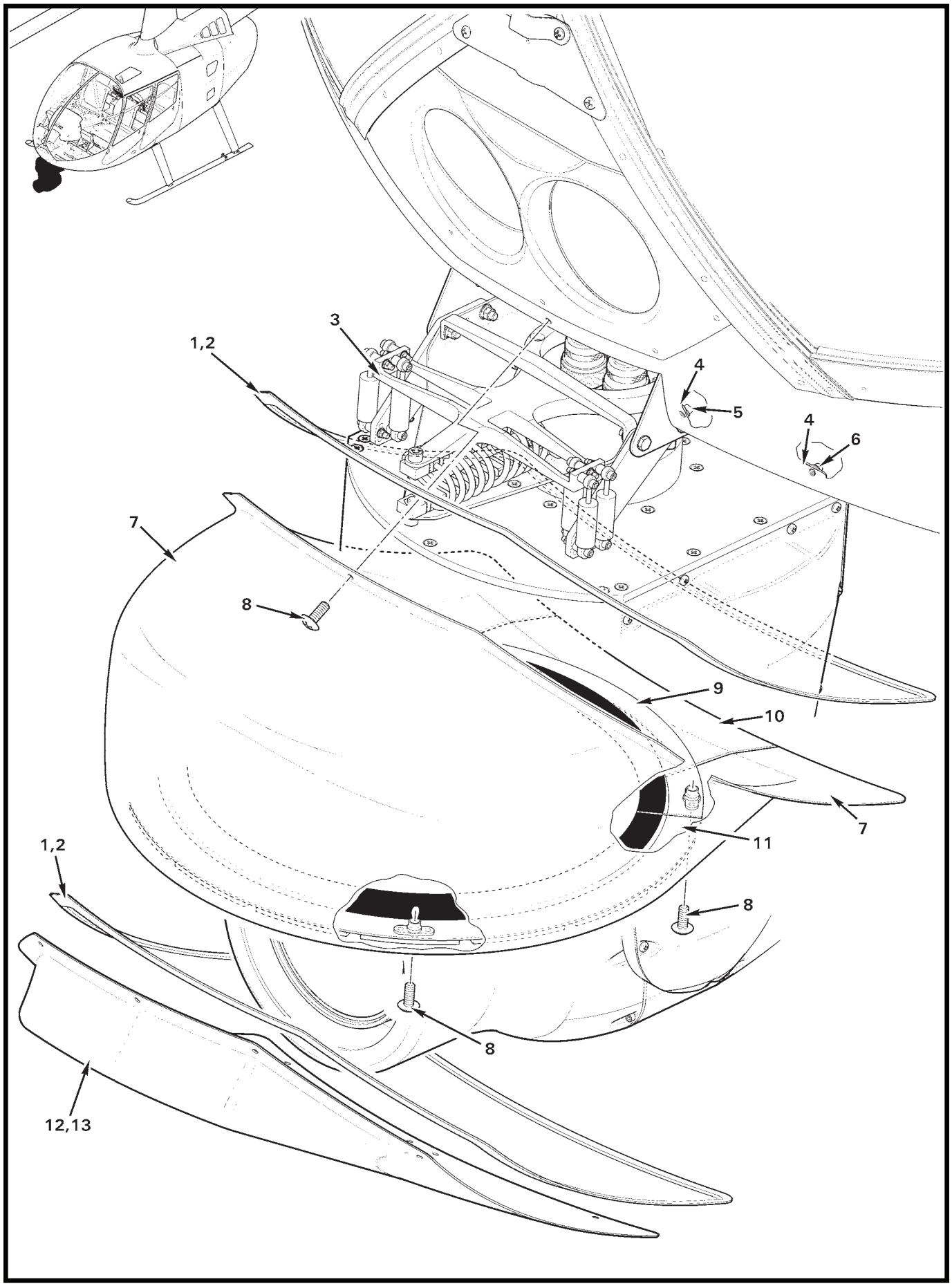
3
1,2
4
5
4
6
7
8
9
10
7
11
1,2
8
8
12,13

FIGURE AND INDEX NUMBER	PART NUMBER	DESCRIPTION	PARTS AVAIL	QTY PER ASSY
		CAMERA AND GIMBAL FAIRING		
92-29-1	A226-3	Seal (install using item 2)	X	A/R
2	B270-4	Sealant (silicone)	X	A/R
3	—	Gimbal Assembly (Ref, see Figure 92-27)		
4	NAS1097AD3	Rivet	X	24
5	MS21071L08	Nutplate	X	2
6	MS21069L08	Nutplate	X	11
7	G427-3	Fairing	X	1
8	B526-6	Screw	X	20
9	D351-4	Seal Assembly	X	1
10	G427-4	Fairing	X	1
11	D351-5	Seal Assembly	X	1
12	G427-2	Cover	O	1
13	D050-13	Cover Assembly (for use when item 3 is removed; includes items 1, 2 and 12)	X	1

NOTES

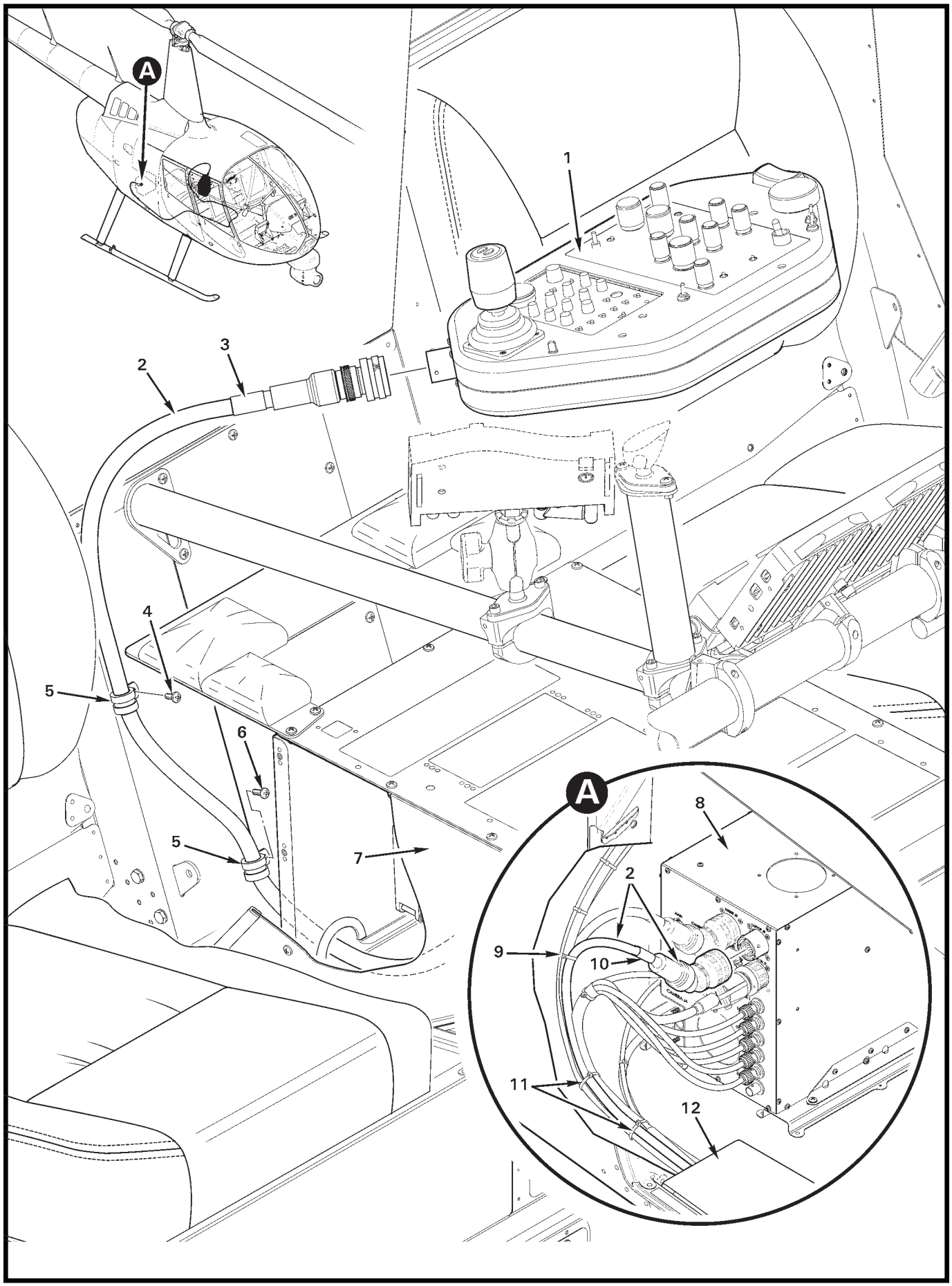
A
1
2
3
4
5
6
5
7
A
8
2
9
10
11
12

FIGURE AND INDEX NUMBER	PART NUMBER	DESCRIPTION	PARTS AVAIL	QTY PER ASSY
		LAPTOP AND CABLE ASSEMBLY INSTALLATION		
92-31-1	E002-2	Laptop Assembly	X	1
2	E199-3	Cable Assembly (Laptop-to-Aux Box Assembly)	X	1
3	B158-8	Heat Shrink (labeled “LAPTOP J6”)	X	A/R
4	MS27039C0806	Screw	X	1
5	MS21919WDG8	Clamp	X	2
6	MS27039C0807	Screw	X	1
7	G470	Console Assembly (aft, Reg)		
8	E003-7	Aux Box Assembly (Ref)		
9	MS3367-4-0	Ty-Rap	X	A/R
10	B158-8	Heat Shrink (labeled “AUX BOX J5”)	X	A/R
11	MS3367-7-0	Ty-Rap	X	A/R
12	G701-1	Guard (Ref)		

NOTES

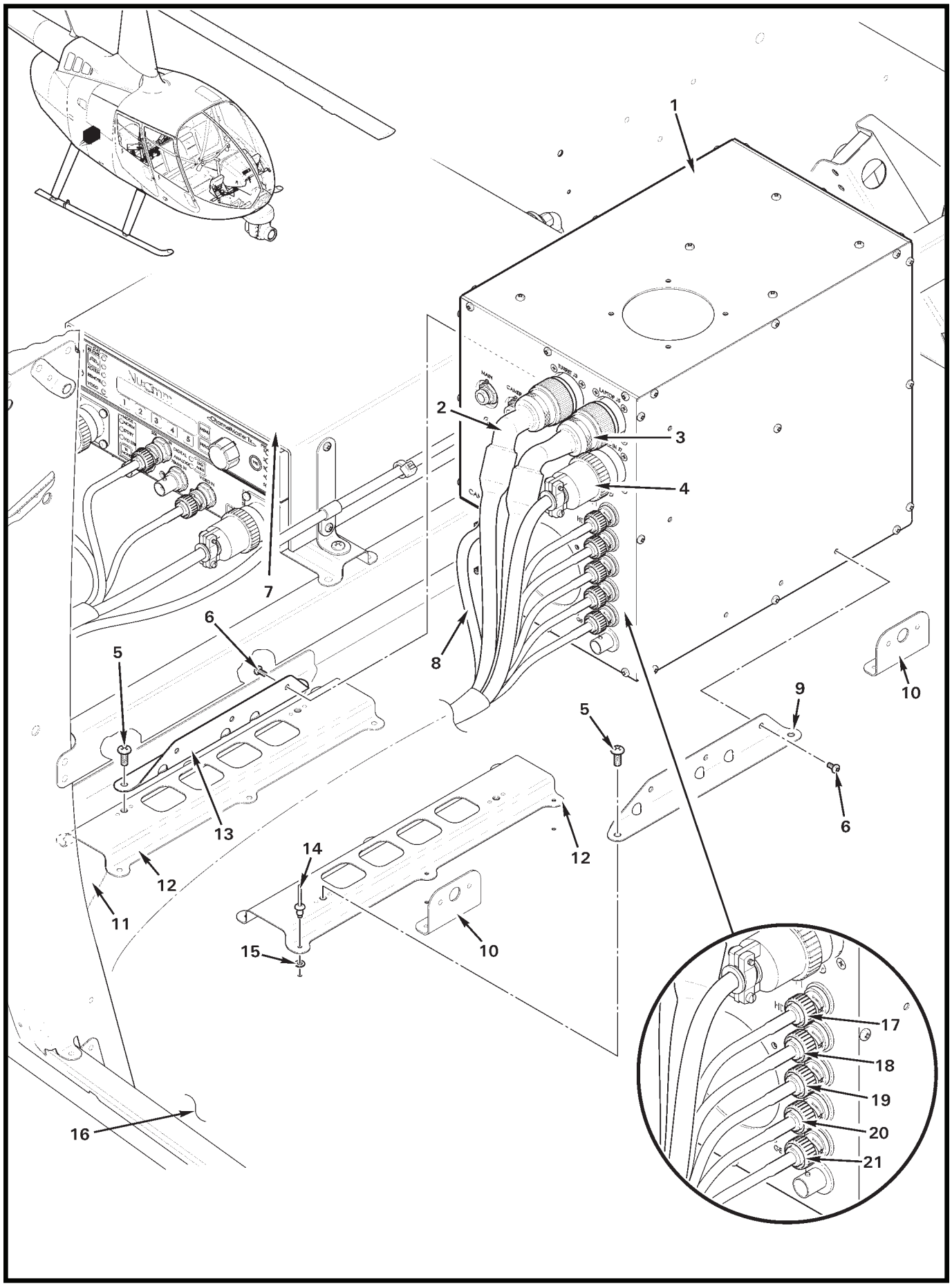

FIGURE 92-33 E003 AUXILIARY BOX INSTALLATION

FIGURE AND INDEX NUMBER	PART NUMBER	DESCRIPTION	PARTS AVAIL	QTY PER ASSY
		E003 AUXILIARY BOX INSTALLATION		
92-33-1	E003-7	Auxiliary Box Assembly	X	1
2	E195-2	Cable Assembly (to camera turret; see Figure 92-27)	X	1
3	E199-3	Cable Assembly (to laptop; see Figure 92-31)	X	1
4	E204-6	Cable Assembly (to camera; see Figure 92-27)	X	1
5	MS27039C0806	Screw	X	4
6	MS35206-213	Screw	X	6
7	CMTX7-LITE	Transmitter (Ref; see Figure 92-37)		
8	E204-6	Cable Assembly	X	1
9	D429-15	Bracket	X	1
10	—	Receptacle (Ref)		
11	G242-4	Doubler (Ref)		
12	G429-1	Support Assembly	X	2
13	D429-15	Bracket	X	1
14	NAS9301B-4-02	Rivet	X	12
15	NAS620-5	Washer	X	11
16	G241-1	Floor Assembly (Ref)		
17	-755	Wire (Ref; HD SDI Out 1 to NXT 430 Video Switcher 1 Video In)		
18	-765	Wire (Ref; HD SDI Out 2, to 10-inch Monitor 2 SDI Video in)		
19	-1622	Wire (Ref; Y, to 10-inch Monitor Y Video in)		
20	-1624	Wire (Ref; R-Y, to 10-inch Monitor Pr Video in)		
21	-1623	Wire (Ref; B-Y, to 10-inch Monitor Pb Video in)		

NOTES

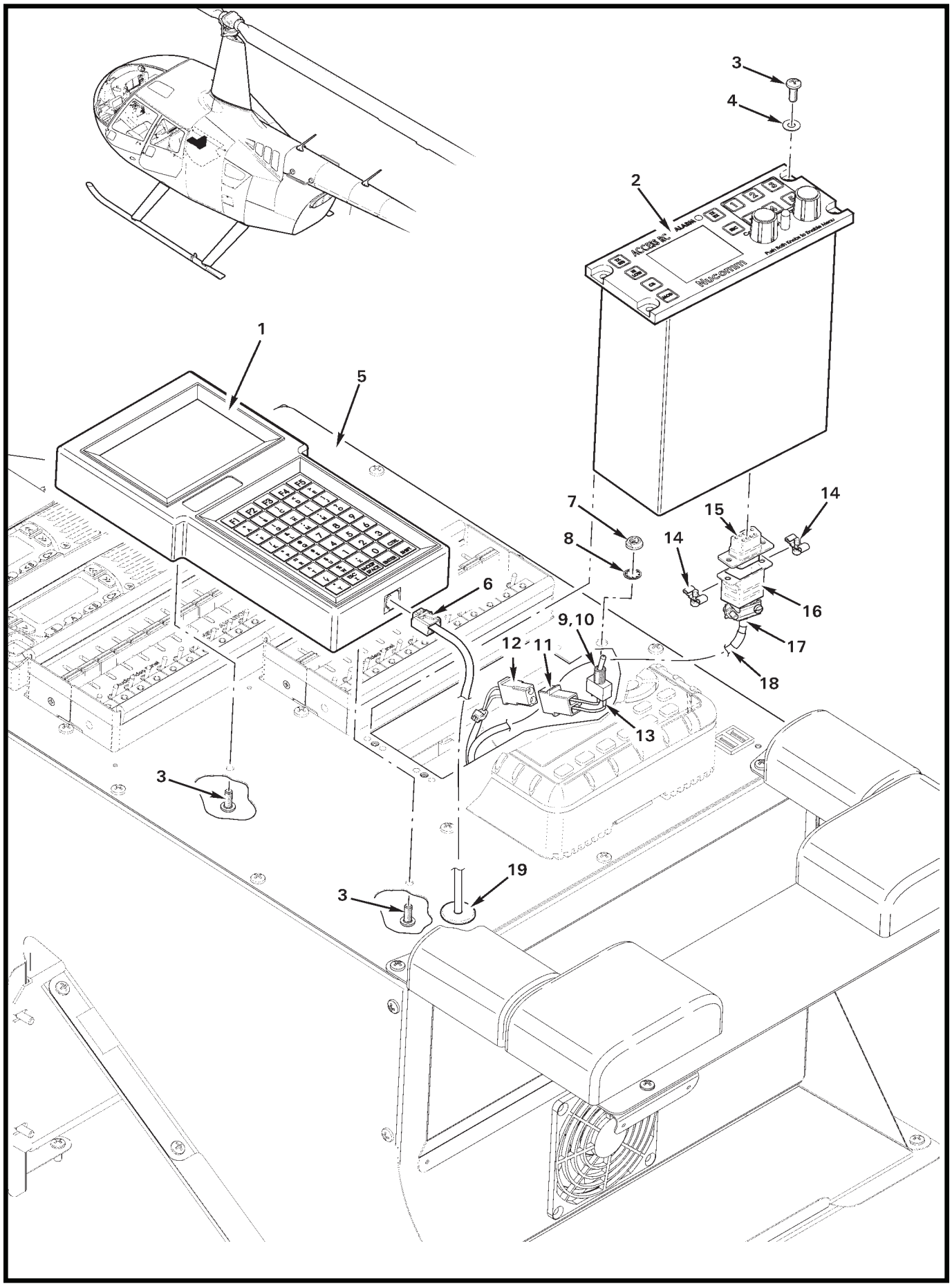
3
4
2
ACCESS INC.
ALARM
Pull left trigger to Enable Hand
Mucomm
1
5
7
8
6
14
15
14
16
17
18
9,10
12
11
13
3
19
3

FIGURE AND INDEX NUMBER	PART NUMBER	DESCRIPTION	PARTS AVAIL	QTY PER ASSY
		HD MICROWAVE SYSTEM – CONTROLLERS		
92-35-1	D588-5	Controller Assembly	X	1
2	ARC-CM-TX-RX-CR-01	Controller	X	1
3	MS27039C0806	Screw	X	6
4	NAS1149FN832P	Washer	X	4
5	G470-1	Console Assembly (aft; Ref)		
6	5-641337-3	Connector	X	1
7	B227-4	Dress Nut	X	1
8	B227-3	Lockwasher	X	1
9	B300-1	Switch Assembly (Incl items 7 and 8)	X	1
10	B049-9	Harness Assembly (Incl items 9, 11, 13, and wires, assembled)	X	1
11	B263-12	Housing	X	1
	B263-1	Pin	X	2
12	B263-13*	Housing	X	1
	B263-2	Socket	X	2
13	B158-1	Heat shrink	X	A/R
14	B269-31*	Screw Lock (male)	X	2
15	B269-4	Receptacle	X	1
16	B269-21	Backshell	X	1
17	B158-4	Heat Shrink	X	A/R
	B158-2	Heat Shrink (around wires, not shown)	X	A/R
18	B266-4	Sleeving	X	A/R
19	MS35489-134	Grommet	X	1

NOTES * Ref, from G459-1 harness assembly.

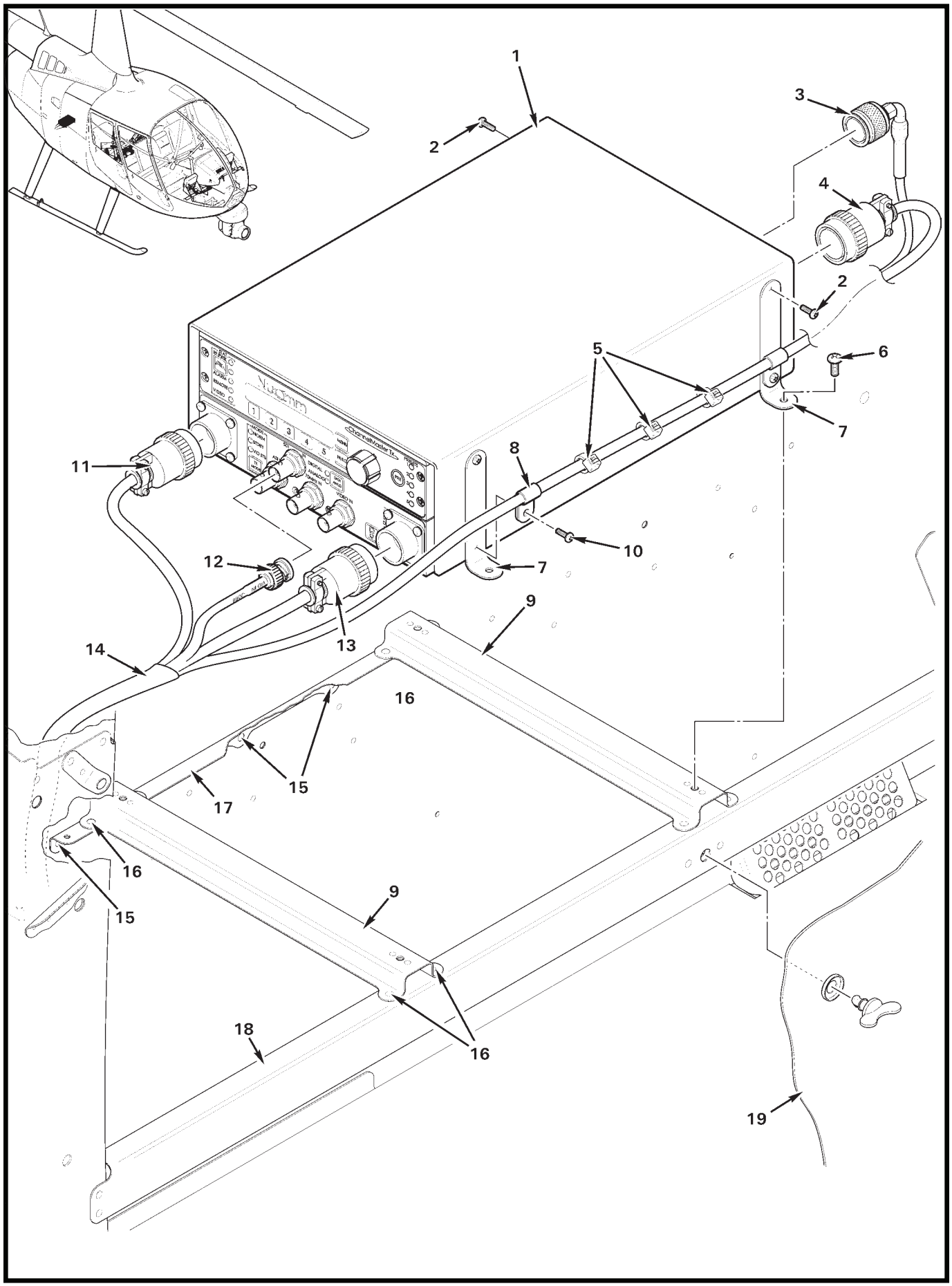
1
2
3
4
2
5
6
7
8
11
10
7
12
13
9
14
16
15
17
16
15
9
18
16
19

FIGURE AND INDEX NUMBER	PART NUMBER	DESCRIPTION	PARTS AVAIL	QTY PER ASSY
		HD MICROWAVE SYSTEM – TRANSMITTER		
92-37-1	CMTX7-LITE	Transmitter	X	1
2	MS35206-215	Screw	X	6
3	D766-2813	Cable Assembly (Includes SMA straight plug, Type "N" 90° plug, heat shrink, and microflex 165 cable.)	X	1
4	MS3116F14-12S	Plug (Ref)		
5	MS3367-4-0	Ty-rap	X	3
6	MS27039C0806	Screw	X	4
7	D429-12	Angle	X	4
8	N-4-BK	Clamp	X	2
9	D429-16	Support Assembly	X	2
10	MS35206-217	Screw	X	2
11	MS3116F14-18S	Plug (Ref)		
12	2065-11-9	Plug (Ref)		
13	MS3116F14-15S	Plug (Ref)		
14	G459-1	Harness Assembly (Ref)		
15	MS20615-3M	Rivet	X	5
16	NAS9301B-4-02	Rivet	X	8
17	G431-4	Angle	X	1
18	G425-2	Beam (Ref)		
19	G425-1	Wall (Ref)		

NOTES

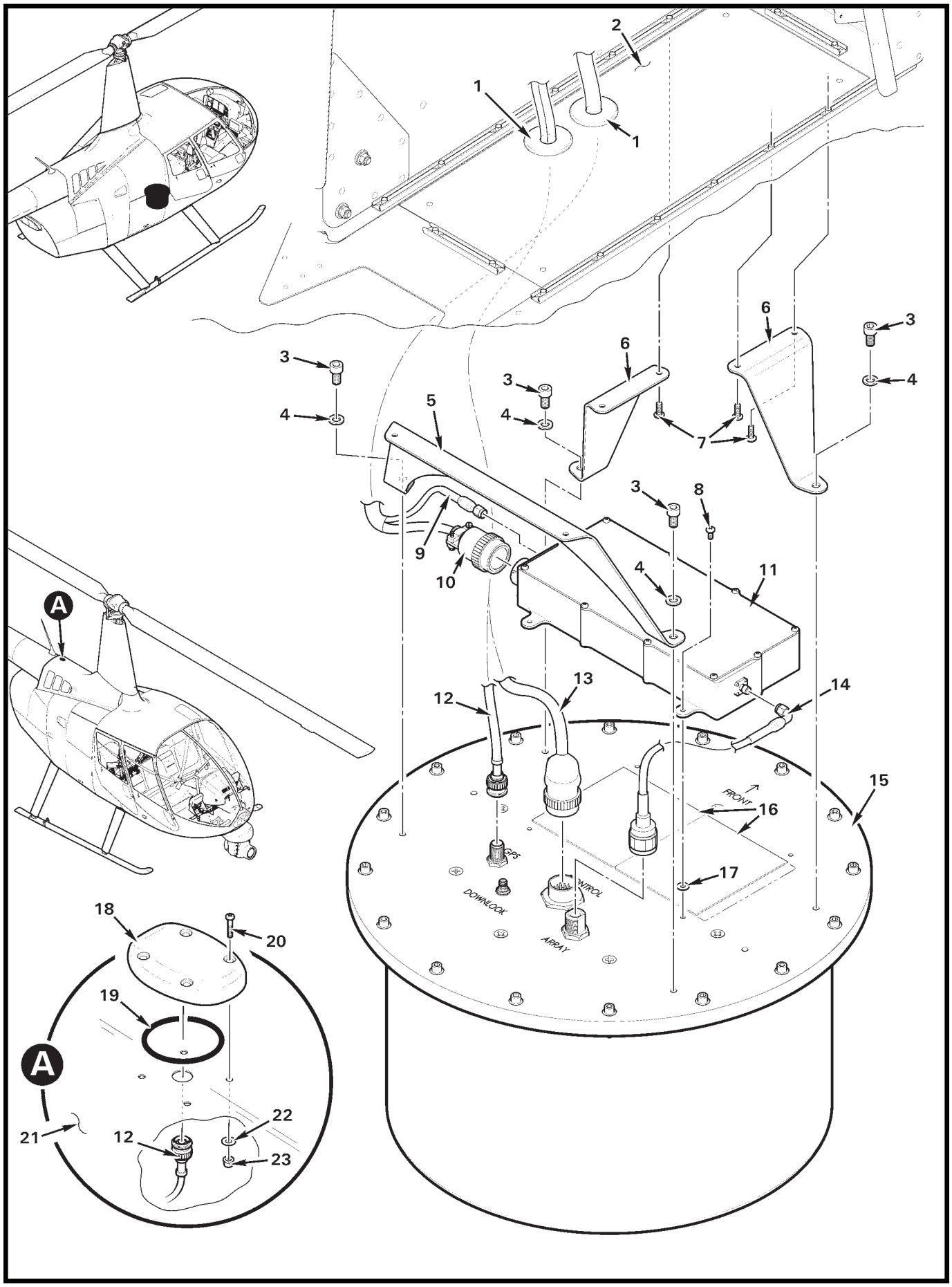

FIGURE 92-39 HD MICROWAVE SYSTEM – POD ANTENNA

FIGURE AND INDEX NUMBER	PART NUMBER	DESCRIPTION	PARTS AVAIL	QTY PER ASSY
		HD MICROWAVE SYSTEM – POD ANTENNA		
92-39-1	MS35489-18	Grommet	X	2
2	F794-2	Panel (Ref)		
3	—	Screw (supplied with item 16)	O	4
4	—	Washer (supplied with item 16)	O	4
5	D586-8	Bracket	X	1
6	D586-7	Bracket	X	2
7	B526-8	Screw	X	6
8	MS35206-227	Screw	X	4
9	D766-2813	Cable Assembly (Includes SMA straight plug, Type "N" 90° plug, heat shrink, and microflex 165 cable.)	X	1
10	MS3116F14-12S	Plug (Ref)		
11	D618-1	Amp Assembly (Ref, D056-1 Installation)		
12	D766-1621	Cable Assembly – GPS (Ref)		
13	D588-4	Cable Assembly (Ref)		
14	D766-2378	Cable Assembly (Includes SMA 90° plug, type "N" straight plug, and microflex 165 cable)	X	4
15	PA16-__	Pod Antenna	X	1
16	GP1500-0.040-02-0404	Thermal Pad	X	2
17	NAS1149FN632P	Washer	X	4
18	GPS-1270FW	GPS Antenna (includes item 19)	X	1
19	—	O-ring	O	1
20	MS35206-232	Screw	X	4
21	F706-1	Cowling (Ref)		
22	NAS1149FN616P	Washer	X	4
23	MS21042L06	Nut	X	4

NOTES

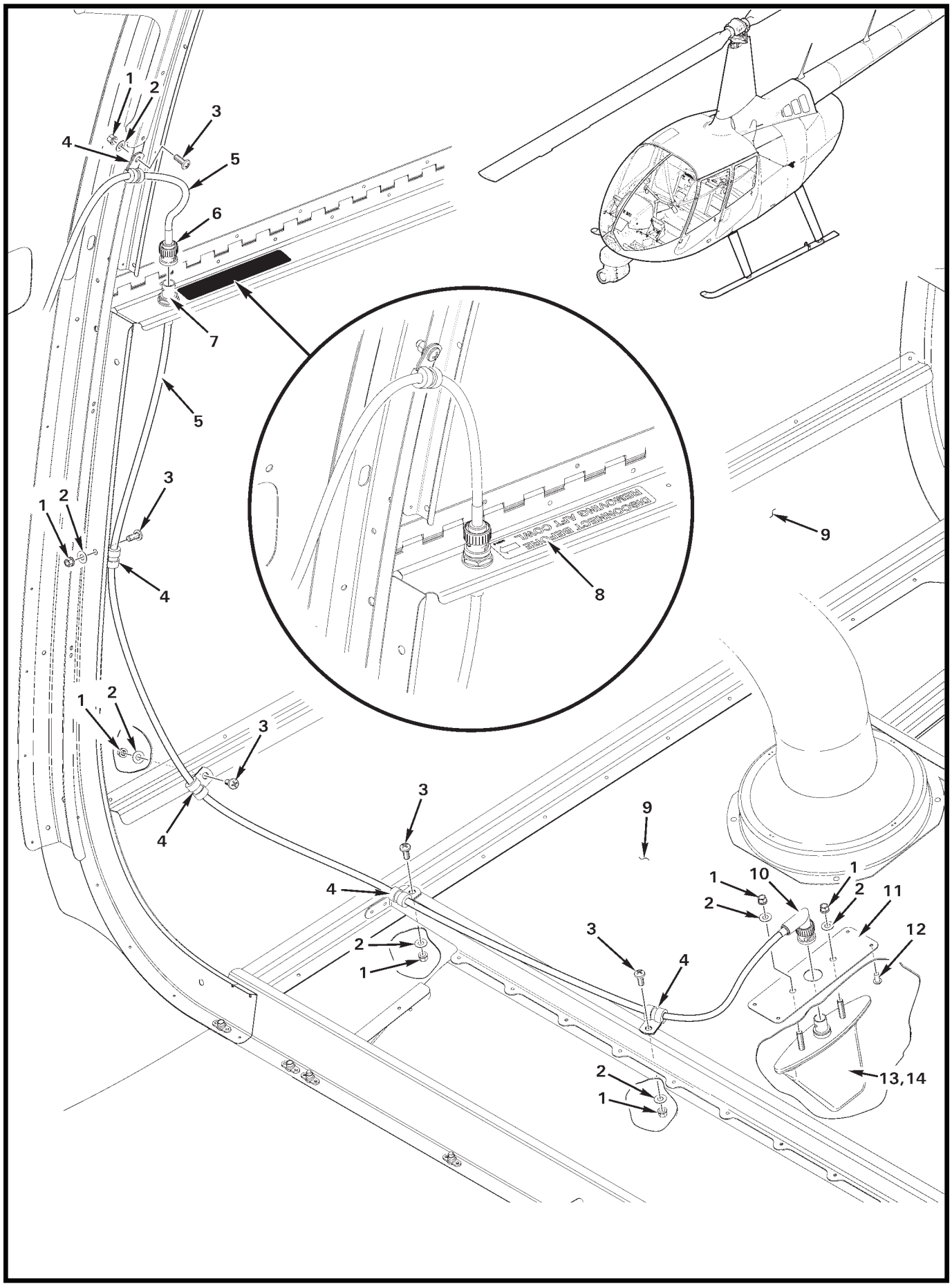

FIGURE 92-41 TRANSPONDER ANTENNA INSTALLATION

FIGURE AND INDEX NUMBER	PART NUMBER	DESCRIPTION	PARTS AVAIL	QTY PER ASSY
		TRANSPONDER ANTENNA INSTALLATION		
92-41-1	MS21042L08	Nut	X	7
2	NAS1149FN816P	Washer	X	7
3	MS27039C0806	Screw	X	5
4	MS21919WDG3	Clamp	X	5
5	G457-2817	Cable	X	2
6	5225395-6	Plug	X	1
7	5225395-6	Bulkhead Jack	X	1
8	G654-8	Decal – "DISCONNECT BEFORE REMOVING AFT COWL"	X	1
9	G040	Cowling Assembly – Aft (Ref)		
10	5225973-4	Right Angle Plug	X	1
11	B322-12	Doubler	X	1
12	MS20470AD4	Rivet	X	4
13	CI 105-16	Antenna – Transponder (install using item 14)	X	1
14	B270-1	Sealant	X	A/R

NOTES

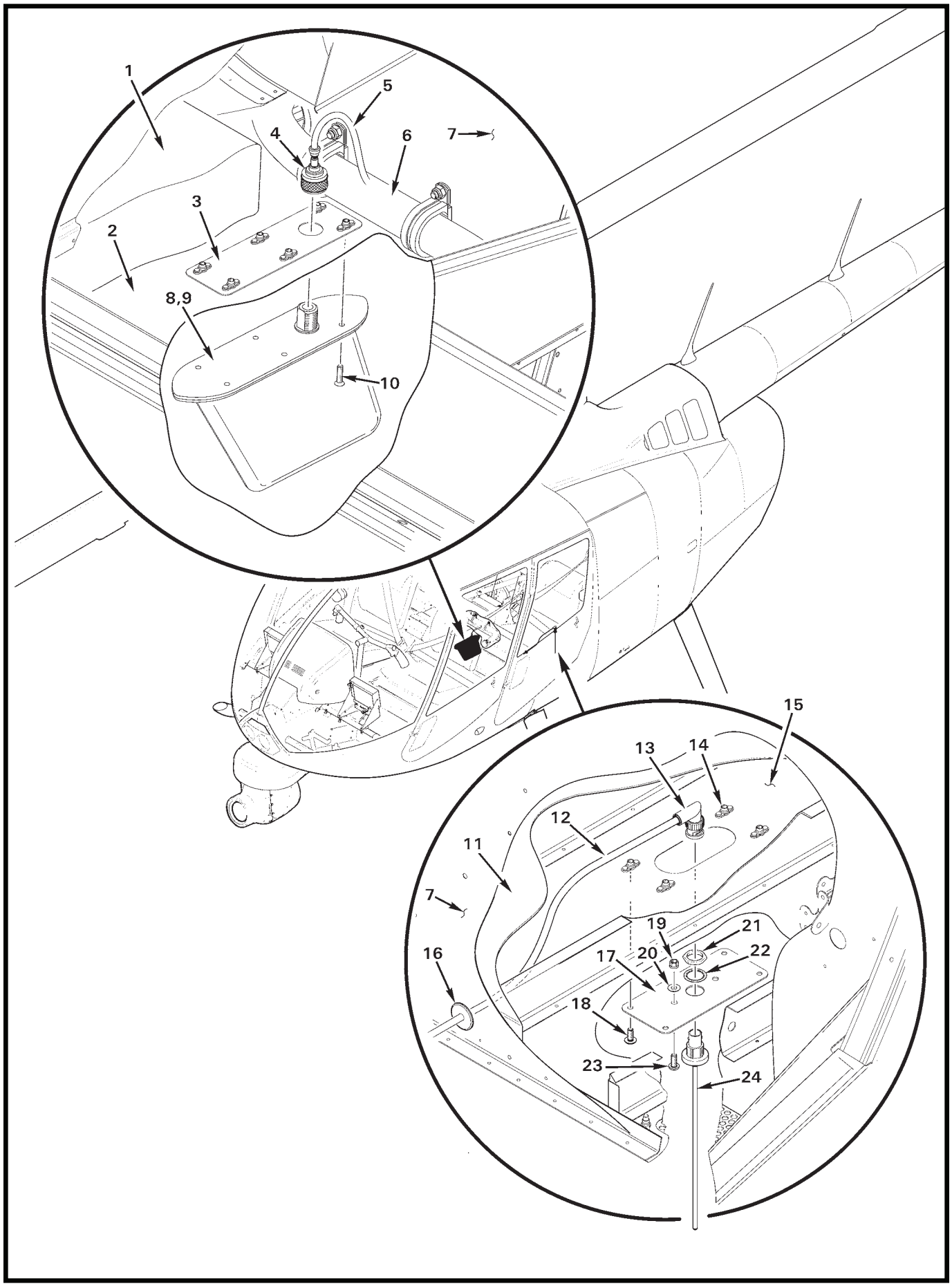
1
2
3
4
5
6
7
8,9
10
11
12
13
14
15
16
17
18
19
20
21
22
23
24

FIGURE AND INDEX NUMBER	PART NUMBER	DESCRIPTION	PARTS AVAIL	QTY PER ASSY
		TV AND SCANNER ANTENNA INSTALLATIONS		
92-43-1	G13000	Router (audio, Ref)		
2	F387-1	Skin (belly, aft; Ref)		
3	B322-14	Plate Assembly	X	1
4	5225966-1	Plug	X	1
5	G459-1219	Cable (Ref)		
6	G459	Harness Assembly (Ref)		
7	G259-1	Bulkhead (lower, Ref)		
8	CI 285	Antenna – UHF (400-960 MHz; install using item 9)	X	1
9	B270-1	Sealant	X	1
10	MS24694-C7	Screw	X	6
11	G241-1	Floor (baggage compartment, Ref)		
12	G459-2811	Cable (Ref)		
13	5221402-2	Plug	X	1
14	MS21069L08K	Nutplate (Ref)		
15	G917-1	Skin (belly, Ref)		
16	MS35489-5	Grommet	X	1
17	B322-11	Plate (install using item 9)	X	1
18	B526-6	Screw	X	4
19	MS21042L08	Nut	X	2
20	NAS1149FN816P	Washer	X	2
21	—	Nut	O	1
22	—	Lockwasher	O	1
23	MS27039C0805	Screw	X	2
24	CI 273	Antenna – FM (403-512 MHz; includes items 21 and 22)	X	1

NOTES

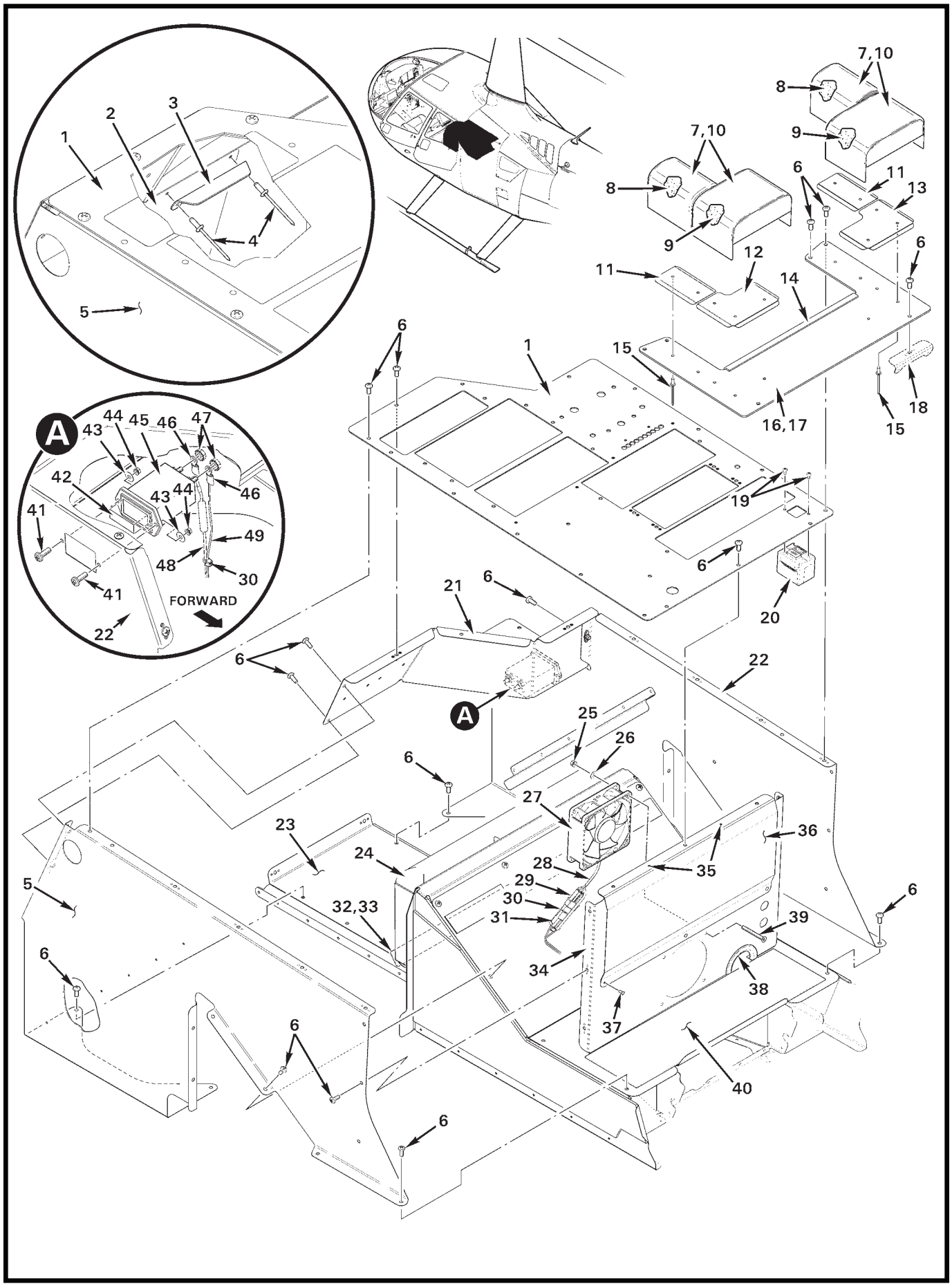

FIGURE 92-45 AFT CONSOLE ASSEMBLY

FIGURE AND INDEX NUMBER	PART NUMBER	DESCRIPTION	PARTS AVAIL	QTY PER ASSY
		AFT CONSOLE ASSEMBLY		
92-45-1	G472-11	Face (standard)	X	1
	G472-12	Face (police scanner)	X	1
	G472-13	Face (AM/FM receiver)	X	1
2	F370-1	Panel (Ref)		
3	G472-14	Angle	X	1
4	B204-1	Rivet	X	2
5	G471-1	Panel Assembly (LH)	X	1
6	MS27039C0806	Screw	X	21
7	B298-__	Leather (-41 Indigo, -43 Silver, -44 Beige, -45 Charcoal) or Velour (-21 Blue, -23 Gray, -24 Tan, -25 Charcoal)	X	A/R
8	G472-16	Foam (small)	X	2
9	G472-17	Foam (large)	X	2
10	B270-8qt	Adhesive	X	A/R
11	G472-7	Support	X	2
12	G472-9	Support (LH)	X	1
13	G472-8	Support (RH)	X	1
14	A226-11	Trim	X	A/R
15	B204-1	Rivet	X	10
16	G472-6	Cover	X	1
17	G472-1	Cushion Assembly (Incl items 7 thru 16)	X	1
18	G472-2	Angle Assembly (Ref)		
19	MS35206-213	Screw	X	2
20	TA202	USB Port	X	1
21	G471-4	Panel Assembly	X	1
22	G471-2	Panel Assembly (RH)	X	1
23	F377-1	Support Assembly (Ref)		
24	G784-1	Evaporator Assembly (Ref)		
25	MS21042L08	Nut	X	4
26	NAS1149FN816P	Washer	X	4
27	D580-4	Fan Assembly(Incl items 28 and 29)	X	1
28	B158-402	Heat Shrink	X	A/R
29	B263-12	Housing	X	1
	B263-1	Pin	X	2
30	MS3367-4-9	Ty-rap	X	2
31	B263-13	Housing (Ref)		

NOTES

Continues

FIGURE AND INDEX NUMBER	PART NUMBER	DESCRIPTION	PARTS AVAIL	QTY PER ASSY
		AFT CONSOLE ASSEMBLY (cont'd)		
92-45-32	G472-19	Plate (mounted onto item 24, install using item 33)	X	1
33	B270-1	Sealant	X	A/R
34	G471-3	Panel Assembly (Incl items 35 thru 38)	X	1
35	NAS1097AD3	Rivet	X	2
36	G471-8	Shield (clear polycarbonate)	X	1
37	MS20470AD3	Rivet	X	3
38	A226-15	Trim	X	A/R
39	MS24694-S19	Screw	X	4
40	G472-18	Pad (self-adhesive)	X	A/R
41	MS35206-229	Screw	X	2
42	D682-19	Decal	X	1
43	NAS1149FN616P	Washer	X	2
44	MS21042L06	Nut	X	2
45	D830-2	Hourmeter (Incl item 47)	X	1
46	B260-3	Terminal	X	2
47	—	Locknut	O	2
48	G459-1626	Wire (Ref)		
	D275-101	Diode	X	1
	B261-2	Splice	X	1
	B158-103	Heat Shrink	X	A/R
49	G459-2568	Wire (Ref)		

NOTES

Intentionally Blank

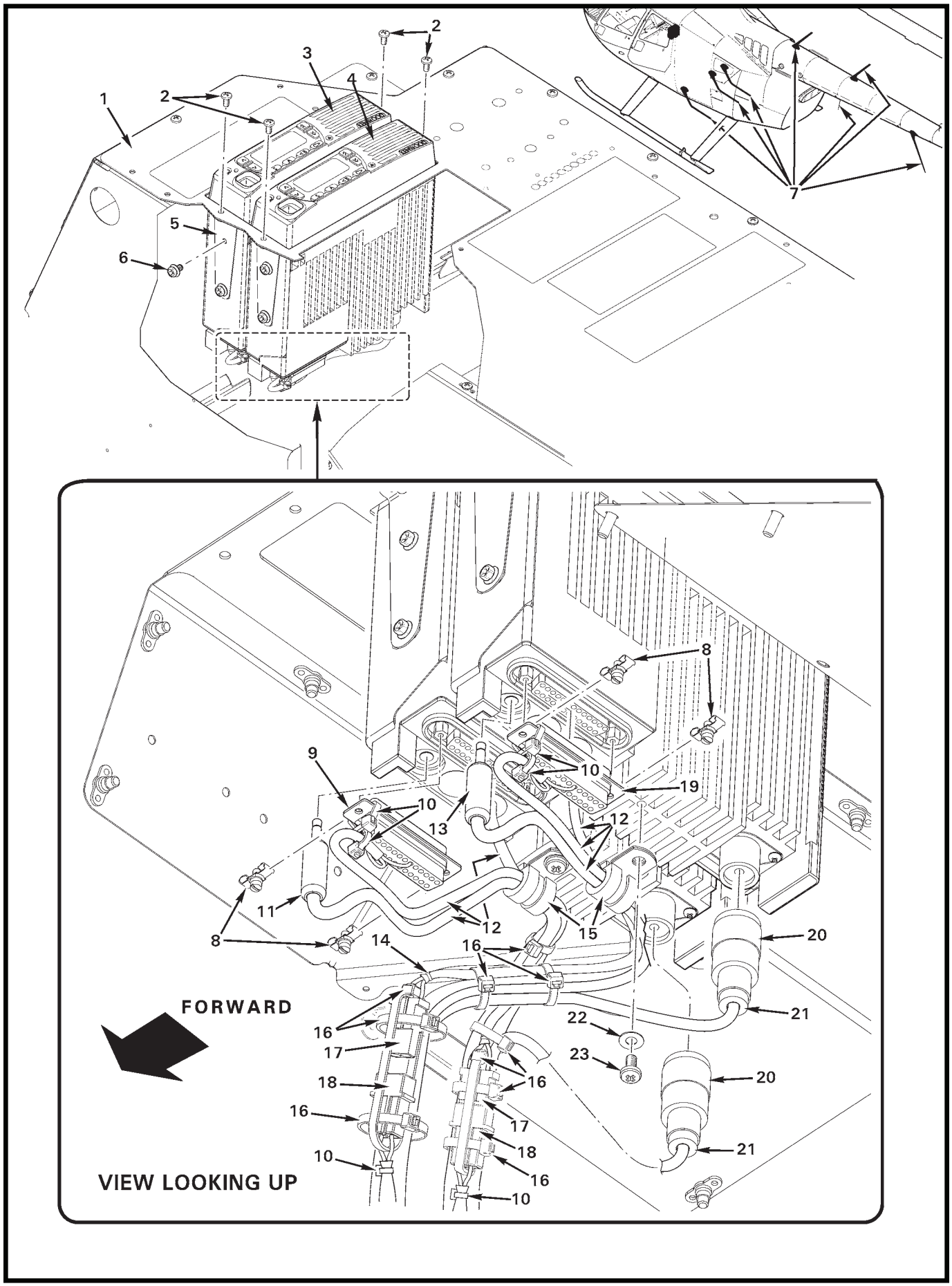
1
2
2
3
4
5
6
7
8
8
9
10
10
10
10
10
11
12
12
13
14
15
16
16
16
16
16
16
17
17
18
18
19
20
20
21
21
22
23
FORWARD
VIEW LOOKING UP

FIGURE AND INDEX NUMBER	PART NUMBER	DESCRIPTION	PARTS AVAIL	QTY PER ASSY
		FM TRANSCEIVERS INSTALLATION		
92-49-1	G470	Console Assembly (aft, Ref)		
2	MS27039C0805	Screw	X	4
3	A824-8	FM Transceiver (UHF [FM2], includes item 6)	X	1
4	A824-7	FM Transceiver (VHF [FM3], includes item 6)	X	1
	A824-8	FM Transceiver (UHF [FM3], includes item 6)	X	1
5	B344-25	Angle	X	4
6	—	Screw	O	8
7	F850	Antenna Installation (Ref; specific antenna required per transceiver frequency range. One antenna required per transceiver installation. Refer to R66 IPC chapter 6 for antenna installations.)		
8	A269-31	Male Screw Lock	X	2
9	B269-11	Plug	X	2
10	MS3367-4-0	Ty-rap	X	A/R
11	750	Plug	X	1
	-1010*	Wire (Ref)		
12	B266-4	Sleeving	X	A/R
13	750	Plug	X	1
	-1017*	Wire (Ref)		
14	B268-3	Lacing Tape	X	A/R
15	MS21919WDG5	Clamp	X	2
16	MS3367-5-0	Ty-rap	X	A/R
17	B263-12	Housing	X	1
	B263-1	Pin	X	2
18	B263-13	Housing	X	1
	B263-2	Socket	X	2
19	B269-11	Plug	X	1
20	83-1SP-1050	Plug	X	1
21	83-185	Reducer	X	1
22	NAS1149FN816P	Washer	X	2
23	92000A218	Screw	X	2

NOTES * See R66 MM §92 wiring diagrams.

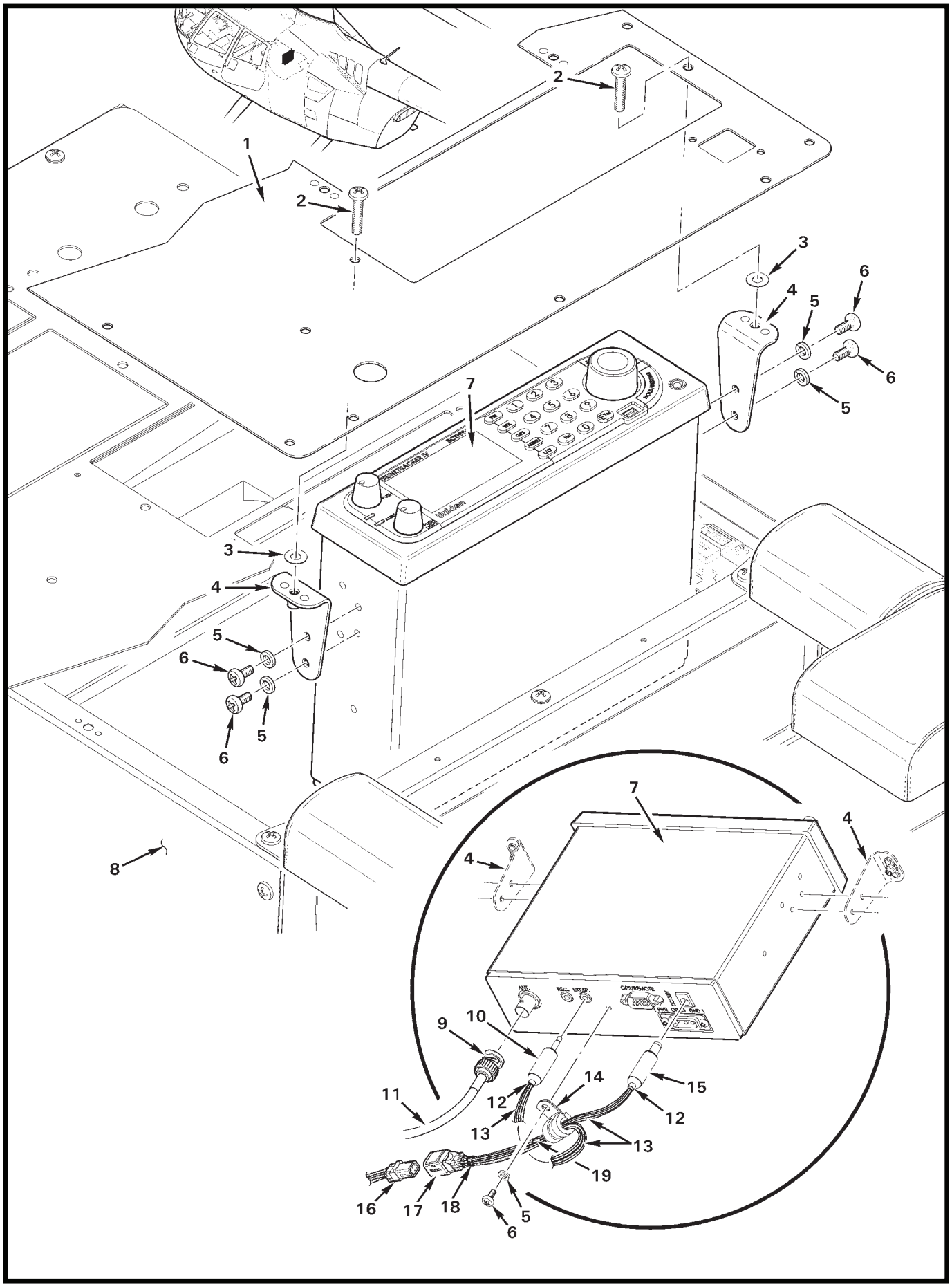
1
2
2
3
4
5
6
6
5
7
3
4
5
6
5
6
8
7
4
4
9
10
11
12
13
14
15
12
13
19
16
17
18
5
6

FIGURE AND INDEX NUMBER	PART NUMBER	DESCRIPTION	PARTS AVAIL	QTY PER ASSY
		SCANNER INSTALLATION		
92-51-1	G472	Face (Ref)		
2	MS27039C0807	Screw	X	2
3	NAS1149FN816P	Washer	X	2
4	D344-19	Angle Assembly	X	2
5	B332-42	Lockwasher	X	4
6	92000A218	Screw	X	4
7	BCD996XT*	Scanner (TrunkTracker IV)	X	1
8	G471-1	Panel (LH, aft console; Ref)		
9	225395-6	Plug	X	1
10	750	Plug	X	1
	-1217**	Wire (blue, Ref)		
	-1217**	Wire (white, Ref)		
11	G459-1219	Cable (antenna, Ref)		
12	B158-2	Heat Shrink	X	A/R
13	B266-4	Sleeving	X	A/R
14	MS21919WDG3	Clamp	X	1
15	S760	Plug	X	1
	-1215**	Wire (power, Ref)		
	-1216**	Wire (ground, Ref)		
16	D269-6	Receptacle (G459 Harness Assembly, Ref)		
17	D269-5	Plug (wires from 10 and 15)	X	1
18	B268-3	Lacing	X	A/R
19	B267-3	Terminator	X	1

NOTES * Uniden America Corp. part no.

** See R66 MM §92 wiring diagrams.

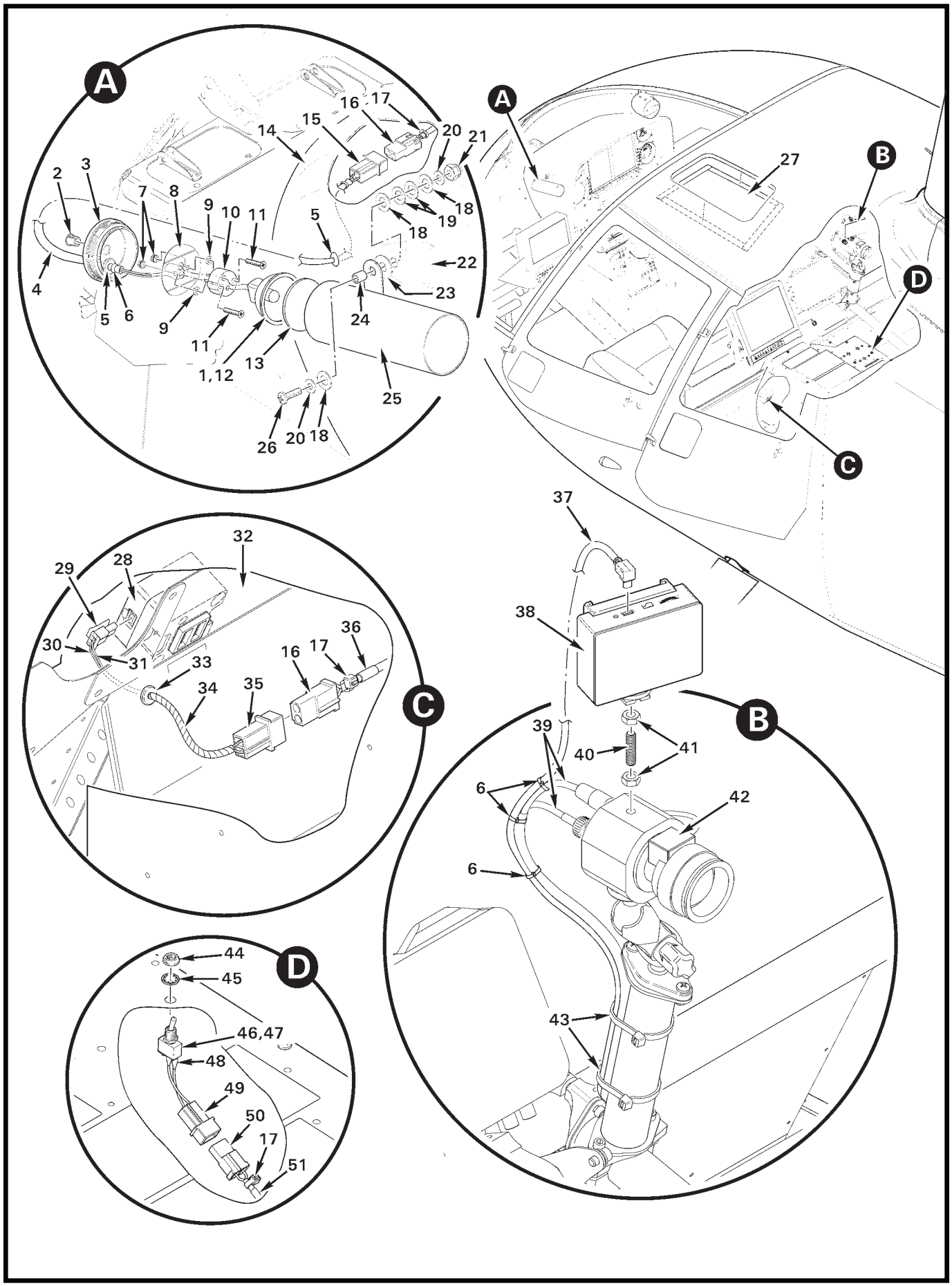

FIGURE 92-53 TALENT LIGHTS INSTALLATION

FIGURE AND INDEX NUMBER	PART NUMBER	DESCRIPTION	PARTS AVAIL	QTY PER ASSY
		TALENT LIGHTS INSTALLATION		
92-53-1	D553-1	Light Assembly – Talent (Incl items 2 thru 13, and 25)	X	1
2	2603	Hole Plug	X	1
3	D566-9	Cap	X	1
4	B266-4	Sleeving	X	A/R
5	MS35489-4	Grommet	X	2
6	B268-3	Lacing Tape	X	A/R
7	MS21042L04	Nut	X	2
8	D566-4	Base	X	1
9	NAS620-4	Washer	X	2
10	H9941	Holder	X	1
11	MS24693-S7	Screw	X	2
12	L517A	Lamp (includes wires)	X	1
13	D566-5	Lens	X	1
14	—	Console Assembly (Ref)		
15	B263-32	Housing	X	1
	B263-1	Pin	X	2
16	B263-33	Housing	X	2
	B263-2	Socket	X	2
	G459-1141	Wire (Ref)		
	G459-1142	Wire (Ref)		
	B158-6	Heat Shrink (labeled “TALENT LT”)	X	A/R
17	MS3367-4-0	Ty-rap	X	A/R
18	NAS1149F0432P	Washer	X	3
19	B0500-022-S	Belleville Washer	X	2
20	NAS1149FN832P	Washer	X	2
21	B340-4	Nut	X	1
22	D566-10	Bracket (Ref)		
23	A141-7	Washer	X	1
24	A105-5	Journal	X	1
25	D553-2	Housing Assembly	X	1
26	MS27039C0809	Screw	X	1
27	D576-1	Cover Assembly	X	1
28	6430202-2	USB Port (dual, type A and C)	X	1
29	43645-0200	Housing	X	1
	43030-0007	Socket	X	2

NOTES

Continues

FIGURE AND INDEX NUMBER	PART NUMBER	DESCRIPTION	PARTS AVAIL	QTY PER ASSY
		TALENT LIGHTS INSTALLATION (Cont'd)		
92-53-30	G459-1377	Wire (Pin "A", Ref)		
31	G459-1376	Wire (Pin "B", Ref)		
32	F461-4	Cover Assembly (Ref)		
33	MS35489-1	Grommet	X	1
34	B161-4	Spirap	X	A/R
35	B263-12	Housing	X	1
	B263-1	Pin	X	2
36	B158-6	Heat Shrink (labeled "AFT LT PWR")	X	A/R
37	—	Cable (mini USB, charging)	O	1
38	ILED-MA	Light (Incl item 37)	X	1
39	—	Cable/Wire (Camera; Ref)		
40	90322A645	Stud	X	1
41	91819A110	Nut	X	2
42	CV345	Camera (Ref)		
43	MS3367-7-0	Ty-rap	X	2
44	B227-4	Dress Nut	X	1
45	B227-3	Lockwasher	X	1
46	B049-9	Switch Assembly (forward talent light; includes items 47, 49, and 51)	X	1
47	B300-1	Switch Assembly (Incl items 44 and 45)	X	1
48	B158-1	Heat Shrink	X	A/R
49	B263-12	Housing	X	1
	B263-1	Pin	X	2
50	B263-13	Housing	X	1
	B263-2	Socket	X	2
	G459-898	Wire (Ref)		
	G459-1141	Wire (Ref)		
	G459-1377	Wire (Ref)		
51	B158-6	Heat Shrink (labeled "FWD LT SW")	X	A/R

NOTES

Intentionally Blank

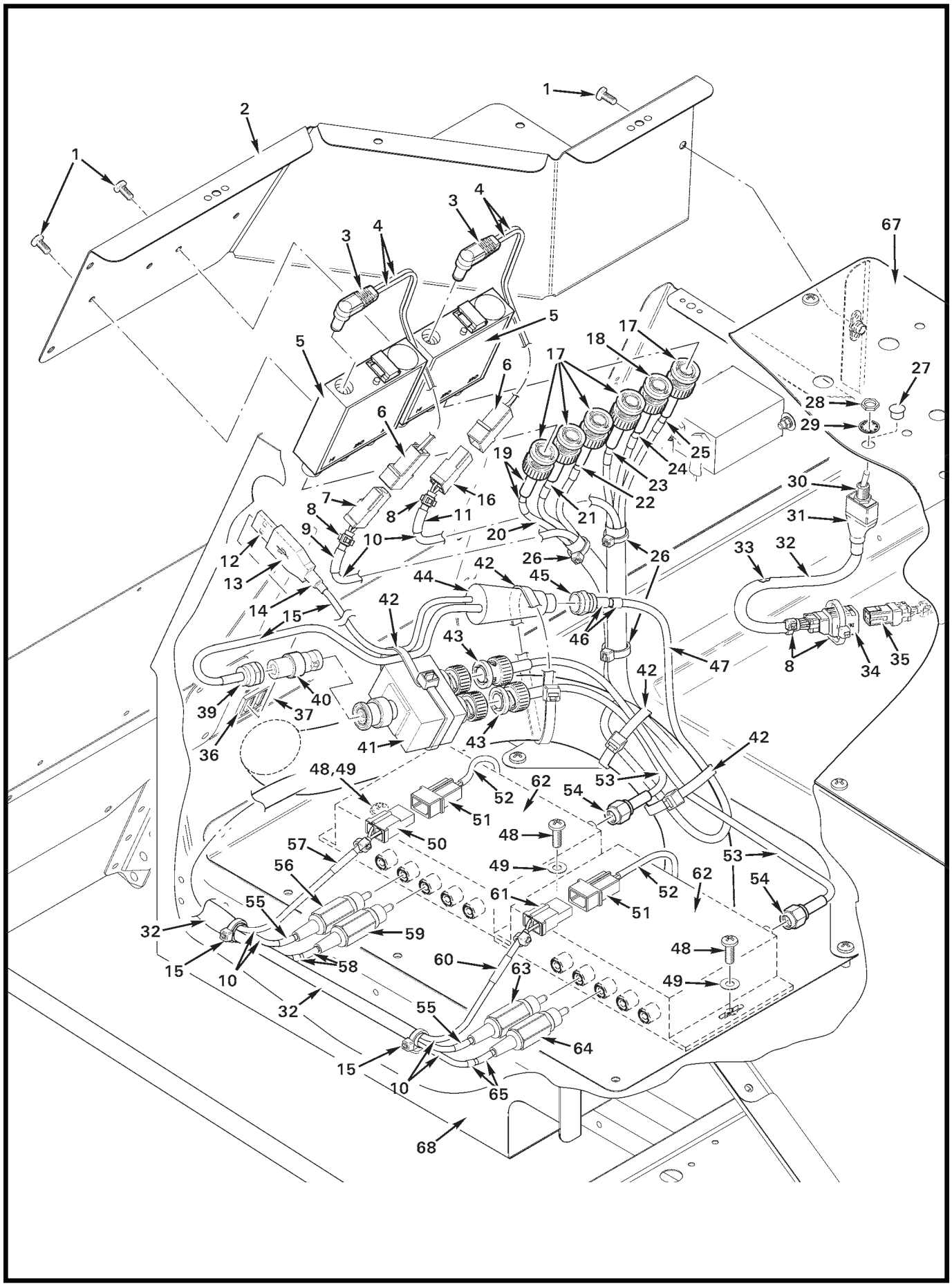
1
2
1
3
4
3
4
5
5
6
6
7
8
9
10
11
8
16
12
13
14
15
17
18
17
19
20
21
22
23
24
25
26
26
27
28
29
30
31
32
33
32
34
35
8
42
44
45
42
46
43
47
42
39
40
37
36
41
43
42
48,49
52
62
53
54
51
50
48
49
57
56
55
61
52
62
53
54
51
32
59
15
10
58
60
63
48
49
32
55
64
15
10
65
68
67

FIGURE AND INDEX NUMBER	PART NUMBER	DESCRIPTION	PARTS AVAIL	QTY PER ASSY
		TV RECEIVER PROVISION INSTALLATION		
92-57-1	MS27039C0806	Screw (Ref)		
2	G471-4	Panel Assembly (Ref)		
3	—	Plug	O	1
4	—	Wire (white, power)	O	1
		Wire (black, ground)	O	1
5	11-911-102	Distribution Amp (Incl items 3 and 4)	X	2
6	B263-12	Housing	X	2
	B263-1	Pin	X	2
7	B263-33	Housing	X	1
	B263-2	Socket	X	2
	G459-1145*	Wire (Ref; power)		
	G459-1146*	Wire (Ref; ground)		
8	MS3367-4-0	Ty-Rap	X	A/R
9	B158-6	Heat Shrink (labeled “DIST AMP 1”)	X	A/R
10	B266-4	Sleeving	X	A/R
11	B158-6	Heat Shrink (labeled “DIST AMP 2”)	X	A/R
12	AE10091-ND	Plug Assembly (to 5V aux power jack)	X	1
	—	Wire (red pin #1, VBUS; Ref)		
	—	Wire (black pin #2, ground; Ref)		
	B158-804	Heat Shrink	X	A/R
13	AE10090-ND	Hood	X	1
14	B158-804	Heat Shrink	X	A/R
15	—	Wire	O	1
16	B263-33	Housing	X	1
	B263-2	Socket	X	2
	G459-2808*	Wire (Ref, power)		
	G459-2810*	Wire (Ref, ground)		
17	2065-11-9	Plug (or 2025-47-9; BNC)	X	5
18	10-03001-215	Plug (BNC)	X	1
19	B158-6	Heat Shrink	X	A/R
20	G459-761*	Wire (Ref; item 19 labeled “IN” and “761”)		
21	G459-780*	Wire (Ref; item 19 labeled “OUT” and “780”)		
22	G459-1836*	Wire (Ref; item 19 labeled “OUT” and “1836”)		
23	G459-2807*	Wire (Ref; item 19 labeled “IN” and “2807”)		
24	G459-2797*	Wire (Ref; item 19 labeled “OUT” and “2797”)		

NOTES * See R66 MM §92 wiring diagrams.

Continues

FIGURE AND INDEX NUMBER	PART NUMBER	DESCRIPTION	PARTS AVAIL	QTY PER ASSY
		TV RECEIVER PROVISION INSTALLATION (Cont'd)		
92-57-25	G459-2799*	Wire (Ref, item 19 labeled "OUT" and "2799")		
	G471-2	Panel Assembly (Ref)		
26	MS3367-5-0	Ty-rap	X	A/R
27	2603	Hole Plug (if item 30 is not installed)	X	1
28	B227-4	Dress Nut	X	1
29	B227-3	Lockwasher	X	1
30	B300-2	Switch Assembly (TV tuner audio; includes items 28 and 29)	X	1
	B158-2	Heat Shrink (around wires/terminals)	X	A/R
31	B158-8	Heat Shrink (around switch assembly)	X	A/R
32	B266-8	Sleeving	X	A/R
33	-1095*	Wire (blue, Ref)		
	-1095*	Wire (white, Ref)		
	-1096*	Wire (Ref)		
	-2806*	Wire (Ref)		
	—	Wire (shield, Ref)		
	—	Wire (shield, Ref)		
34	D269-5	Plug	X	1
35	D269-6	Receptacle	X	1
	B267-2	Terminator	X	2
	B158-2	Heat Shrink (around wires)	X	A/R
36	6430102-2	USB Port (Ref)		
37	F461-5	Cover (Ref)		
38	—	Wire	O	1
39	—	Plug	O	1
40	242161	Adapter	X	1
41	D590-1	Splitter Assembly	X	1
42	MS3367-7-0	Ty-rap	X	A/R
43	2065-11-9	Plug	X	2
44	MH-110600	Amplifier (Incl items 15 and 38)	X	1
45	5221185-2	Plug	X	1
46	B158-6	Heat Shrink (labeled "TUNER" and "-2811")	X	A/R
47	G459-2811*	Wire (Ref)		
48	MS27039C0807	Screw	X	3
49	NAS1149FN816P	Washer	X	3

NOTES * See R66 MM §92 wiring diagrams.

Continues

FIGURE AND INDEX NUMBER	PART NUMBER	DESCRIPTION	PARTS AVAIL	QTY PER ASSY
		TV RECEIVER PROVISION INSTALLATION (Cont'd)		
92-57-50	B263-33	Housing	X	1
	B263-2	Socket	X	2
	G459-935*	Wire (Ref)		
	G459-2808*	Wire (Ref)		
	G459-2809*	Wire (Ref)		
51	B263-12	Housing	X	2
	B263-1	Pin	X	2
52	—	Power Cable	O	A/R
53	B274-525	Wire	X	A/R
54	132242	Plug (SMA)	X	2
	B158-804	Heat Shrink	X	A/R
55	B158-6	Heat Shrink (labeled "AUDIO")	X	A/R
56	174-4356	Plug	X	1
	B158-2	Heat Shrink	X	A/R
57	B158-6	Heat Shrink (labeled "TUNER 2 PWR")	X	A/R
58	B158-6	Heat Shrink (labeled "VID OUT" and "-2807")	X	A/R
59	174-4356	Plug	X	1
	G459-2807*	Wire (Ref; see R66 MM §92 wiring diagrams)		
60	B158-6	Heat Shrink (labeled "TUNER 1 PWR")	X	A/R
61	B263-33	Housing	X	1
	B263-2	Socket	X	2
	G459-935*	Wire (Ref)		
	G459-1006*	Wire (Ref)		
	G459-1145*	Wire (Ref)		
62	—	TV Receiver (Incl item 52)	O	2
63	174-4356	Plug	X	1
	G459-1096*	Wire (Ref)		
64	174-4356	Plug	X	1
	G459-761*	Wire (Ref)		
65	B158-6	Heat Shrink (labeled "VID OUT" and "-761")	X	A/R
66	F463-2	Cover (Ref)		
67	G472	Face (Ref)		
68	G471-1	Panel Assembly (LH, aft console; Ref)		

NOTES * See R66 MM §92 wiring diagrams.

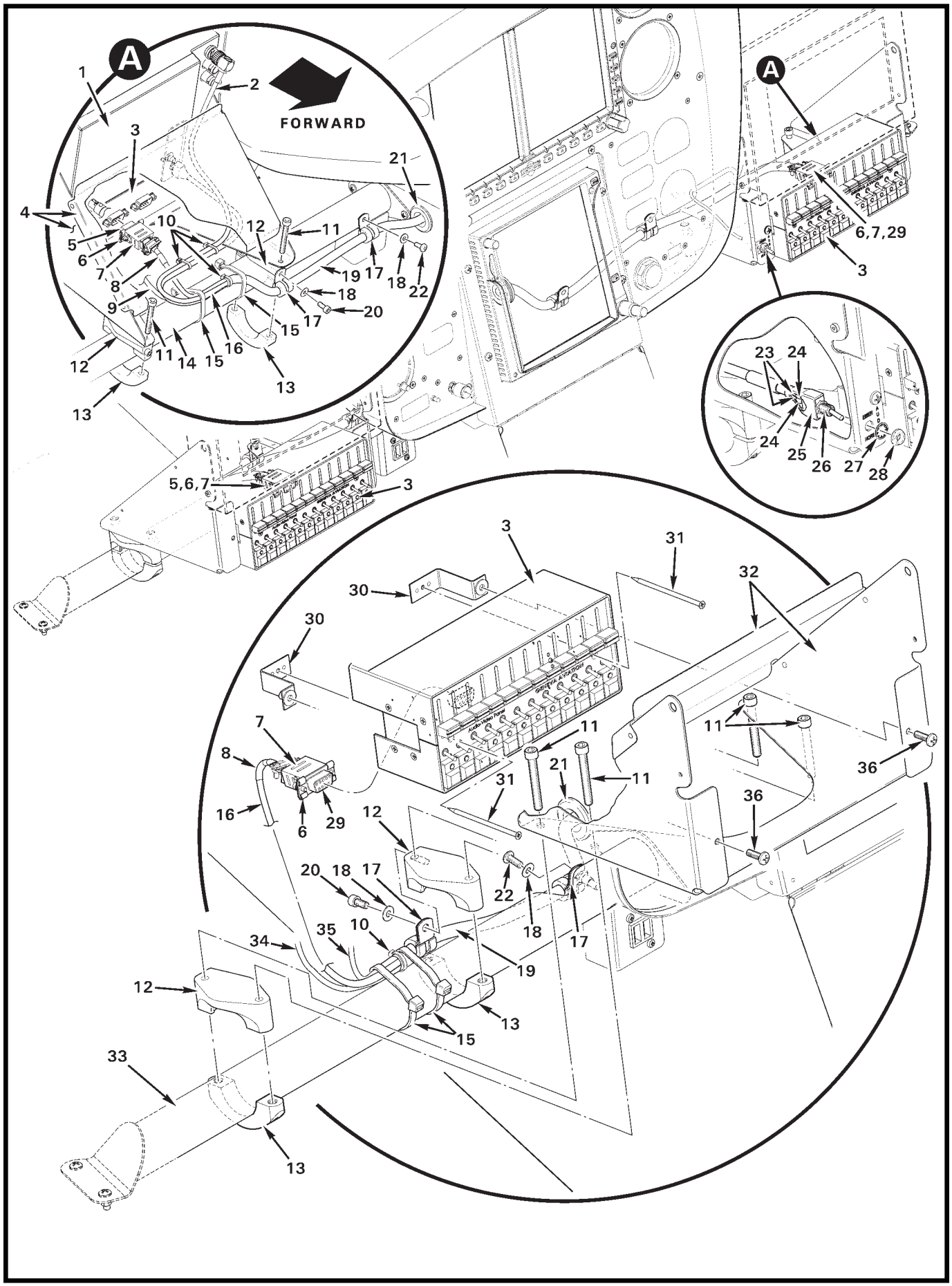
A
FORWARD
1
2
3
4
5
6
7
8
9
10
11
12
13
14
15
16
17
18
19
20
21
22
23
24
25
26
27
28
29
30
31
32
33
34
35
36
5,6,7
6,7,29
Audio Video Panel
GENEVA AUDIO PANEL

FIGURE AND INDEX NUMBER	PART NUMBER	DESCRIPTION	PARTS AVAIL	QTY PER ASSY
		GENEVA AUDIO – FORWARD AUDIO PANELS		
92-61-1	BVB07	Monitor (Ref)		
2	G459-779	Wire (pilot monitor, Ref)		
3	G11431-00102-1	Audio Panel (Incl item 30)	X	2
4	G474-15	Cover Assembly (RH)	X	1
5	B269-4	Receptacle	X	1
	B158-2	Heat Shrink	X	A/R
	B158-4	Heat Shrink	X	A/R
	G459-1026	Wire (Ref)		
	G459-1027	Wire (Ref)		
	G459-1028	Wire (Ref)		
	G459-1029	Wire (Ref)		
6	B269-31	Screw Lock (male)	X	2
7	B269-21	Backshell	X	2
8	B158-6	Heat Shrink	X	A/R
9	G459-980	Wire (pilot monitor, Ref)		
	G459-980	Wire (pilot monitor, Ref)		
10	MS3367-4-0	Ty-rap	X	A/R
11	NAS1351-3-24	Screw	X	8
12	B630-3	Clamp	X	2
13	B630-2	Clamp Assembly	X	2
14	G703-5	Support Assembly (RH, Ref)		
15	MS3367-7-0	Ty-rap	X	4
16	B266-4	Sleeving	X	A/R
17	MS21919WDG5	Clamp	X	4
18	NAS1149FN816P	Washer	X	2
19	B266-8	Sleeving	X	A/R
20	NAS1352-08-06	Screw	X	2
21	MS35489-17	Grommet	X	2
22	MS27039C0806	Screw	X	2
23	G459-1097	Wire (Ref)		
	G459-1098	Wire (Ref)		
24	B158-2	Heat Shrink (around item 23)	X	A/R
25	B158-808	Heat Shrink (around item 23)	X	A/R
26	B300-1	Switch Assembly (Incl items 27 and 28)	X	1
27	B227-3	Lockwasher	X	1

NOTES

Continues

FIGURE AND INDEX NUMBER	PART NUMBER	DESCRIPTION	PARTS AVAIL	QTY PER ASSY
		GENEVA AUDIO – FORWARD AUDIO PANELS (Cont'd)		
92-61-28	B227-4	Dress Nut	X	1
29	B269-4	Receptacle	X	1
	B158-2	Heat Shrink	X	A/R
	B158-4	Heat Shrink	X	A/R
	G459-267*	Wire (Ref)		
	G459-1030*	Wire (Ref)		
	G459-31*	Wire (Ref)		
	G459-32*	Wire (Ref)		
	G459-33*	Wire (Ref)		
30	D344-4	Angle Assembly	X	4
31	—	Screw	O	2
32	G474-14	Cover Assembly (LH)	X	1
	G474-15	Cover Assembly (RH)	X	1
33	G705-8	Support Assembly (LH, Ref)		
34	G459-780*	Wire (Ref)		
35	G459-979*	Wire (Ref)		
	G459-981*	Wire (Ref)		
36	MS27039C0808	Screw	X	4

NOTES *

Intentionally Blank

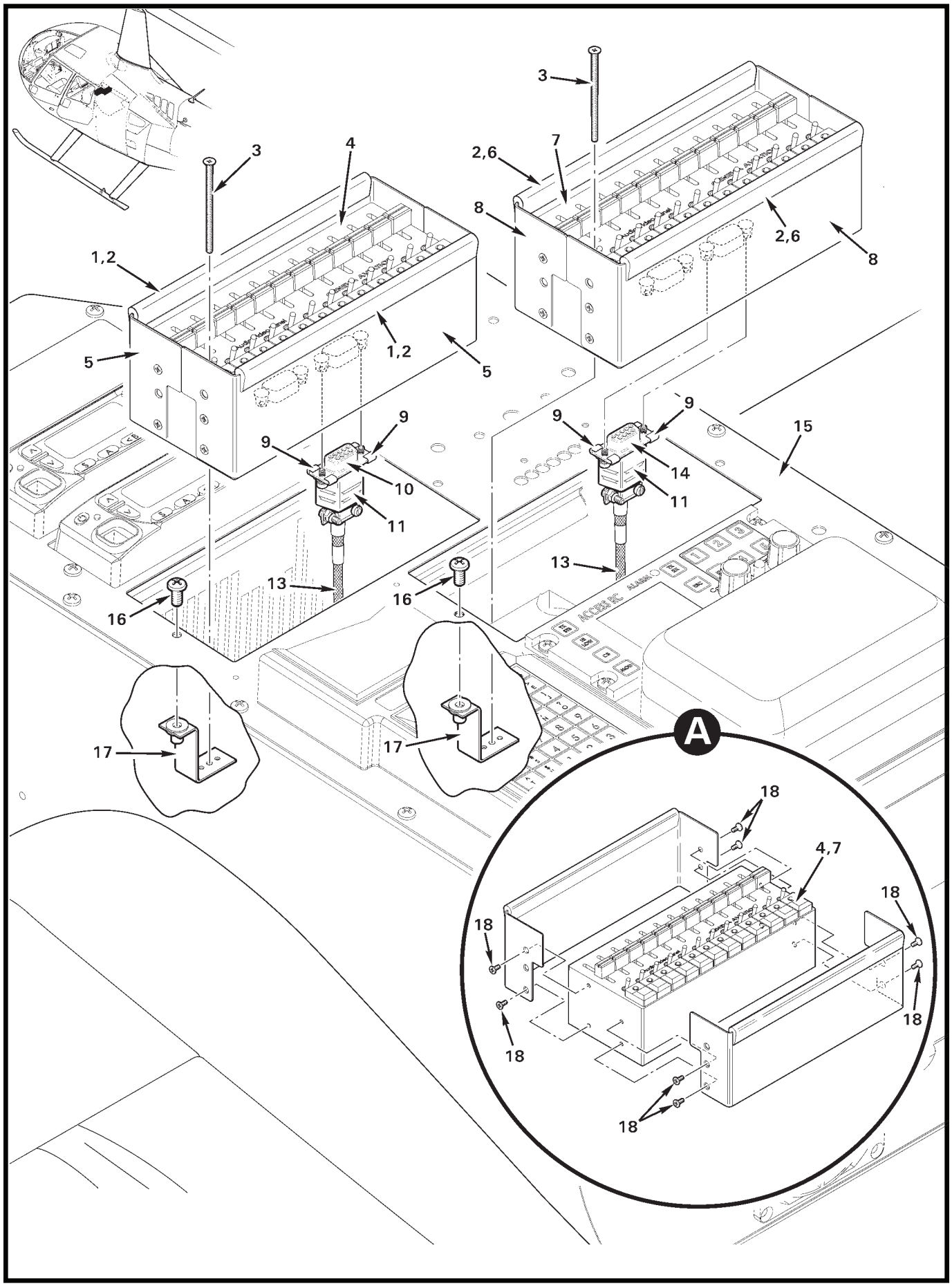
3
4
3
2,6
7
8
2,6
8
1,2
1,2
5
5
9
9
9
9
15
10
14
11
11
13
13
16
16
17
17
A
18
4,7
18
18
18
18
18

FIGURE AND INDEX NUMBER	PART NUMBER	DESCRIPTION	PARTS AVAIL	QTY PER ASSY
		GENEVA AUDIO – AFT AUDIO PANELS		
92-65-1	4869A66	Trim (black, install using item 2)	X	2
2	B270-13	Adhesive	X	A/R
3	—	Screw	O	2
4	D579-7	Audio Panel (PAX-photo; includes items 3 and 18)	X	1
5	D557-5	Cover	X	2
6	4869A1	Trim (orange, install using item 2)	X	A/R
7	D579-9	Audio Panel (microwave; includes items 3 and 18)	X	1
8	D557-4	Cover Assembly (Incl items 2 and 6)	X	1
9	B269-31*	Screw Lock (male)	X	2
10	B269-4*	Receptacle	X	1
11	B269-21*	Backshell	X	1
12	B158-4	Heat Shrink	X	A/R
	B158-2	Heat Shrink (around wires)	X	A/R
13	B266-4*	Sleeving	X	A/R
14	B269-19*	Plug	X	1
15	G470	Console Assembly (aft, Ref)		
16	MS27039C0806	Screw	X	4
17	D344-4	Angle Assembly	X	2
18	—	Screw	O	8

NOTES * Ref, from G459-1 harness assembly.

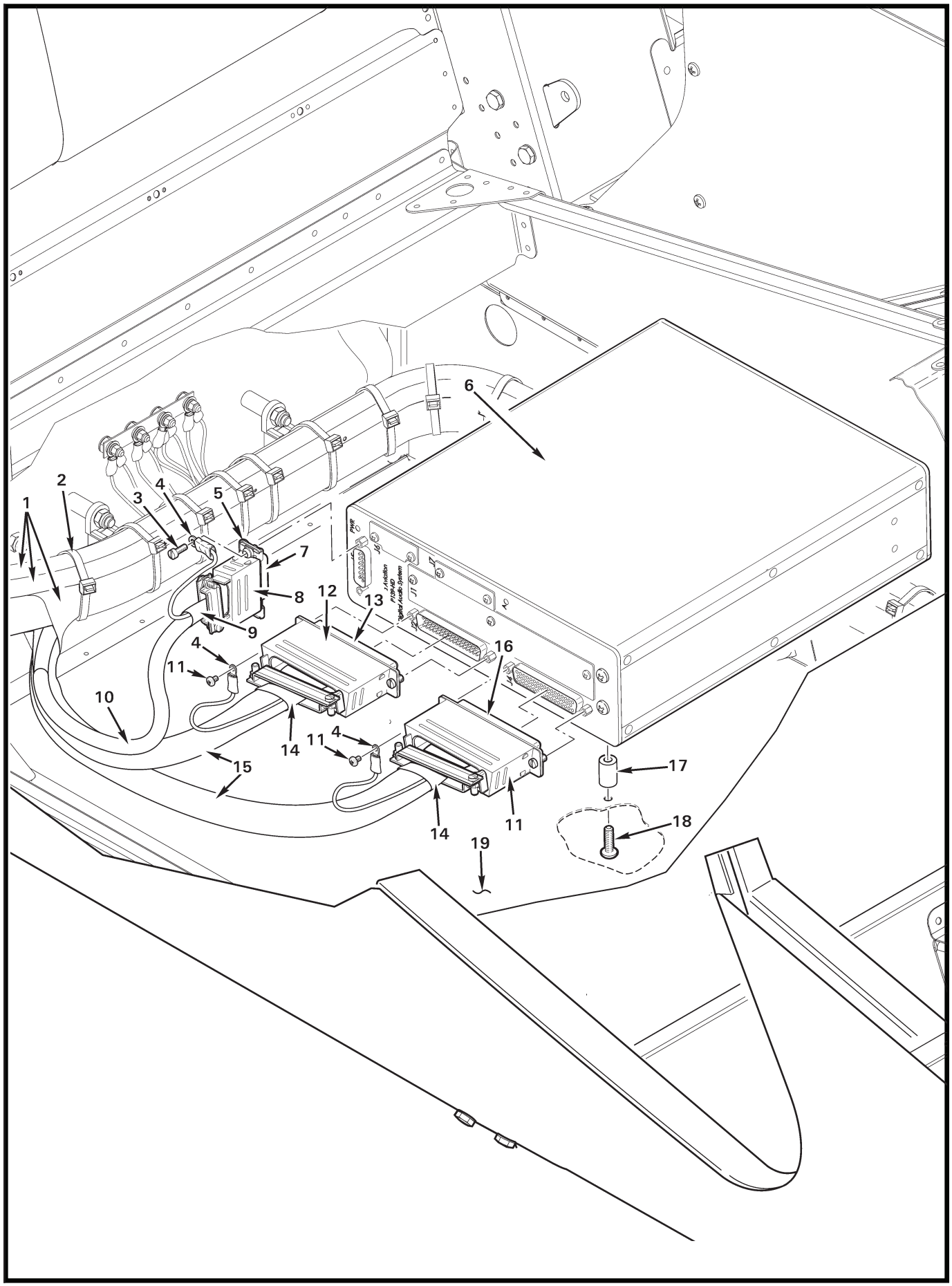
1
2
3
4
5
6
7
8
9
10
11
12
13
14
15
16
17
18
19
PWR
J6
J2
J1
J3
J4
Aviation
P130-HD
Digital Audio System

FIGURE AND INDEX NUMBER	PART NUMBER	DESCRIPTION	PARTS AVAIL	QTY PER ASSY
		GENEVA AUDIO – DIGITAL ROUTER		
92-67-1	G459-1	Harness Assembly (Ref)		
2	MS3367-7-0	Ty-rap	X	A/R
3	—	Screw	X	1
4	B260-1	Terminal	X	3
5	B269-31	Male Screw Lock (Incl item 3)	X	2
6	G13000	Router (P139HD Digital)	X	1
7	B269-6	Receptacle	X	1
	B267-2*	Terminator	X	A/R
	B267-3*	Terminator	X	A/R
8	B269-22	Backshell	X	1
9	B158-6	Heat Shrink	X	A/R
10	B266-4	Sleeving	X	A/R
11	MS35206-212	Screw	X	2
12	B269-25	Backshell	X	2
13	B269-20	Receptacle (J2)	X	1
	B269-62*	Socket	X	3
	B267-2*	Terminator	X	A/R
	B267-3*	Terminator	X	A/R
	RNC55H4120FS*	Resistor	X	2
14	B158-12	Heat Shrink	X	A/R
15	B266-8	Sleeving	X	A/R
16	B269-19	Plug (J4)	X	1
	B261-61	Pin	X	10
	B267-2*	Terminator	X	A/R
	B267-3*	Terminator	X	A/R
	B267-4*	Terminator	X	A/R
17	C130-51	Spacer	X	4
18	MS27039C1-18	Screw	X	4
19	F387-1	Skin (Ref)		

NOTES * Ref, from G459-1 harness assembly.

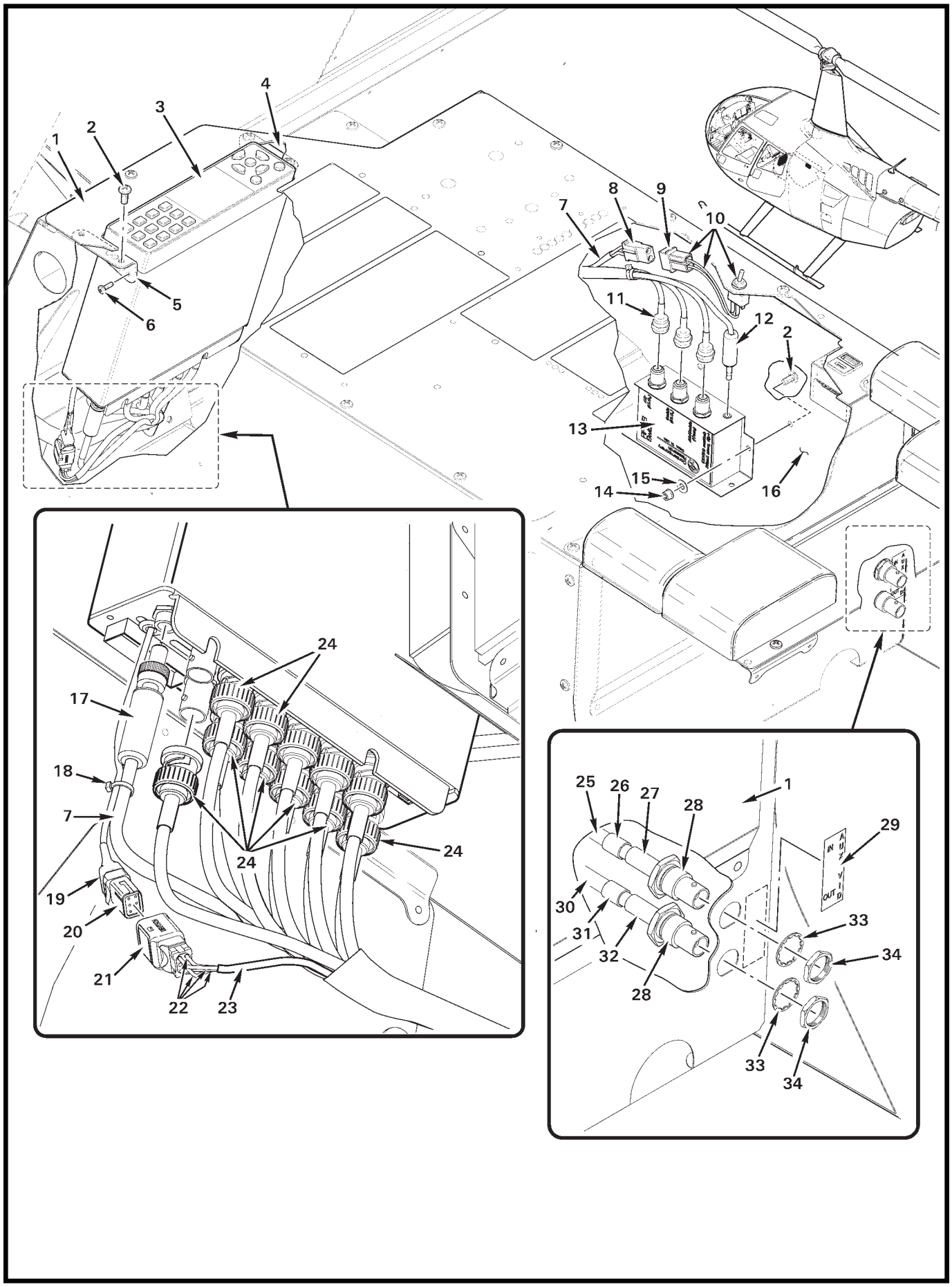
1
2
3
4
5
6
7
8
9
10
11
12
2
13
14
15
16
17
18
7
19
20
21
22
23
24
24
24
25
26
27
28
1
29
30
31
32
28
33
34
33
34

FIGURE AND INDEX NUMBER	PART NUMBER	DESCRIPTION	PARTS AVAIL	QTY PER ASSY
		VIDEO COMPONENTS INSTALLATION		
92-69-1	G470	Console Assembly (aft, Ref)		
2	MS27039C0806	Screw	X	6
3	BENXT430X	Video Router	X	1
4	D344-29	Angle Assembly (RH)	X	1
5	D344-27	Angle Assembly (LH)	X	1
6	MS35206-215	Screw	X	4
7	B161-4	Sleeving	X	A/R
8	B263-13	Housing	X	1
	B263-2	Socket	X	1
	B263-4	Socket	X	1
9	B263-12	Housing	X	1
	B263-1	Pin	X	2
10	B049-9	Switch Assembly (Includes item 9, wires, switch, heat shrink, assembled)	X	1
	B300-1	Switch Assembly	X	1
11	222126	Plug	O	3
12	171-2035	Plug	X	1
	B158-2	Heat Shrink	X	1
13	RH-AB	Switch – Video	X	1
14	MS21042L08	Nut	X	2
15	NAS1149FN816P	Washer	X	2
16	G471-6	Panel (RH, Ref)		
17	S761K	Plug	X	1
	B158-2	Heat Shrink	X	A/R
18	MS3367-4-0	Ty-rap (black)	X	A/R
19	B158-6	Heat Shrink (around item 20)	X	A/R
20	D269-6	Receptacle	X	1
21	D269-5	Receptacle	X	1
22	-2805*	Wires ([4] total, Ref)		
23	B158-2	Heat Shrink	X	A/R
24	2065-11-9	Plug (or 2025-47-9, BNC)	X	11
	B158-3	Heat Shrink	X	A/R
25	G459-2852*	Wire (Ref)		
26	B158-6	Heat Shrink (labeled “AUX VID IN”)	X	A/R
27	B158-6	Heat Shrink (labeled “-2852”)	X	1

NOTES * See R66 MM §92 wiring diagrams.

FIGURE AND INDEX NUMBER	PART NUMBER	DESCRIPTION	PARTS AVAIL	QTY PER ASSY
		VIDEO COMPONENTS INSTALLATION (cont'd)		
92-69-28	112568	Jack (BNC, includes items 33 and 34)	X	2
29	G654-10	Decal – "AUX VID, IN, OUT"	X	1
30	G459-2853	Wire (Ref; see R66 MM §92 wiring diagrams)		
31	B158-6	Heat Shrink (labeled "-2853")	X	A/R
32	B158-6	Heat Shrink (labeled "AUX VID OUT")	X	A/R
33	—	Lockwasher	O	1
34	—	Nut	O	1

NOTES

Intentionally Blank

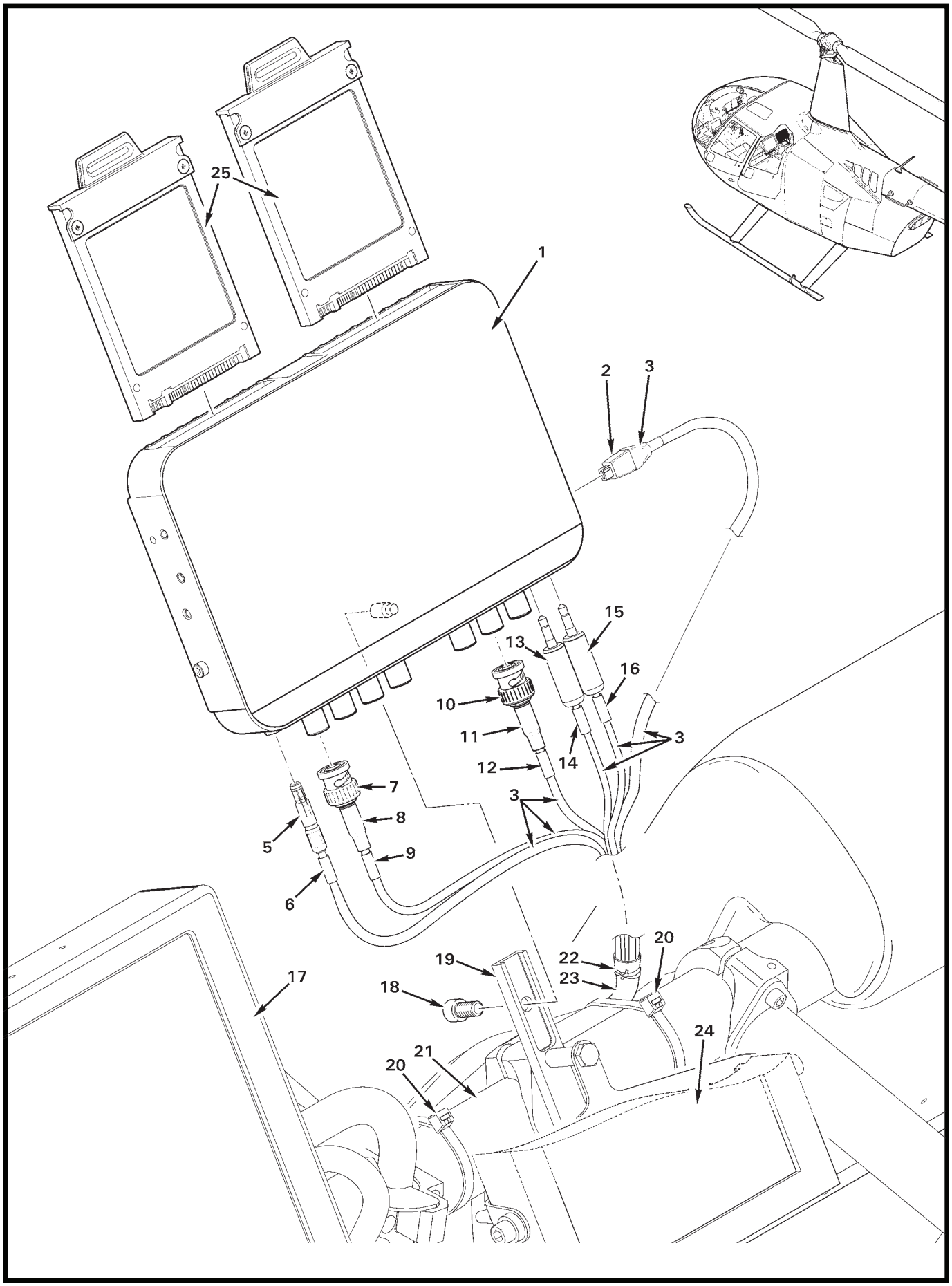

FIGURE 92-73 DVR/MONITOR INSTALLATION

FIGURE AND INDEX NUMBER	PART NUMBER	DESCRIPTION	PARTS AVAIL	QTY PER ASSY
		DVR/MONITOR INSTALLATION		
92-73-1	ODYSSEY7Q	DVR/Monitor (or ODYSSEY7QPLUS)	X	1
2	B158-804	Heat Shrink	X	A/R
3	B266-4	Sleeving	X	A/R
4	MQ172X-4SA-CV	Plug	X	1
	G459-2816*	Wire (Ref)		
5	NSC3F	Connector	X	1
	G459-904*	Wire (Ref)		
	G459-955*	Wire (Ref)		
6	B158-3	Heat Shrink (labeled “DVR PWR”)	X	A/R
7	2065-11-9	Plug (BNC; or 2025-47-9)	X	1
	G459-758*	Wire (Ref; see R66 MM §92 wiring diagrams)		
8	B158-3	Heat Shrink (labeled “SDI A IN”)	X	A/R
9	B158-3	Heat Shrink (labeled “–758”)	X	A/R
10	2065-11-9	Plug (BNC; or 2025-47-9)	X	1
	G459-753*	Wire (Ref)		
11	B158-3	Heat Shrink (labeled “SDI A OUT”)	X	A/R
12	B158-3	Heat Shrink (labeled “–753”)	X	A/R
13	750	Plug	X	1
	G459-965*	Wire (Ref)		
14	B158-3	Heat Shrink (labeled “AUD IN”)	X	A/R
15	750	Plug	X	1
	G459-968*	Wire (Ref)		
16	B158-3	Heat Shrink (labeled “AUD OUT”)	X	A/R
17	HD10CINEROB	Monitor (Ref)		
18	NAS1352-4-8	Screw	X	1
19	G474-3	Bar (Ref)		
20	MS3367-7-0	Ty-rap	X	A/R
21	F423-1	Weldment (Ref)		
22	B268-3	Lacing Tape	X	A/R
23	B266-8	Sleeving	X	A/R
24	VFM-056W	Monitor (Ref)		
25	—	Solid State Drive (Ref; removable)		

NOTES * See R66 MM §92 wiring diagrams.

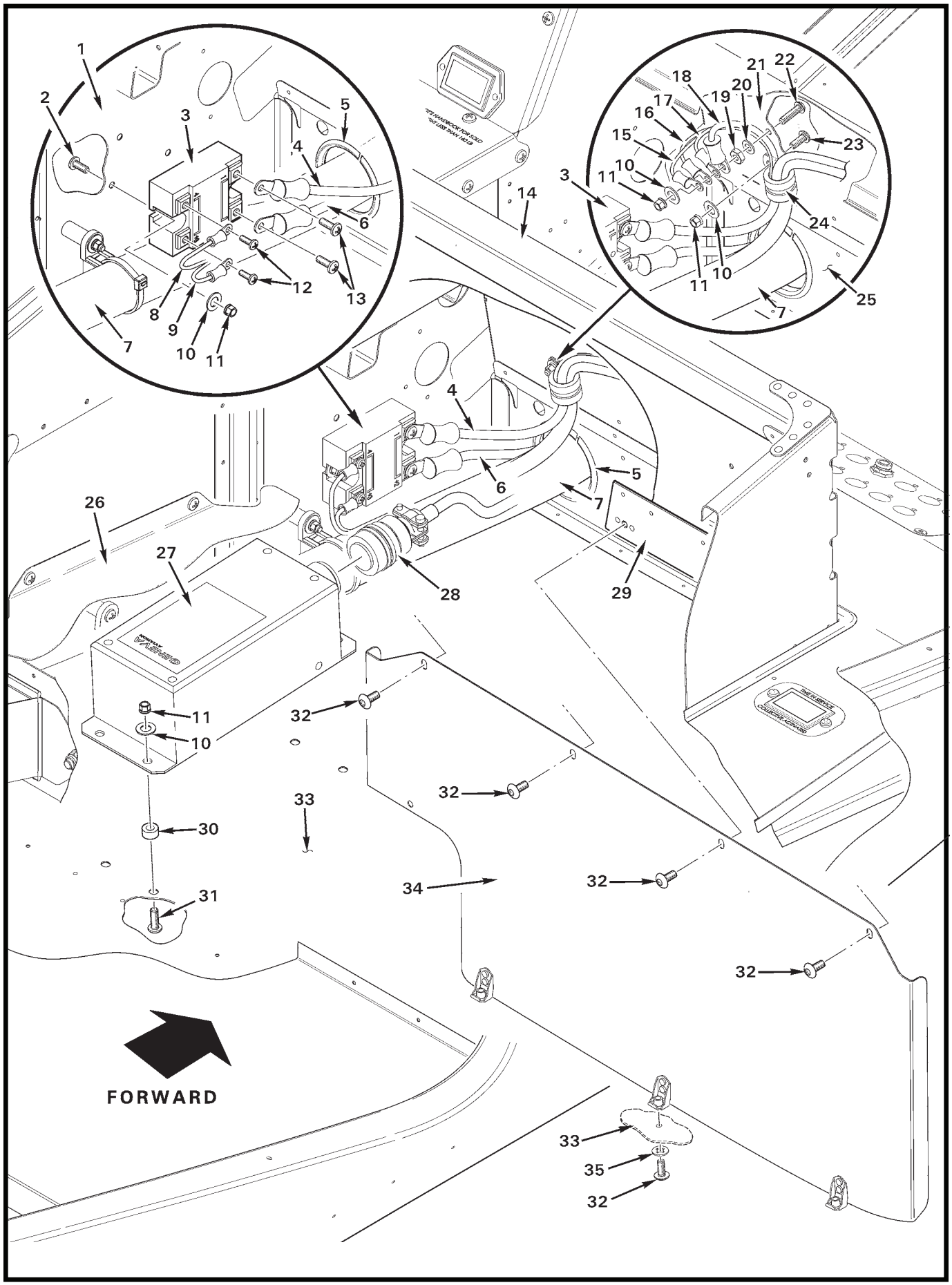
1
2
3
4
5
6
7
8
9
10
11
12
13
14
15
16
17
18
19
20
21
22
23
24
25
26
27
28
29
30
31
32
33
34
35
FORWARD

FIGURE AND INDEX NUMBER	PART NUMBER	DESCRIPTION	PARTS AVAIL	QTY PER ASSY
		G459 AUX ELECTRICAL SYSTEM – HARNESS ASSEMBLY		
92-75-1	F293-2	Keel Panel (RH, Ref)		
2	MS27039C0806	Screw	X	2
3	D06D100	Relay (Incl items 12 and 13)	X	1
4	G459-874*	Wire (Ref)		
5	NAS227-28	Grommet	X	1
6	A780-63	Cable Assembly (Ref)		
7	G459-1	Harness Assembly (Ref)		
8	G459-872*	Wire (Ref)		
9	G459-2406*	Wire (Ref)		
10	NAS1149FN816P	Washer	X	8
11	MS21042L08	Nut	X	8
12	—	Screw (small)	O	2
13	—	Screw (large)	O	2
14	F290-2	Support Assembly – Forward Seat (RH, Ref)		
15	G459-877*	Wire (Ref)		
16	G459-977*	Wire (Ref)		
17	G459-1142*	Wire (Ref)		
18	G459-2825*	Wire (Ref)		
19	B301-8	Nut	X	1
20	NAS1149DN832H	Washer	X	1
21	F352-2	Panel – Fwd (RH, Ref)		
22	B567-43	Screw	X	1
23	MS27039C0805	Screw	X	1
24	MS21919WDG__	Clamp (-4 thru -26 as required to prevent slack in harness)	X	1
25	G230-2	Bulkhead (RH, Ref)		
26	G702-11	Cover (Ref)		
27	G13053	Converter	X	1
28	D392-12	Harness Assembly	X	1
29	F362-5	Beam Assembly (Ref)		
30	A130-21	Spacer	X	4
31	MS27039C0809	Screw	X	4
32	B526-6	Screw	X	7
33	F272-1	Chin (Ref)		
34	G702-5	Cover Assembly (ENG)	X	1
	G702-9	Cover Assembly (SAS and ENG)	X	1

NOTES * See R66 MM §92 wiring diagrams.

Continues

FIGURE AND INDEX NUMBER	PART NUMBER	DESCRIPTION	PARTS AVAIL	QTY PER ASSY
		G459 AUX ELECTRICAL SYSTEM – HARNESS ASSEMBLY (Cont'd)		
92-75-35	B527-08	Washer	X	3

NOTES

Intentionally Blank

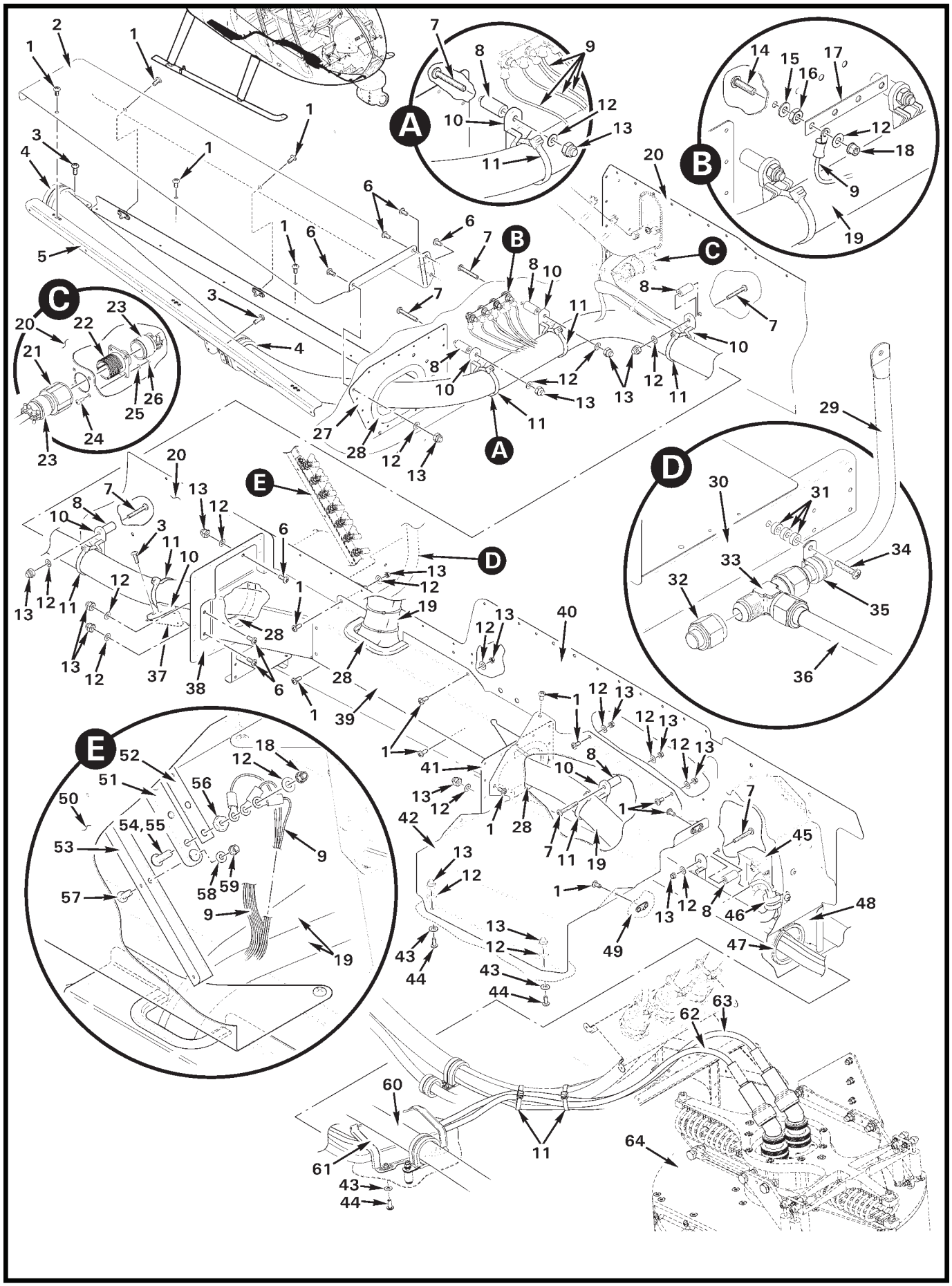

FIGURE 92-79 E.N.G. WIRE HARNESS INSTALLATION

FIGURE AND INDEX NUMBER	PART NUMBER	DESCRIPTION	PARTS AVAIL	QTY PER ASSY
		E.N.G. WIRE HARNESS INSTALLATION		
92-79-1	MS27039C0805	Screw	X	15
2	G701-1	Guard	X	1
3	MS27039C0807	Screw	X	3
4	MS21919WDG__	Clamp	X	2
5	G701-3	Angle Assembly (Ref)		
6	MS27039C0806	Screw	X	11
7	MS27039C819	Screw	X	5
8	C130-56	Spacer	X	5
9	G459*	Ground Wires (Ref)		
10	D268-2	Support	X	7
11	MS3367-7-0	Ty-rap	X	A/R
12	NAS1149FN816P	Washer	X	31
13	B340-4	Nut	X	15
14	B567-43	Screw	X	4
15	NAS1149DN832H	Washer	X	2
16	B301-8	Nut	X	4
17	A448-10	Bus Bar (4 holes)	X	1
18	MS21042L08	Nut	X	18
19	G459-1	Harness Assembly – Electrical (E.N.G.; Incl items 9, 21, and 23)	O	1
20	F292-2	Keel Panel (RH, aft; Ref)		
21	D38999/26FC	Plug	X	1
	B267-2	Terminator	X	A/R
	B158-8	Heat Shrink	X	A/R
	G459-1118*	Wire (Ref)		
	G459-1120*	Wire (Ref)		
	G459-1122*	Wire (Ref)		
	G459-1124*	Wire (Ref)		
	G459-1126*	Wire (Ref)		
	G459-1134*	Wire (Ref)		
	G459-1135*	Wire (Ref)		
	G459-1136*	Wire (Ref)		
	G459-1137*	Wire (Ref)		
	G459-1138*	Wire (Ref)		
	G459-1225*	Wire (Ref)		
	G459-1492*	Wire (Ref)		

NOTES * See R66 MM §92 wiring diagrams.

Continues

FIGURE AND INDEX NUMBER	PART NUMBER	DESCRIPTION	PARTS AVAIL	QTY PER ASSY
		E.N.G. WIRE HARNESS INSTALLATION (cont'd)		
92-79-22	38999/20FC	Receptacle	X	1
23	MS5049/38-13W	Backshell	X	2
24	MS35206-214	Screw	X	4
25	NAS620-4L	Washer	X	4
26	MS21042L04	Nut	X	4
27	G701-2	Doubler (Ref)		
28	A226-15	Trim	X	A/R
29	G392-3	Diffuser Assembly (Ref; see Figure 21-35)		
30	F375-2	Channel (Ref)		
31	A130-37	Spacer	X	3
32	AN929-8D	Cap	X	1
33	AN824-8D	Tee (Ref, see Figure 21-35)		
34	MS27039C813	Screw	X	1
35	MS21919WCH8	Clamp	X	1
36	G391-4	Line Assembly (Ref; see Figure 21-35)		
37	G701-9	Mount Assembly (Ref)		
38	G700-1	Doubler (Ref)		
39	G700-3	Cover Assembly	X	1
40	F293-2	Keel Panel (RH, Ref)		
41	G700-2	Doubler (Ref)		
42	G702-11	Cover	X	1
43	B527-08	Washer	X	6
44	B526-6	Screw	X	6
45	D06D100	Relay (Ref, see Figure 92-75)		
46	MS21919WDG	Clamp (Ref, see Figure 92-75)		
47	NAS557-28	Grommet	X	1
48	G230-2	Bulkhead (RH, Ref)		
49	G702	Cover Assembly (Ref, see Figure 92-75)		
50	G471-2	Panel Assembly (RH, aft console; Ref)		
51	C448-3	Block Assembly (Incl items 52, and 54 thru 56)	X	1
52	A448-14	Bus Bar (eight holes)	X	1
53	G307-7	Stiffener (Ref)		
54	B567-43	Screw (install using item 55)	X	8
55	B270-9	Adhesive	X	A/R
56	B301-8	Nut	X	8

NOTES

Continues

FIGURE AND INDEX NUMBER	PART NUMBER	DESCRIPTION	PARTS AVAIL	QTY PER ASSY
		E.N.G. WIRE HARNESS INSTALLATION (cont'd)		
92-79-57	MS35206-228	Screw	X	2
58	NAS620-6	Washer	X	2
59	MS21042L06	Nut	X	2
60	A785-39	Heater Hose (Ref; see Figure 21-33)		
61	G555-4	Shield Assembly	X	1
62	E204-6	Cable Assembly (Ref; see Figure 92-27)		
63	E195-2	Cable Assembly (Ref; see Figure 92-27)		
64	E801-1	Gimbal Assembly (Ref; see Figure 92-27)		

NOTES

Intentionally Blank

CHAPTER 95

INSTRUMENT SYSTEM

Figure	*Title*	*Page*
95-1	Garmin G500H Console – Instruments	95.0
95-5	Garmin G500H Console – GDU 620 Display	95.4
95-7	Garmin G500H Console – GDU 700L TXi Display	95.6
95-9	Garmin G500H Console – GDU 1060 TXi Display	95.8
95-11	Garmin G500H Console – Pitot/Static Tubes	95.10
95-13	Garmin G500H Console – Components	95.12
95-17	Aspen PFD Installation	95.16
95-19	Aspen PFD Installation – Pitot/Static Tubes	95.18
95-21	Aspen PFD and MFD Installation	95.20
95-25	Aspen PFD and MFD Installation – Pitot/Static Tubes	95.24
95-27	Eight-Instrument Console – Upper Panel	95.26
95-31	Eight-Instrument Console – Lower Panel	95.30
95-33	Eight-Instrument Console – Components	95.32
95-35	Seven-Instrument Console – Upper Panel	95.34
95-39	Seven-Instrument Console – Lower Panel	95.38
95-43	Nine-Instrument Console Assembly	95.42
95-45	Compass Installation	95.44
95-47	Pitot/Static Tubes Installation	95.46
95-51	Heated Pitot Installation	95.50

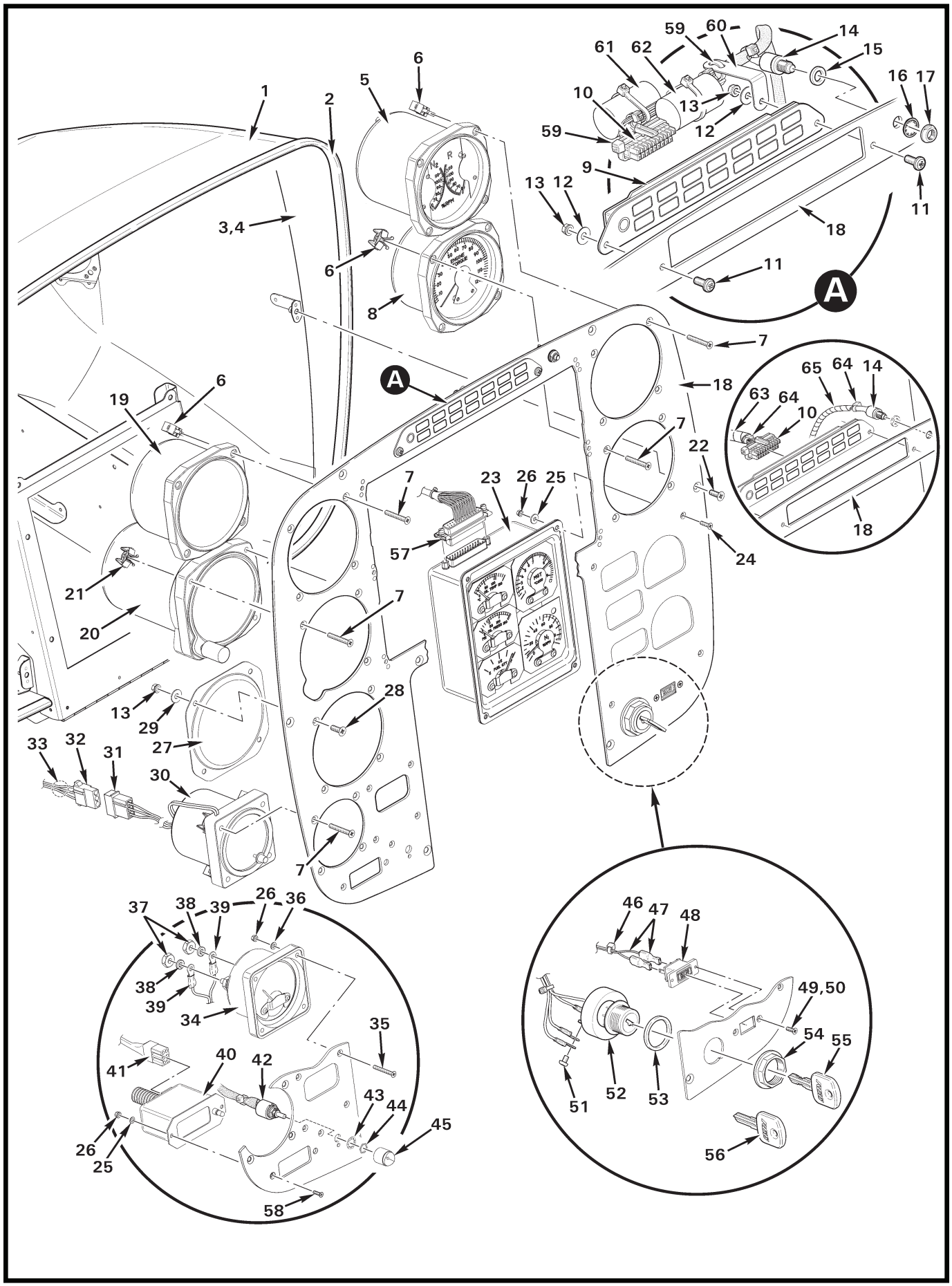
1
2
3,4
5
6
7
8
9
10
11
12
13
14
15
16
17
18
19
20
21
22
23
24
25
26
27
28
29
30
31
32
33
34
35
36
37
38
39
40
41
42
43
44
45
46
47
48
49,50
51
52
53
54
55
56
57
58
59
60
61
62
63
64
65
A

FIGURE AND INDEX NUMBER	PART NUMBER	DESCRIPTION	PARTS AVAIL	QTY PER ASSY
		GARMIN G500H CONSOLE – INSTRUMENTS		
95-1-1	G061	Shell Assembly (Ref)		
2	A226-11	Trim	X	A/R
3	G061-4	Liner (install using item 4)	X	1
4	B270-8qt	Adhesive	X	A/R
5	F792-1	Dual Tachometer	X	1
6	MS33737-15C	Nut	X	12
7	MS24693-S32	Screw	X	19
8	F600-2	Engine Torque Meter	X	1
9	G198-1	Panel – Annunciator	X	1
10	IPD1-10-D-P	Plug (Ref)		
11	MS35206-228	Screw	X	2
12	NAS1149FN616P	Washer	X	2
13	MS21042L06	Nut	X	A/R
14	B227-6	Switch Assembly (Incl items 15 thru 17)	X	1
15	94773A770	Washer	X	1
16	B227-3	Lockwasher	X	1
17	B227-4	Dress Nut	X	1
18	G065-1	Face Assembly (Ref)		
19	C599-2	Airspeed Indicator (140 knot V_{NE}, KM/H; rev. N or later)	X	1
	C599-2R	Airspeed Indicator (140 knot V_{NE}, KM/H; OH/EXCH)	X	A/R
	C599-1*	Airspeed Indicator (130 knot V_{NE}, KM/H; rev. N or later)	X	1
	C599-1R*	Airspeed Indicator (130 knot V_{NE}, KM/H; OH/EXCH)	X	A/R
	C599-3	Airspeed Indicator (259 KM/H V_{NE}, knots; optional, metric; rev. N or later)	X	1
	C599-3R	Airspeed Indicator (259 KM/H V_{NE}, knots; optional, metric; OH/EXCH)	X	A/R
	C599-6	Airspeed Indicator (241 KM/H V_{NE}, knots; optional, metric; rev. N or later)	X	1
	C599-6R	Airspeed Indicator (241 KM/H V_{NE}, knots; optional, metric; OH/EXCH)	X	A/R
	C599-7**	Airspeed Indicator (120 knot V_{NE}, KM/H; rev. N or later)	X	1
	C599-7R**	Airspeed Indicator (120 knot V_{NE}, KM/H; OH/EXCH)	X	A/R
20	A613-1	Altimeter	X	1
21	MS33737-13C	Nut	X	3
22	MS24694-S4	Screw	X	8
23	G144-6	Instrument Cluster	X	1

NOTES * Police Helicopter; Float equipped helicopter.

** Electronic News Gathering (E.N.G.) Helicopter.

Continues

FIGURE AND INDEX NUMBER	PART NUMBER	DESCRIPTION	PARTS AVAIL	QTY PER ASSY
		GARMIN G500H CONSOLE – INSTRUMENTS (Cont'd)		
95-1-24	MS24693-S5	Screw	X	4
25	NAS1149FN432P	Washer	X	6
26	MS21042L04	Nut	X	10
27	B190-6	Cover	X	A/R
28	MS24693-S27	Screw	X	A/R
29	NAS1149FN616P	Washer	X	A/R
30	A072-13	Clock Assembly	X	1
31	B263-14	Housing	X	1
	B263-1	Pin	X	3
32	B263-15	Housing	X	1
	B263-2	Socket	X	3
33	G717-133	Wire (Ref)		
	G717-134	Wire (Ref)		
	G717-137	Wire (Ref)		
34	G143-2	Ammeter (Incl item 37)	X	1
35	MS24693-S8	Screw	X	4
36	NAS620-4L	Washer	X	4
37	—	Nut	X	2
38	B332-42	Lockwasher	X	2
39	B260-3	Terminal	X	A/R
	G717-2312	Wire (Ref)		
	G717-2313	Wire (Ref)		
40	B341-1	Gage (OAT)	X	1
41	B341-4	Probe Assembly (OAT)	X	1
42	B398-1	Potentiometer (Ref)		
43	—	Lockwasher	O	1
44	—	Nut	O	1
45	MS91528-0C1B	Knob	X	1
46	MS3367-5-0	Ty-Rap	X	A/R
47	B262-1	Receptacle	X	2
	G717-2058	Wire (Ref)		
	G717-2275	Wire (Ref)		
48	G198-3	Indicator	X	1
49	MS24693-S4	Screw (install using item 50)	X	2
50	B270-20	Adhesive	X	A/R

NOTES

Continues

FIGURE AND INDEX NUMBER	PART NUMBER	DESCRIPTION	PARTS AVAIL	QTY PER ASSY
		GARMIN G500H CONSOLE – INSTRUMENTS (Cont'd)		
95-1-51	—	Screw (#8)	O	3
52	F661-2	Switch (Incl item 51 and 54)	X	1
53	C130-60	Spacer	X	1
54	—	Nut	O	1
55	R8096	Key – Duplicate (Specify ship S/N and "PK" numbers when ordering.)	X	1
56	D768-8	Key (blank; black plastic-coated "R66" Logo)	X	1
57	B269-12	Receptacle	X	1
58	MS24693-S4	Screw	X	2
59	MS3367-4-9	Ty-Rap	X	2
60	B181-12	Support	X	1
61	G655-2	Time Delay – Fuel Filter	X	1
62	G655-1	Time Delay – Low Fuel	X	1
63	B161-4*	Spirap	X	A/R
64	MS3367-4-9*	Ty-Rap	X	4
65	B161-2*	Spirap	X	A/R

NOTES * See R66 SB-15 for earlier aircraft.

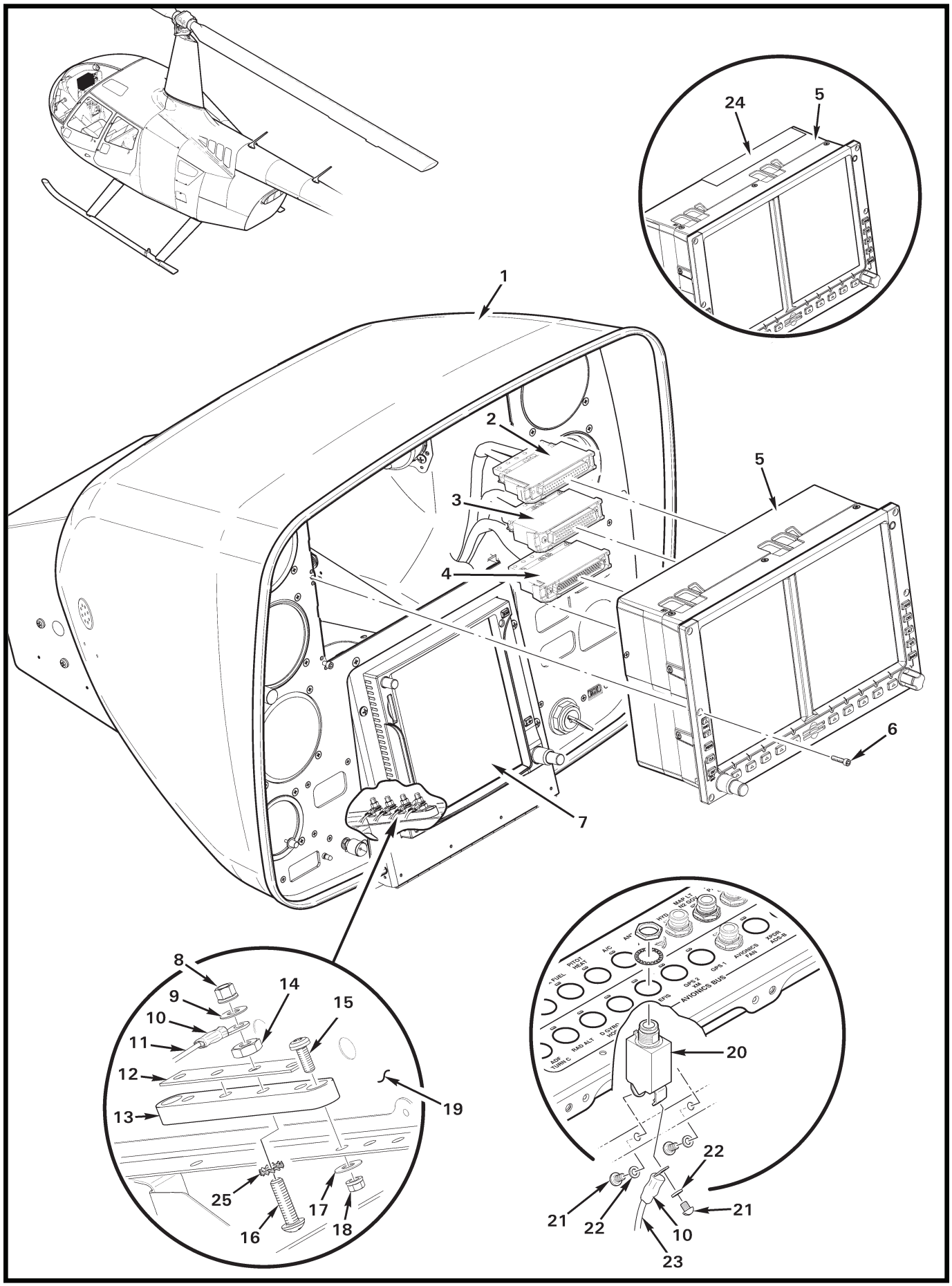
1
2
3
4
5
6
7
8
9
10
11
12
13
14
15
16
17
18
19
20
21
22
23
24
25
AVIONICS BUS

FIGURE AND INDEX NUMBER	PART NUMBER	DESCRIPTION	PARTS AVAIL	QTY PER ASSY
		GARMIN G500H CONSOLE – GDU 620 DISPLAY		
95-5-1	G060	Console Assembly (Ref)		
2	—	Connector (Ref)		
3	—	Connector (Ref)		
4	—	Connector (Ref)		
5	GDU 620*	Display (PFD and MFD; includes items 2 thru 4, and 6)	X	1
6	211-64307-14*	Screw	O	6
7	GTN 700*	GPS Navigator Display (Ref, or GTN 600-series display [not shown]. See Figure 97-1 for installation.)		
8	MS21042L08	Nut	X	1
9	NAS1149FN816P	Washer	X	1
10	-2564	Wire (ground, Ref)		
11	B260-2	Terminal	X	1
12	A448-10	Bus Bar (4 holes)	X	1
13	C448-5	Block (4 holes)	X	1
14	B301-8	Nut	X	1
15	MS35206-228	Screw	X	2
16	B567-43	Screw	X	1
17	NAS1149FN616P	Washer	X	2
18	MS21042L06	Nut	X	2
19	F033	Lower Console Assembly (Ref)		
20	B297-5	Circuit Breaker (5 amp, includes items 21 and 22)	X	1
21	—	Screw	O	2
22	—	Washer	O	2
23	-2563	Wire (power, Ref)		
24	A701-5	Tape (earlier ships; see R66 SB-15)	X	A/R
25	91120A130	Washer	X	1

NOTES * Garmin part no.

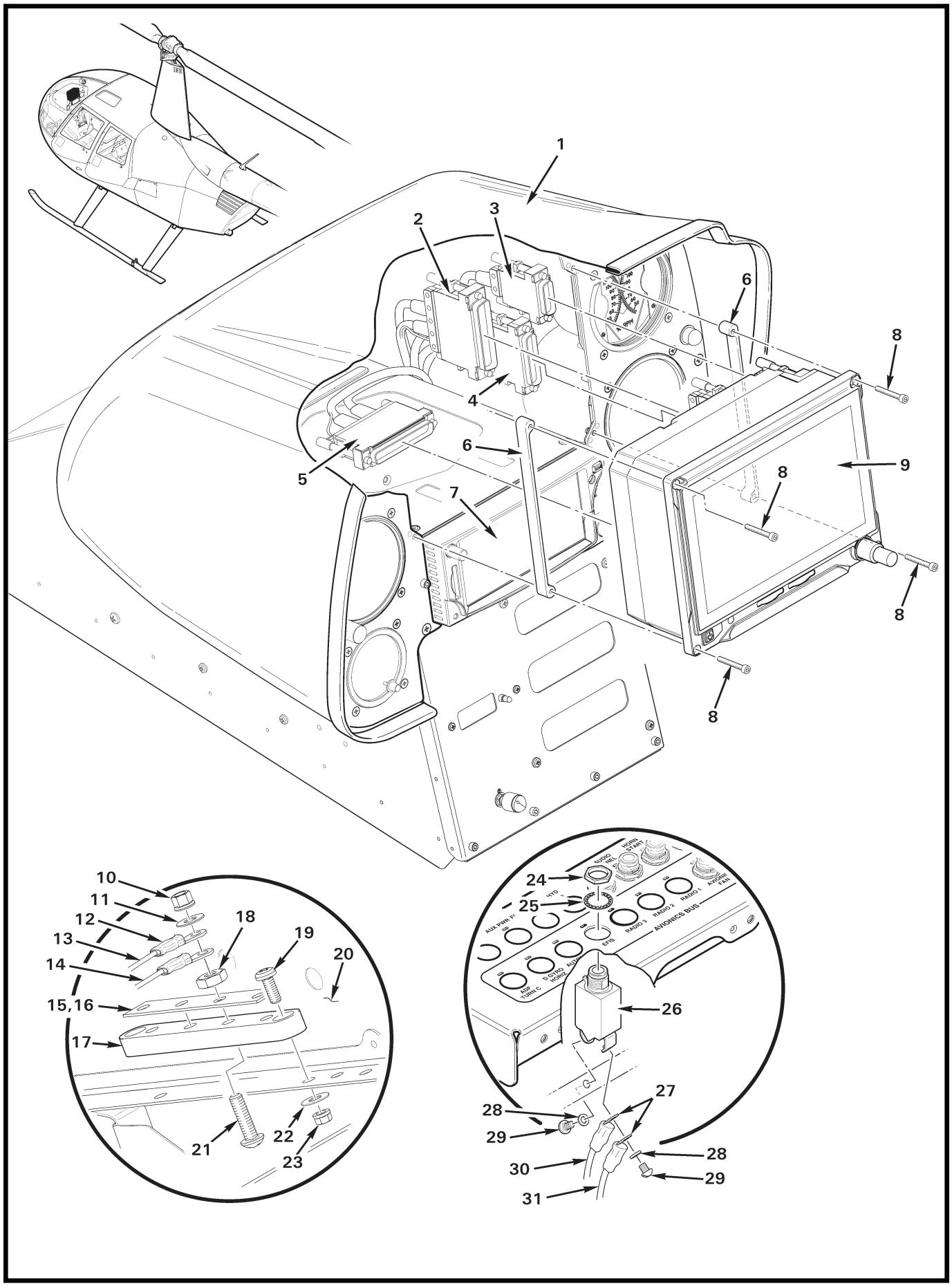
1
2
3
4
5
6
6
7
8
8
8
8
9
10
11
12
13
14
15,16
17
18
19
20
21
22
23
24
25
26
27
27
28
28
29
29
30
31
AUDIO
HORN
LIGHT
AUX PWR
HYD
RADIO 3
RADIO 2
RADIO 1
AVIONICS FAN
AVIONICS BUS
SERVO
AUX
ADF
TURN C
D SYNC
HORIZ

FIGURE AND INDEX NUMBER	PART NUMBER	DESCRIPTION	PARTS AVAIL	QTY PER ASSY
		GARMIN G500H CONSOLE – GDU 700L TXi DISPLAY		
95-7-1	G070	Console Assembly (Ref)		
2	—	Connector (Ref; "J4")		
3	—	Connector (Ref; "J1")		
4	—	Connector (Ref; "J2")		
5	—	Connector (Ref; "J3")		
6	A356-14	Spacer	X	2
7	GTN 625*	GPS (Ref; See Figure 97-1 for installation.)		
	GTN 635*	GPS/COM (Ref; See Figure 97-1 for installation.)		
	GTN 650*	GPS/NAV/COM (Ref; See Figure 97-1 for installation.)		
8	211-64307-14*	Screw (or NAS1352-06-16)	O	4
9	GDU 700L TXi*	Display (PFD and MFD; includes items 2 thru 6)	X	1
10	MS21042L08	Nut	X	1
11	NAS1149FN816P	Washer	X	1
12	B260-3	Terminal	X	1
13	-2564	Wire (Ref;ground, GDU 700L TXi display)		
14	-2589	Wire (Ref;ground, GSU 75 ADAHRS)		
15	C448-2	Terminal Block Assembly (Incl items 16 thru 18, and 21)	X	1
16	A448-10	Bus Bar (4 holes)	X	1
17	C448-5	Block (4 holes)	X	1
18	B301-8	Nut	X	1
19	MS35206-228	Screw	X	2
20	F033	Lower Console Assembly (Ref)		
21	B567-43	Screw (B270-9 adhesive under screw head)	X	1
22	NAS1149FN616P	Washer	X	2
23	MS21042L06	Nut	X	2
24	—	Nut	O	1
25	—	Washer	O	2
26	B297-5	Circuit Breaker (5 amp, includes items 24, 25,28 and 29)	X	1
27	B260-2	Terminal	X	2
28	—	Washer	O	2
29	—	Screw	O	2
30	-2563	Wire (Ref; power, GDU 700L TXi display)		
31	-2695	Wire (Ref; power, GSU 75 ADAHRS)		

NOTES * Garmin part no.

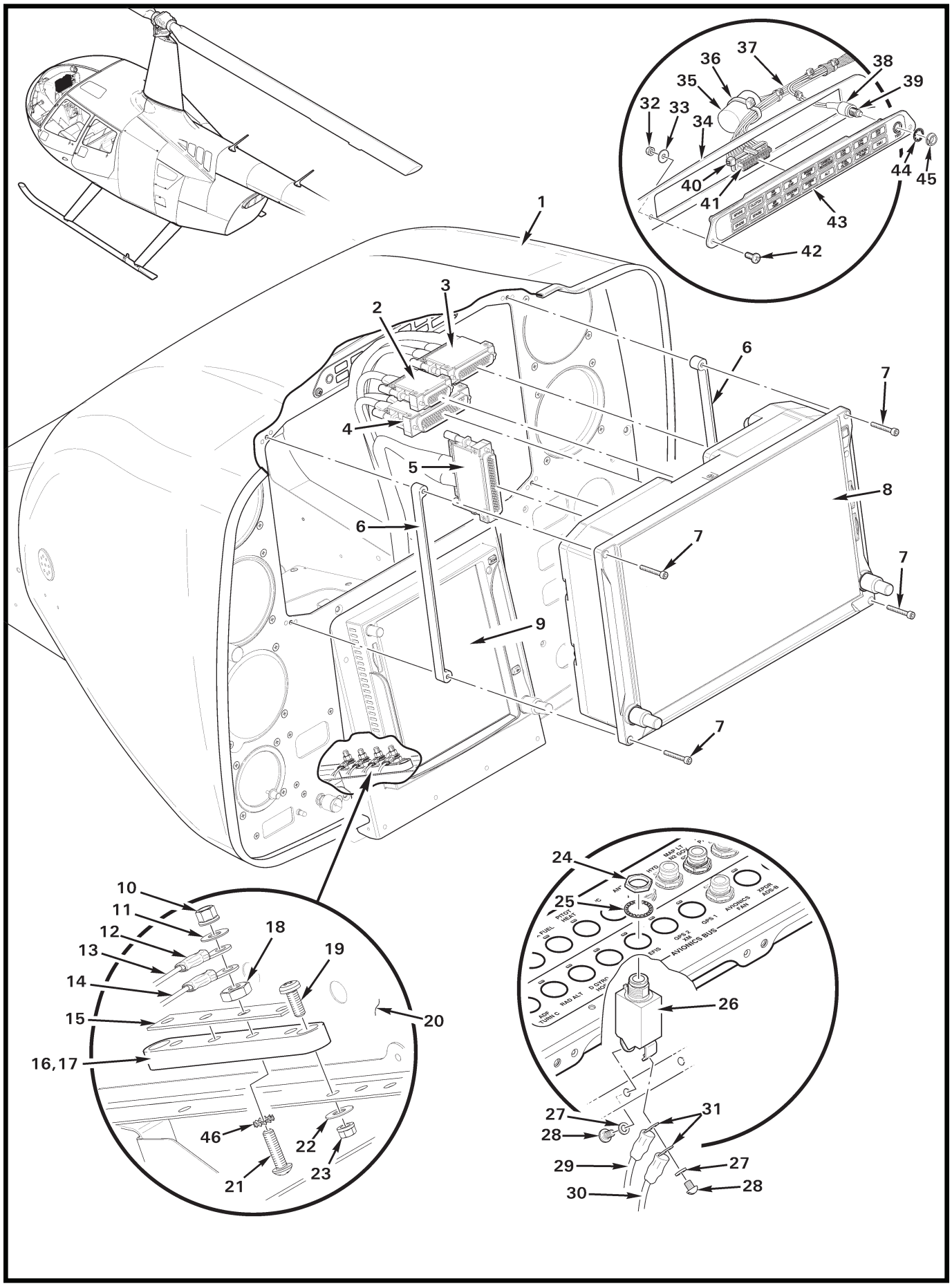
1
2
3
4
5
6
7
8
9
10
11
12
13
14
15
16,17
18
19
20
21
22
23
24
25
26
27
28
29
30
31
32
33
34
35
36
37
38
39
40
41
42
43
44
45
46
MAP LT
DE-ICE
P
HYD
AIR
PITOT
HEAT
FUEL
GPS 2
GPS 1
AVIONICS
FAN
XPDR
ADS-B
EFIS
AVIONICS BUS
D STRC
ICS
RAD ALT
AIR
CURN C

FIGURE AND INDEX NUMBER	PART NUMBER	DESCRIPTION	PARTS AVAIL	QTY PER ASSY
		GARMIN G500H CONSOLE – GDU 1060 TXi DISPLAY		
95-9-1	G060	Console Assembly (Ref)		
2	—	Connector (Ref; "J1")		
3	—	Connector (Ref; "J2")		
4	—	Connector (Ref; "J4")		
5	—	Connector (Ref; "J3")		
6	A356-15	Spacer	X	1
7	211-64307-14*	Screw (or NAS1352-06-16)	O	4
8	GDU 1060 TXi*	Display (PFD and MFD; includes items 2 thru 5, and 7)	X	1
9	GTN 750Xi*	GPS/NAV/COM (Ref; See Figure 97-1 for installation.)		
	GTN 725Xi*	GPS (Ref; See Figure 97-1 for installation. Not shown.)		
	GTN 650Xi*	GPS/NAV/COM – Single (Ref; See Figure 97-1 for installation. Not shown.)		
	GTN 635Xi*	GPS/COM – Single (Ref; See Figure 97-1 for installation. Not shown.)		
	GTN 625Xi*	GPS (Ref; See Figure 97-1 for installation. Not shown.)		
10	MS21042L08	Nut	X	1
11	NAS1149FN816P	Washer	X	1
12	B260-3	Terminal	X	1
13	-2564	Wire (Ref;ground, GDU 1060 TXi display)		
14	-2589	Wire (Ref;ground, GSU 75 ADAHRS)		
15	A448-10	Bus Bar (4 holes)	X	1
16	C448-2	Terminal Block (4 holes; incl items 15,17, 18, 21 and 46)	X	1
17	C448-5	Block (4 holes)	X	1
18	B301-8	Nut	X	4
19	MS35206-228	Screw	X	2
20	F033	Lower Console Assembly (Ref)		
21	B567-43	Screw	X	4
22	NAS1149FN616P	Washer	X	2
23	MS21042L06	Nut	X	2
24	—	Nut	O	1
25	—	Washer	O	2
26	B297-5	Circuit Breaker (5 amp, includes items 24, 25, 27 and 28)	X	1
27	—	Lockwasher	O	2
28	—	Screw (6-32 x 3/16 or 1/4 inch as required)	O	2
29	-2563	Wire (Ref; power, GDU 1060 TXi display)		

NOTES * Garmin part no.

Continues

FIGURE AND INDEX NUMBER	PART NUMBER	DESCRIPTION	PARTS AVAIL	QTY PER ASSY
		GARMIN G500H CONSOLE – GDU 1060 TXi DISPLAY (Cont'd)		
95-9-30	-2695	Wire (Ref; power, GSU 75 ADAHRS)		
31	B260-2	Terminal	X	2
32	MS21042L06	Nut	X	2
33	NAS1149FN616P	Washer	X	2
34	G065	Face Assembly (Ref)		
35	G655-2	Time Delay Assembly – Fuel Filter	X	1
36	MS3367-5-0	Ty-Rap	X	1
37	G717-04	Harness Assembly – Console (Ref)		
38	B158-6	Heat Shrink	X	A/R
39	B227-6	Switch Assembly (Incl items 44 and 45)	X	1
40	MS3367-4-9	Ty-Rap	X	2
41	IPD1-12-D-P	Plug	X	1
	CC79L-2024-01-F	Socket	X	20
42	MS35206-228	Screw	X	2
43	G198-6	Panel – Annunciator (standard)	X	1
	G198-7	Panel – Annunciator (lithium battery installed, not shown)	X	1
44	B227-3	Lockwasher	X	1
45	B227-4	Dress Nut	X	1
46	91120A130	Washer	X	4

NOTES

Intentionally Blank

1
2
3
3
4
5
5
6
7
8
9
10
10
11
11

FIGURE AND INDEX NUMBER	PART NUMBER	DESCRIPTION	PARTS AVAIL	QTY PER ASSY
		GARMIN G500H CONSOLE – PITOT/STATIC TUBES		
95-11-1	G060	Console Assembly (Ref)		
2	C599	Airspeed Indicator (Ref)		
3	10-4-2-N-0	Fitting	X	2
4	A729-27	Tube	X	1
5	A729-23	Tube	X	2
6	50-4-N-0	Elbow	X	1
7	A613-1	Altimeter (Ref)		
8	A729-70	Tube	X	1
9	60-4-2-N-0	Tee	X	1
10	15-4-N-0	Union	X	2
11	A729-28	Tube	X	2

NOTES

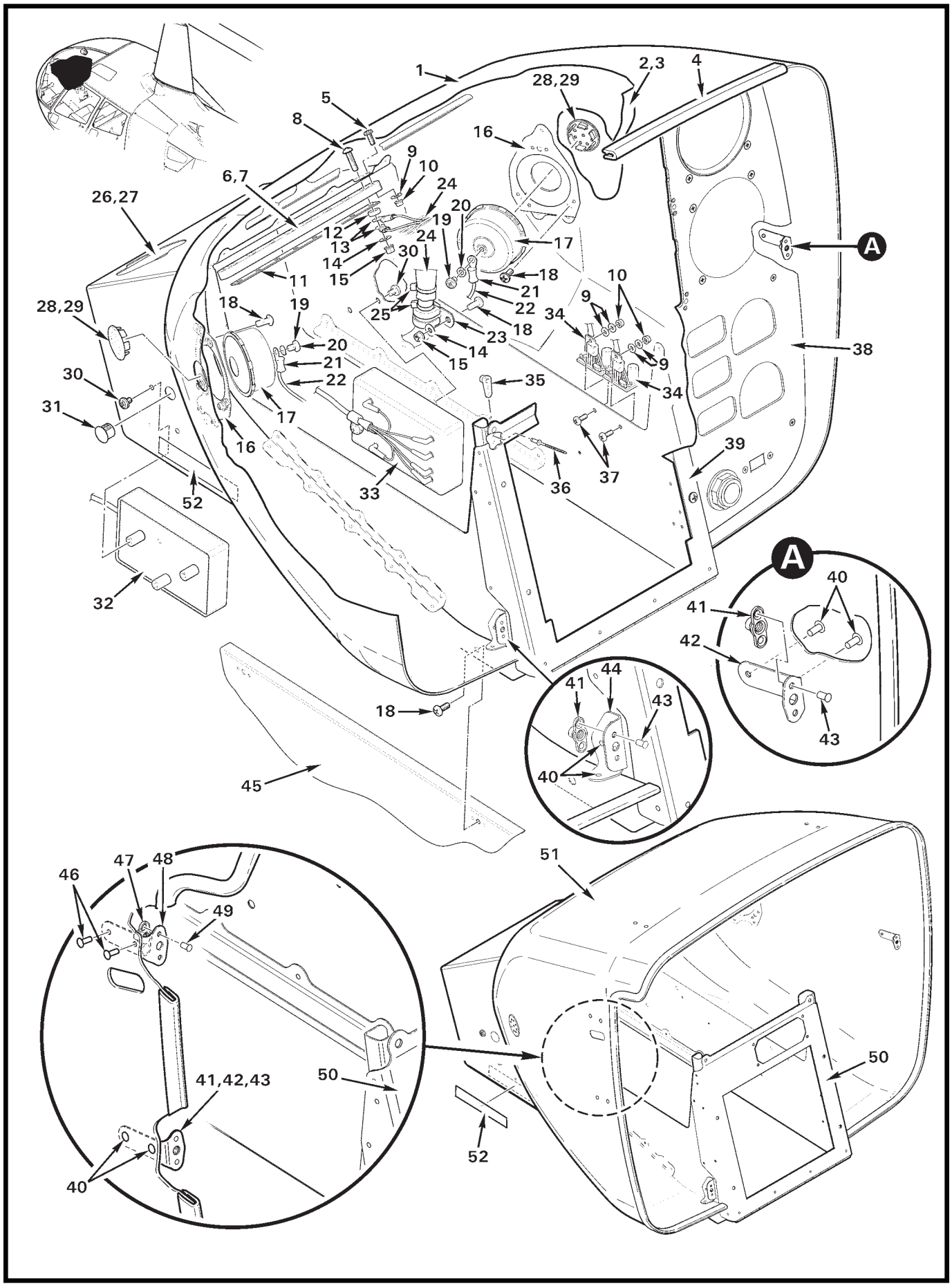

FIGURE 95-13 GARMIN G500H CONSOLE – COMPONENTS

FIGURE AND INDEX NUMBER	PART NUMBER	DESCRIPTION	PARTS AVAIL	QTY PER ASSY
		GARMIN G500H CONSOLE – COMPONENTS		
95-13-1	G061-1	Shell Assembly (Garmin GTN 600-series GPS installed. Includes items 2 thru 4, 16, 28, 29, 35, 36, and 39 thru 44.)	X	1
	G061-2	Shell Assembly (Garmin GTN 600-series GPS installed. Includes items 2 thru 4, 16, 28, 29, 35, 36, and 39 thru 44.)	X	1
	G061-3	Shell Assembly (Garmin GTN 700-series GPS installed. Includes items 2 thru 4, 16, 28, 29, 35, 36, and 39 thru 44.)	X	1
2	G061-4	Liner (vinyl, install using item 3)	X	1
3	B270-8qt	Adhesive	X	A/R
4	A226-11	Trim	X	A/R
5	MS53206-228	Screw	X	2
6	C448-3	Block Assembly (Incl items 7, 8,11, and 12)	X	1
7	C448-6	Block	X	1
8	B567-43	Screw (install using B270-9 adhesive)	X	8
9	NAS620-6	Washer	X	6
10	MS21042L06	Nut	X	4
11	A448-14	Bus Bar (8 holes)	X	1
12	B301-8	Nut	X	8
13	B260-2	Terminal	X	18
14	NAS1149FN816P	Washer	X	9
15	MS21042L08	Nut	X	9
16	C479-1	Mount Assembly (Ref)		
17	B320-3	Horn Assembly (includes items 19 thru 22, and 1-pin connector)	X	2
18	MS27039C0806	Screw	X	11
19	MS35206-241	Screw	X	1
20	B332-42	Lock Washer	X	1
21	B260-3	Terminal	X	2
22	B320-79	Wire (Ref)		
23	MS21919WDG_	Clamp (clamp size as required to prevent play in wire harness installation)	X	1
24	G717-01	Wire Harness Assembly (Ref; includes items 13, 25, and 34)		
25	MS3367-5-9	Ty-Rap	X	A/R
26	A226-3	Seal (install using item 27)	X	A/R
27	B270-13	Sealant	X	A/R
28	9688K643	Hole Plug (install using item 29)	X	2
29	B270-18	Adhesive	X	A/R

NOTES

Continues

FIGURE AND INDEX NUMBER	PART NUMBER	DESCRIPTION	PARTS AVAIL	QTY PER ASSY
		GARMIN G500H CONSOLE – COMPONENTS (Cont'd)		
95-13-30	MS35206-241	Screw	X	6
31	2633	Hole Plug	X	1
32	A569-11	Low RPM Warning Unit (includes connector)	X	1
33	B395-1	Dimmer Assembly (includes connector)	X	1
34	D359-1	Regulator Assembly	X	2
35	MS21071L08	Nutplate	X	2
36	MS20605R3W2	Rivet (blind)	X	4
37	MS35206-228	Screw	X	2
38	G065	Face Assembly (Ref)		
39	G064	Face Assembly (Ref)		
40	MS20470AD3	Rivet	X	16
41	MS21069L08	Nutplate	X	6
42	B181-6	Angle	X	4
43	NAS1097AD3	Rivet	X	12
44	B181-11	Angle (RH, install using item 40 [4])	X	1
	B181-10	Angle (LH, install using item 40 [4], not shown)	X	1
45	F033	Lower Console Assembly (Ref)		
46	MS20470AD3	Rivet	X	2
47	MS21069L08	Nutplate	X	1
48	B181-6	Angle	X	1
49	NAS1097AD3	Rivet	X	2
50	G064-7	Face Assembly (Ref)		
51	G061-5	Shell Assembly (Police Helicopter. Technisonic TDFM-9000 transceiver installed. Includes items 2 thru 4, 16, 28, 29, 35, 36, 39 thru 44, and 46 thru 50.)	X	1
52	G682-25	Decal – "BEFORE LIFTING CONSOLE..."	X	1

NOTES

Intentionally Blank

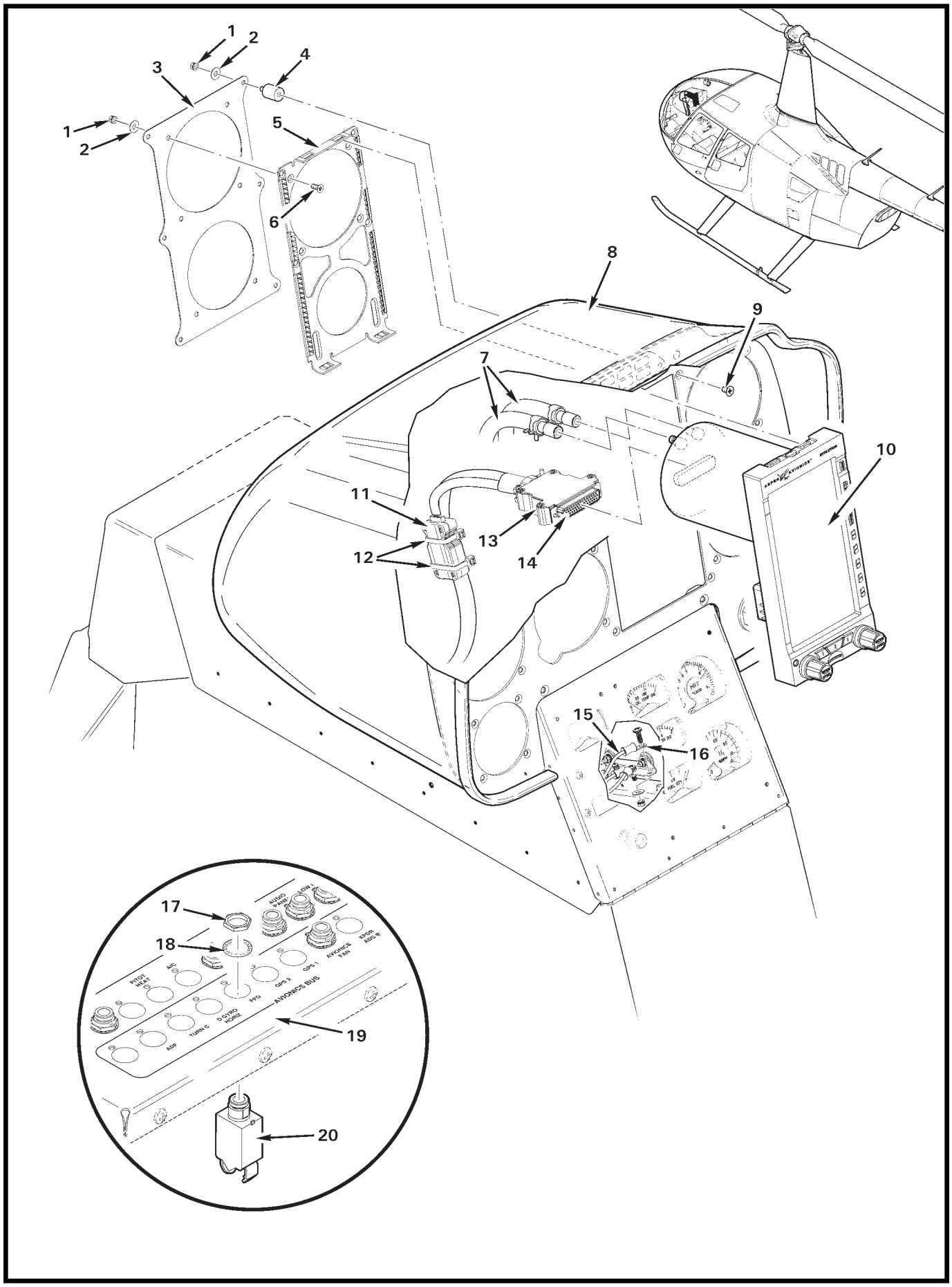

FIGURE 95-17 ASPEN PFD INSTALLATION

FIGURE AND INDEX NUMBER	PART NUMBER	DESCRIPTION	PARTS AVAIL	QTY PER ASSY
		ASPEN PFD INSTALLATION		
95-17-1	MS21042L06	Nut	X	12
2	NAS1149FN616P	Washer	X	12
3	C801-1	Panel	X	1
4	248-00002-001	Isolator	O	6
5	403-00003-001	Bracket	O	1
6	MS24693-S26	Screw	X	6
7	A729-48	Tube (Ref, see Figure 95-19)		
8	G050-8	Console Assembly (Ref)		
9	MS24693-S24	Screw	X	6
10	910-00001-104	Module (PFD, Aspen)	O	1
11	920-00004-117	Module	O	1
12	MS3367-4-9	Ty-Rap	X	2
13	116-00026-006	Backshell	O	1
14	116-00022-002	Connector	O	1
15	-2557	Wire (Ref; ground)		
16	B260-3	Terminal	X	1
17	—	Nut	O	1
18	—	Lockwasher	O	1
19	F490	Circuit Breaker Panel (Ref)		
20	B297-7	Circuit Breaker (7.5 amp, includes items 17 and 18)	X	1

NOTES

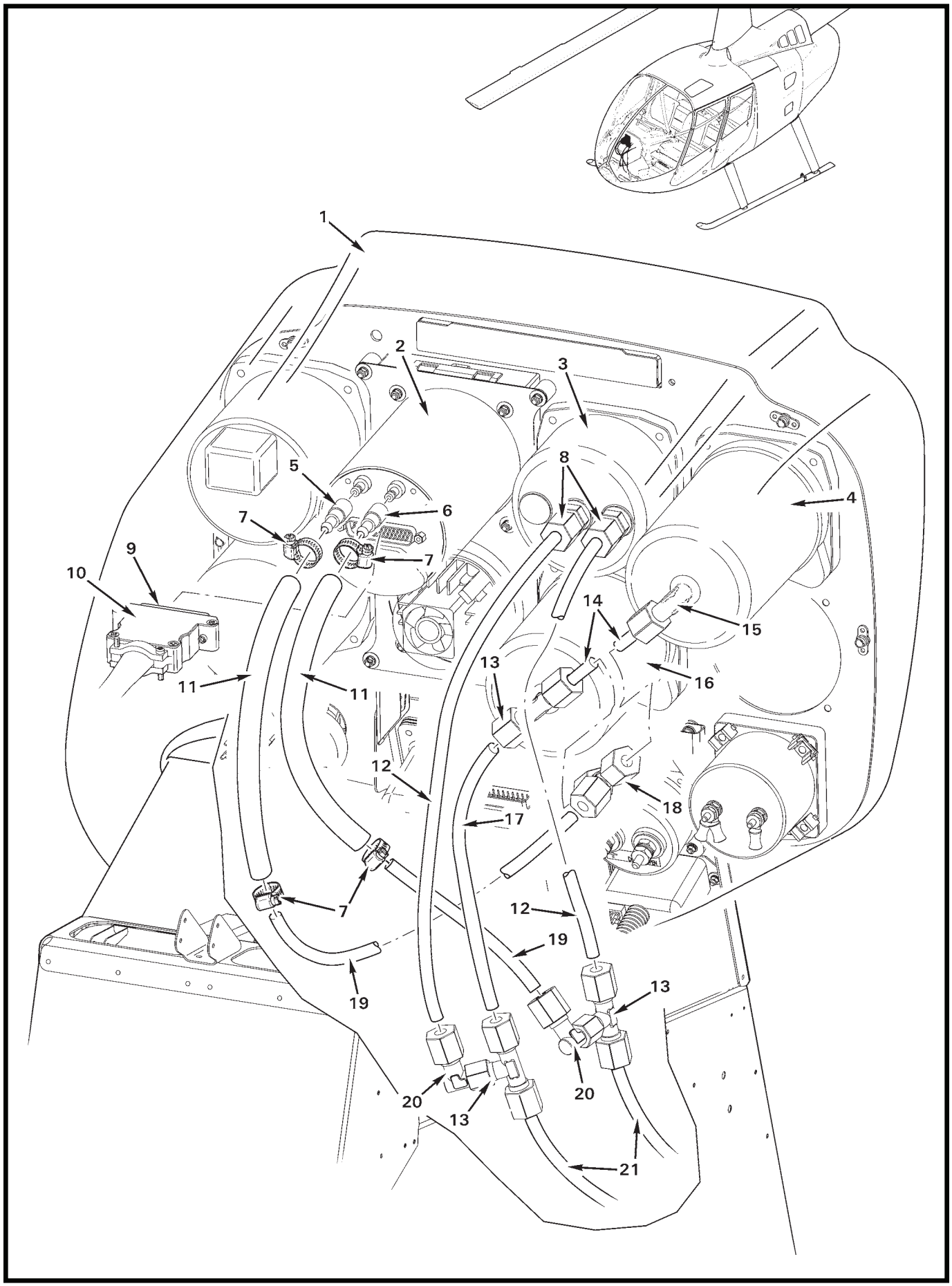
1
2
3
4
5
6
7
7
7
8
9
10
11
11
12
12
13
13
13
14
15
16
17
18
19
19
20
20
21

FIGURE AND INDEX NUMBER	PART NUMBER	DESCRIPTION	PARTS AVAIL	QTY PER ASSY
		ASPEN PFD INSTALLATION – PITOT/STATIC TUBES		
95-19-1	G050-8	Console Assembly (Ref)		
2	910-00001-104	Module (PFD, Aspen)	O	1
3	C599	Airspeed Indicator (Ref)		
4	A602-1	Rate-of-Climb Indicator (Ref)		
5	275-00001-001	Coupler (static)	O	1
6	275-00001-002	Coupler (pitot)	O	1
7	271-00001-001	Clamp	0	4
8	10-4-2-N-0	Fitting	X	2
9	116-00022-002	Connector	O	1
10	116-00026-006	Backshell	O	1
11	A729-48	Tube	X	2
12	A729-23	Tube	X	2
13	60-4-2-N-0	Tee	X	3
14	A729-27	Tube	X	2
15	40-4-2-N-0	Elbow	X	1
16	A613	Altimeter (Ref, see Figure 95-1)		
17	A729-25	Tube	X	1
18	70-4-N-0	Tee	X	1
19	A729-52	Tube	X	1
20	45-4-2-N-0	Elbow	X	2
21	A729-28	Tube	X	2

NOTES

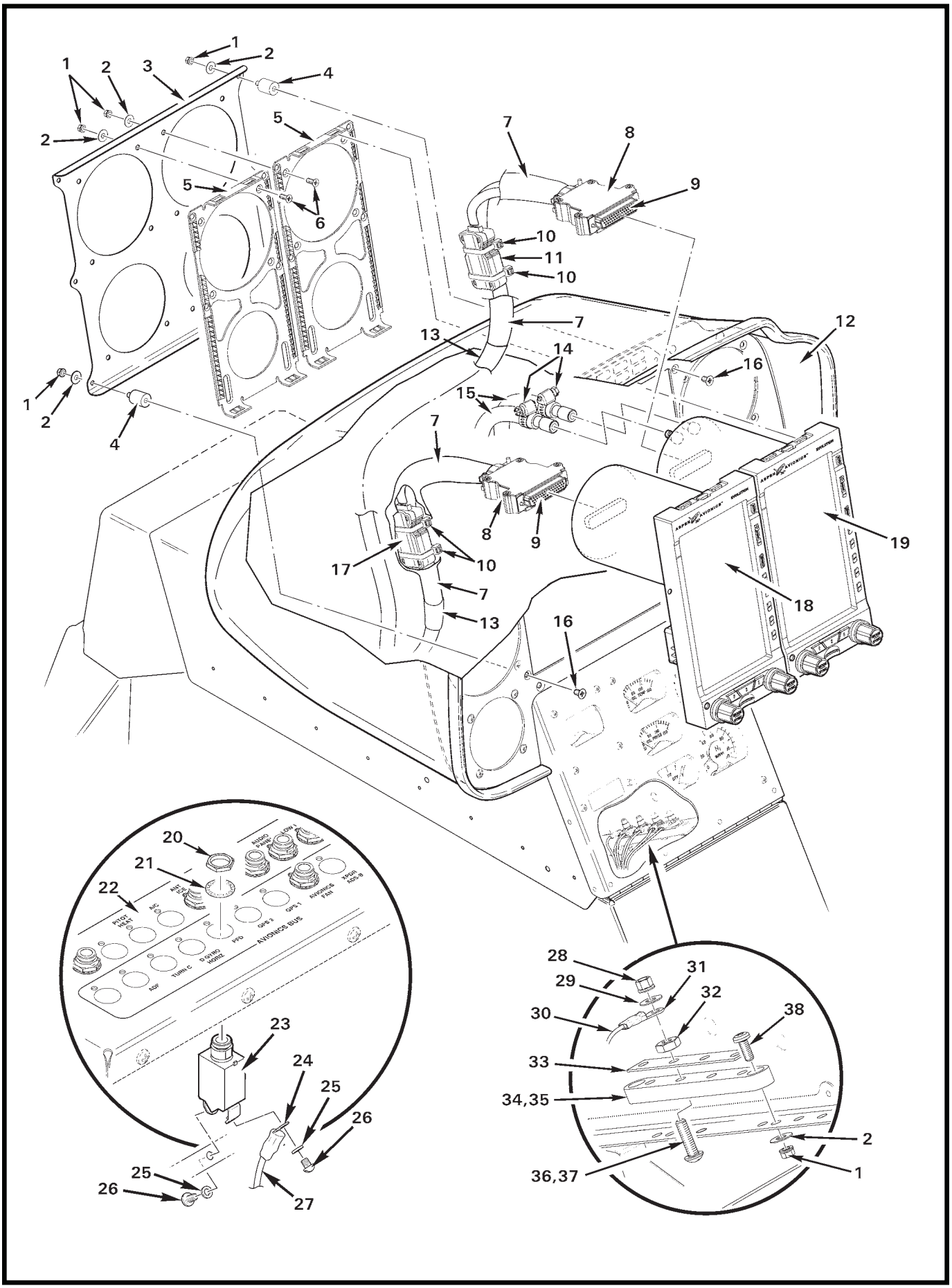
1
2
3
4
5
6
7
8
9
10
11
12
13
14
15
16
17
18
19
20
21
22
23
24
25
26
27
28
29
30
31
32
33
34,35
36,37
38
AVIONICS BUS
AUDIO PANEL
LOW I
AVIONICS FAN
XPDR ADS-B
AUDIO PANEL
DC
PFD
GPS 2
GPS 1
TURN C
D GYRO AOA2
ADF

FIGURE AND INDEX NUMBER	PART NUMBER	DESCRIPTION	PARTS AVAIL	QTY PER ASSY
		ASPEN PFD AND MFD INSTALLATION		
95-21-1	MS21042L06	Nut	X	18
2	NAS1149FN616P	Washer	X	18
3	C801-2	Plate	X	1
4	248-00002-001	Isolator	O	6
5	403-00003-001	Bracket	O	2
6	MS24693-S26	Screw	X	12
7	B274-607	Braid (tin-plated copper)	X	A/R
8	116-00026-006	Backshell	O	2
9	116-00022-002	Connector	O	2
10	MS3367-4-9	Ty-Rap	X	4
11	920-00004-117	Configuration Module	O	1
12	G050-8	Console Assembly (Ref)		
13	7861K46	Heat Shrink	O	2
14	271-00001-001	Clamp	O	4
15	A729-48	Tube (Ref, see Figure 95-25)		
16	MS24693-S24	Screw	X	6
17	920-00004-105	Configuration Module	O	1
18	910-00001-102	Module (MFD, Aspen)	O	1
19	910-00001-104	Module (PFD, Aspen)	O	1
20	—	Nut	O	1
21	—	Lockwasher	O	1
22	F490-1	Circuit Breaker Panel (Ref)		
23	B297-7	Circuit Breaker (7.5 amp, includes items 20, 21, 25, and 26)	X	1
24	B260-2	Terminal	X	1
25	—	Washer	O	2
26	—	Screw	O	2
27	-2555	Wire (Ref, power)		
28	MS21042L08	Nut	X	1
29	NAS1149FN816P	Washer	X	1
30	-2557	Wire (Ref; ground)		
31	B260-3	Terminal	X	1
32	B301-8	Nut	X	1
33	A448-10	Bus Bar (4 hole)	X	1
34	C448-2	Block Assembly (Incl items 32, 33, and 35 thru 37)	X	1
35	C448-5	Block	X	1

NOTES

Continues

FIGURE AND INDEX NUMBER	PART NUMBER	DESCRIPTION	PARTS AVAIL	QTY PER ASSY
		ASPEN PFD/MFD INSTALLATION (Cont'd)		
95-21-36	B567-43	Screw (install using item 37)	X	1
37	B270-9	Adhesive	X	A/R
38	MS35206-228	Screw	X	2

NOTES

Intentionally Blank

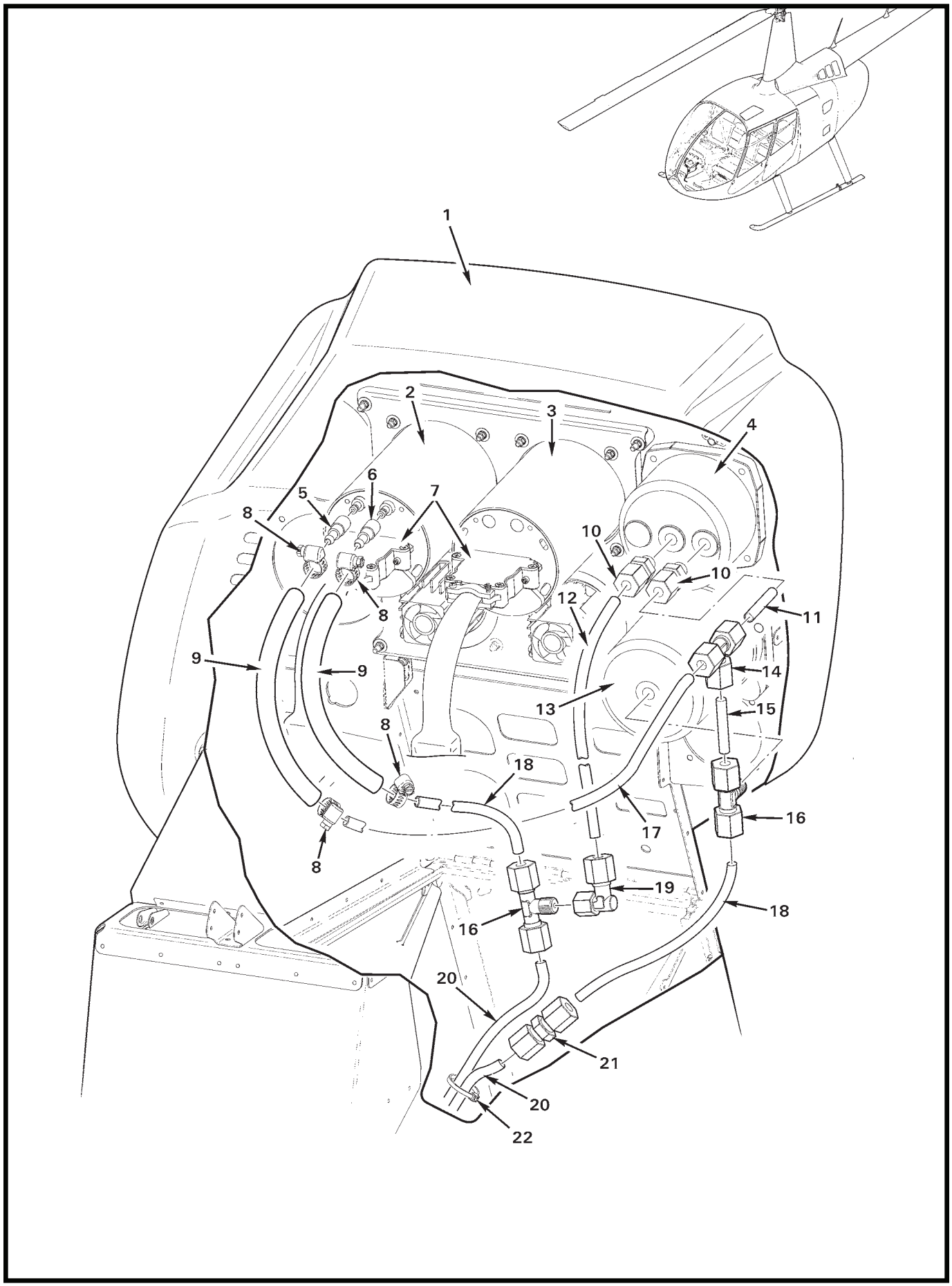
1
2
3
4
5
6
7
8
8
8
8
9
9
10
10
11
12
13
14
15
16
16
17
18
18
19
20
20
21
22

FIGURE AND INDEX NUMBER	PART NUMBER	DESCRIPTION	PARTS AVAIL	QTY PER ASSY
		ASPEN PFD AND MFD INSTALLATION – PITOT/STATIC TUBES		
95-25-1	G050-8	Console Assembly (Ref)		
2	910-00001-104	Module (Ref; PFD, Aspen)		
3	910-00001-102	Module (Ref; MFD, Aspen)		
4	C599	Airspeed Indicator (Ref)		
5	275-00001-001	Coupler (static)	O	1
6	275-00001-002	Coupler (pitot)	O	1
7	116-00022-002	Connector (Ref)		
	116-00026-006	Backshell (Ref)		
8	271-00001-001	Clamp	O	4
9	A729-48	Tube	X	2
10	10-4-2-N-0	Fitting	X	2
11	A729-69	Tube	X	1
12	A729-23	Tube	X	1
13	A613-1	Altimeter (Ref, see Figure 95-27)		
14	70-4-N-0	Tee	X	1
15	A729-70	Tube	X	1
16	60-4-2-N-0	Tee	X	2
17	A729-25	Tube	X	1
18	A729-52	Tube	X	2
19	45-4-2-N-0	Elbow	X	1
20	A729-28	Tube (Ref)		
21	15-4-N-0	Union	X	1
22	MS3367-5-9	Ty-Rap	X	A/R

NOTES

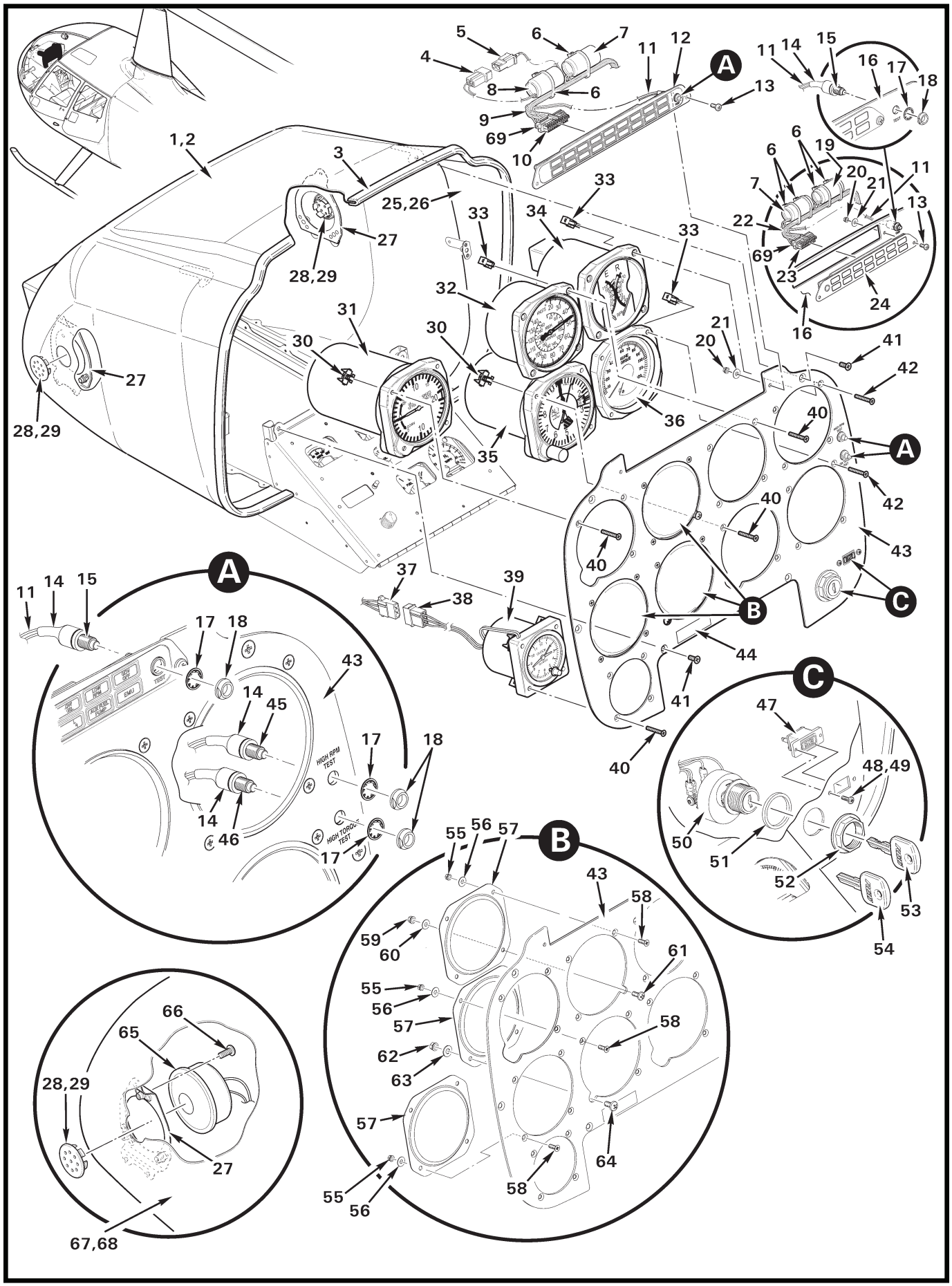

FIGURE 95-27 EIGHT-INSTRUMENT CONSOLE – UPPER PANEL

FIGURE AND INDEX NUMBER	PART NUMBER	DESCRIPTION	PARTS AVAIL	QTY PER ASSY
		EIGHT-INSTRUMENT CONSOLE – UPPER PANEL		
95-27-1	G050-22	Console Assembly – Low (Incl items 2, 9, 12, 13, 20, 21, 30 thru 36, 39 thru 44, 47, 48, 49, and 55 thru 64)	X	1
2	G051-23	Shell Assembly (Incl items 3, and 25 thru 29)	X	1
3	A226-11	Trim (retaining rib on inside)	X	A/R
4	B263-12	Housing	X	1
	B263-1	Pin	X	2
5	B263-13	Housing (Ref)		
	B263-2	Socket (Ref)		
6	MS3367-5-0	Ty-Rap	X	A/R
7	G655-2	Time Delay Assembly (fuel filter warning)	X	1
8	G655-4	Time Delay Assembly (12 gal. fuel warning; includes item 4)	X	1
9	G716-03	Harness Assembly – Console (Incl items 6, 7, 8, 11, 14, 15, 37, and 50)	X	1
10	IPD1-12-D-P	Plug	X	1
	CC79L-2024-01-F	Socket	X	20
11	G716-2005	Wire (Ref, to test switch)		
	G716-2029	Wire (Ref, to test switch)		
	G716-3066	Wire (Ref, to test switch)		
12	G198-6	Annunciator Panel	X	1
	G198-7	Annunciator Panel (lithium battery installed)	X	1
	G198-1*	Annunciator Panel (spares)	X	1
13	MS35206-228	Screw	X	2
14	B158-6	Heat Shrink	X	A/R
15	B227-6	Switch – Test (Incl items 17 and 18)	X	1
16	G055-6	Face	X	1
17	B227-3	Lockwasher	X	1
18	B227-4	Dress Nut	X	1
19	G655-1*	Time Delay Assembly (low fuel warning)	X	1
20	MS21042L06	Nut	X	2
21	NAS1149FN616P	Washer	X	2
22	G716-02*	Harness Assembly – Console (Ref)		
23	IPD1-10-D-P*	Plug	X	1
	CC79L-2024-01-F*	Socket	X	16
24	G198-1	Annunciator Panel	X	1
25	G051-10	Liner (install using item 26)	X	A/R
26	B270-8qt	Adhesive	X	A/R

NOTES * Earlier aircraft.

Continues

FIGURE AND INDEX NUMBER	PART NUMBER	DESCRIPTION	PARTS AVAIL	QTY PER ASSY
		EIGHT-INSTRUMENT CONSOLE – UPPER PANEL (Cont'd)		
95-27-27	C479-1	Mount Assembly (Ref)		
28	9688K643	Hole Plug (install using item 29 between plug and shell)	X	2
29	B270-18	Adhesive	X	A/R
30	MS33737-13C	Nut	X	6
31	A602-1	Rate-of-Climb Indicator	X	1
32	C599-2	Airspeed Indicator (140 knot V_{NE}, KM/H)	X	1
	C599-1	Airspeed Indicator (130 knot V_{NE}, KM/H; Police and ENG)	X	1
	C599-3	Airspeed Indicator (259 KM/H V_{NE}, knots; optional, metric)	X	1
	C599-6	Airspeed Indicator (241 KM/H V_{NE}, knots; optional, metric)	X	1
33	MS33737-15C	Nut	X	12
34	F792-2	Dual Tachometer (with audio alert)	X	1
	F792-1*	Dual Tachometer (without audio alert; install using items 33 and 40)	X	1
35	A613-1	Altimeter	X	1
36	F600-3	Engine Torque Meter (with audio alert)	X	1
	F600-2*	Engine Torque Meter (without audio alert; install using items 33 and 40)	X	1
37	B263-15	Housing	X	1
	B263-2	Socket	X	3
38	B263-14	Housing	X	1
	B263-1	Pin	X	3
39	A072-13	Clock Assembly (Incl item 38)	X	1
40	MS24693-S32	Screw	X	22
41	MS24694-S4	Screw	X	6
42	MS24693-S29	Screw	X	8
43	G055-14	Face	X	1
44	A743-1	Call Letters Plate (specify call letters; install using A701-7)	X	A/R
45	B227-6	Switch Assembly – High RPM Test (Incl items 17 and 18)	X	1
46	B227-6	Switch Assembly – High Torque Test (Incl items 17 and 18)	X	1
47	G198-3	Indicator (rotor brake)	X	1
48	MS24693-S4	Screw (install using item 49)	X	2
49	B270-20	Adhesive	X	A/R
50	F661-2	Switch – Ignition (Incl item 52)	X	1
51	C130-60	Spacer	X	1
52	—	Nut	O	1

NOTES * Earlier aircraft.

Continues

FIGURE AND INDEX NUMBER	PART NUMBER	DESCRIPTION	PARTS AVAIL	QTY PER ASSY
		EIGHT-INSTRUMENT CONSOLE – UPPER PANEL (Cont'd)		
95-27-53	D768-8	Key (blank; black plastic-coated "R66" logo)	X	1
54	R8428	Key – Duplicate (specify ship S/N and "PK" numbers when ordering)	X	1
55	MS21042L06	Nut	X	A/R
56	NAS1149FN616P	Washer	X	A/R
57	B190-6	Cover	X	A/R
58	MS24693-S27	Screw	X	A/R
59	MS21042L08	Nut	X	A/R
60	NAS1149FN816P	Washer	X	A/R
61	MS27039C0806	Screw	X	A/R
62	D210-3	Nut	X	A/R
63	NAS1149F0332P	Washer	X	A/R
64	MS27039C1-06	Screw	X	A/R
65	B320-6*	Horn Assembly	X	2
	B320-3*	Horn Assembly	X	2
66	MS27039C0806	Screw	X	6
67	G050-8*	Console Assembly – Low (Ref)	X	1
68	G051-9*	Shell Assembly (Ref)	X	1
69	MS3367-4-9	Ty-Rap	X	2

NOTES * Earlier aircraft.

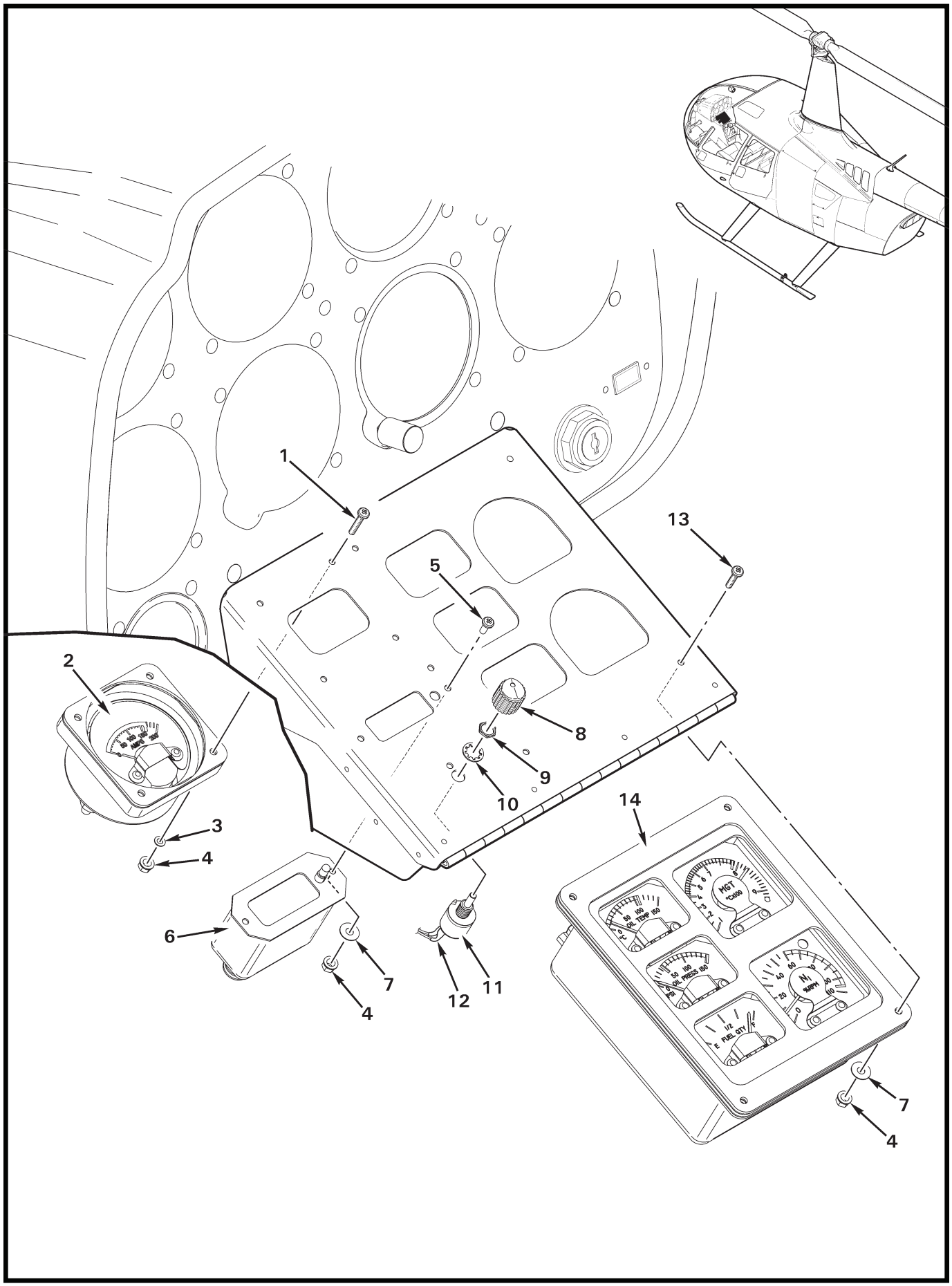
1
2
3
4
5
6
7
8
9
10
11
12
13
14
OIL TEMP
OIL PRESS
FUEL QTY
MGT
N1
%RPM

FIGURE AND INDEX NUMBER	PART NUMBER	DESCRIPTION	PARTS AVAIL	QTY PER ASSY
		EIGHT-INSTRUMENT CONSOLE – LOWER PANEL		
95-31-1	MS35206-219	Screw	X	4
2	G143-2	Ammeter	X	1
3	NAS620-4L	Washer	X	4
4	MS21042L04	Nut	X	10
5	MS35206-214	Screw	X	2
6	B341-1	Gage – Outside Air Temperature	X	1
7	NAS1149FN432P	Washer	X	6
8	MS91528-0C1B	Knob	X	1
9	—	Nut	O	1
10	—	Lockwasher	O	1
11	B398-1	Potentiometer (Incl items 9 and 10)	X	1
12	B158-2	Heat Shrink	X	A/R
13	MS35206-217	Screw	X	4
14	G144-6	Instrument Cluster	X	1

NOTES

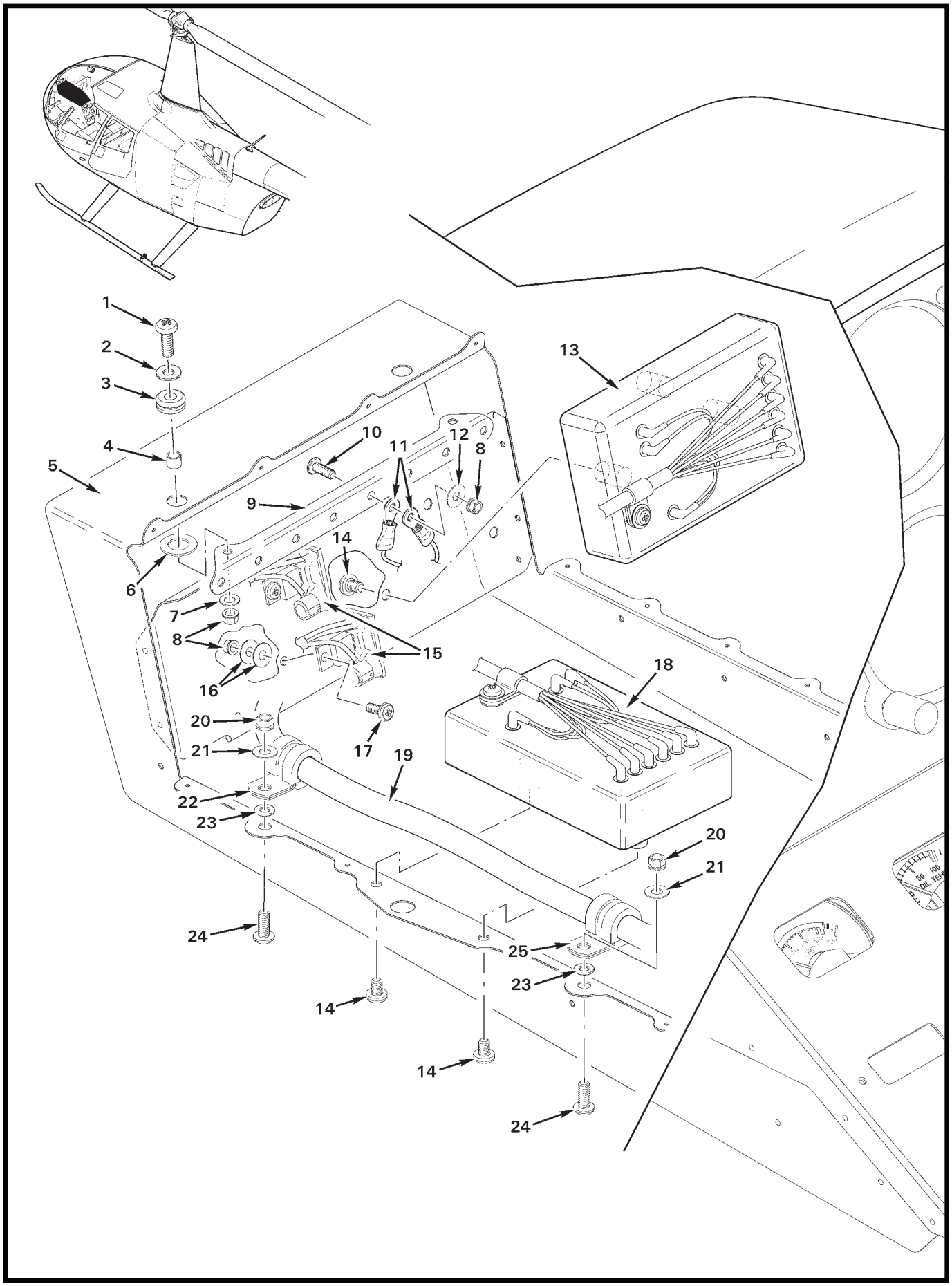
1
2
3
4
5
6
7
8
9
10
11
12
8
13
14
15
16
17
18
19
20
21
22
23
24
14
14
24
25
23
20
21

FIGURE AND INDEX NUMBER	PART NUMBER	DESCRIPTION	PARTS AVAIL	QTY PER ASSY
		EIGHT-INSTRUMENT CONSOLE – COMPONENTS		
95-33-1	MS35206-230	Screw	X	2
2	NAS1149FN632P	Washer	X	2
3	MS35489-4	Grommet	X	2
4	C130-59	Spacer	X	2
5	G050-8	Console Assembly (Ref)		
6	NAS1149F0532P	Washer	X	2
7	NAS620-6L	Washer	X	2
8	MS21042L06	Nut	X	12
9	A448-18	Bus Bar (8-hole)	X	1
10	B567-25	Screw	X	8
11	B260-2	Terminal	X	20
12	NAS1149FN616P	Washer	X	8
13	B395-1	Dimmer Assembly (includes connector)	X	1
14	MS35206-241	Screw	X	8
15	D359-1	Voltage Regulator (Ref)	O	2
16	NAS620-6	Washer	X	4
17	MS35206-228	Screw	X	2
18	A569-11	Low RPM Warning Unit (includes connector)	X	1
19	G716-02	Console Harness Assembly (Ref; includes items 11 and 15)		
20	MS21042L08	Nut	X	2
21	NAS1149FN816P	Washer	X	2
22	MS21919WDG6	Clamp	X	1
23	NAS620-8	Washer	X	2
24	MS27039C0807	Screw	X	2
25	MS21919WDG7	Clamp	X	1

NOTES

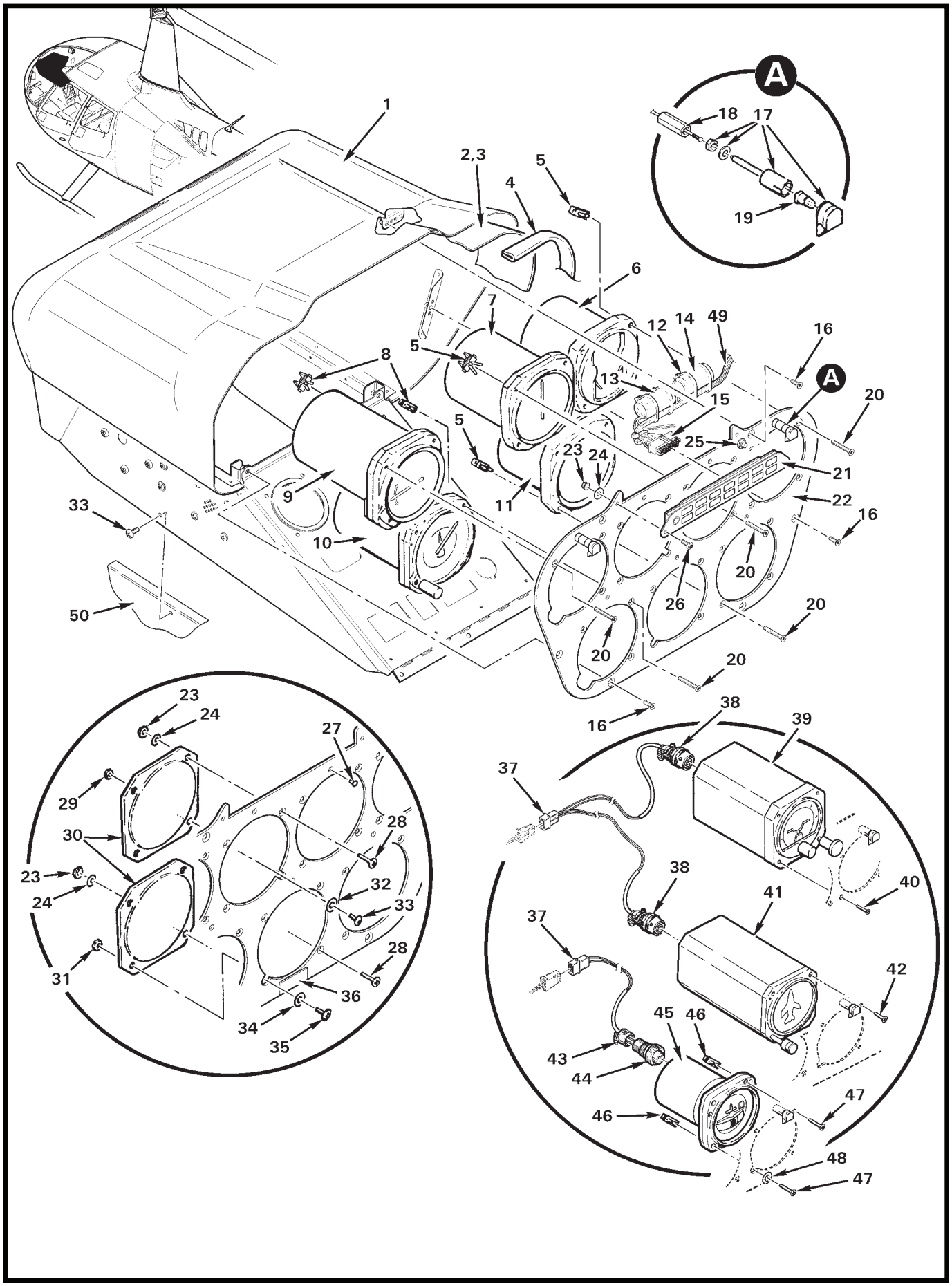
A
1
2,3
4
5
6
7
8
9
10
11
12
13
14
15
16
17
18
19
20
21
22
23
24
25
26
27
28
29
30
31
32
33
34
35
36
37
38
39
40
41
42
43
44
45
46
47
48
49
50

FIGURE AND INDEX NUMBER	PART NUMBER	DESCRIPTION	PARTS AVAIL	QTY PER ASSY
		SEVEN-INSTRUMENT CONSOLE – UPPER PANEL		
95-35-1	B051-18	Shell Assembly – Console (Incl items 2 thru 4)	X	1
2	B051-4	Visor Liner (install using item 3)	X	1
3	B270-8qt	Adhesive	X	A/R
4	A226-11	Trim	X	A/R
5	MS33737-15C	Nut	X	12
6	F792-1	Engine/Rotor Tachometer	X	1
7	C599-2	Airspeed Indicator (140 knot V_{NE}, KM/H)	X	1
	C599-1	Airspeed Indicator (130 knot V_{NE}, KM/H)	X	1
	C599-3	Airspeed Indicator (259 KM/H V_{NE}, knots; optional, metric)	X	1
	C599-6	Airspeed Indicator (241 KM/H V_{NE}, knots; optional, metric)	X	1
8	MS33737-13C	Nut	X	6
9	A602-1	Rate-of-Climb Indicator	X	1
10	A613-1	Altimeter (in.-Hg)	X	1
	A613-2	Altimeter (feet/Milibar, optional)	X	1
11	F600-2	Torque Meter	X	1
12	MS3367-4-9	Ty-Rap	X	A/R
13	G655-2	Time Delay Assembly (fuel filter warning)	X	1
14	G655-1	Time Delay Assembly (low fuel warning)	X	1
15	IPD1-10-D-P	Plug	X	1
	CC79L-2024-01-F	Socket	X	16
16	MS24694-S4	Screw	X	6
17	B195-11	Post Light (Incl item 19)	X	2
18	B195-9	Connector Nut	X	A/R
19	B196-21	Lamp (#327)	X	1
20	MS24693-S32	Screw	X	18
21	G198-1	Annunciator Panel	X	1
22	B197-6	Face	X	1
	B197-7	Face (with HSI, not shown)	X	1
23	MS21042L06	Nut	X	6
24	NAS1149FN616P	Washer	X	6
25	B227-6	Switch (test)	X	1
26	MS35206-228	Screw	X	2
27	2590	Hole Plug	X	5
28	MS24693-S27	Screw	X	6
29	MS21042L08	Nut	X	1

NOTES

Continues

FIGURE AND INDEX NUMBER	PART NUMBER	DESCRIPTION	PARTS AVAIL	QTY PER ASSY
		SEVEN-INSTRUMENT CONSOLE – UPPER PANEL (Cont'd)		
95-35-30	B190-5	Cover – "R66" Logo	X	A/R
	B190-6	Cover (no logo)	X	A/R
31	MS21042L3	Nut	X	1
32	NAS1149FN816P	Washer	X	3
33	MS27039C0806	Screw	X	1
34	NAS1149F0332P	Washer	X	1
35	MS27039C1-06	Screw	X	1
36	A743-1	Call Letters Plate (specify call letters)	X	A/R
37	B263-12	Housing	X	1
	B263-1	Pin	X	2
38	MS3116F8-4S	Plug	X	1
39	B823-10	Attitude Indicator	O	1
	B823-12	Attitude Indicator with Inclinometer	X	1
40	MS24693-S30	Screw	X	3
41	B823-11	Directional Gyro	X	1
42	MS24693-S28	Screw	X	1
43	MS3057-4A	Strain Relief	X	1
44	MS3106A-10SL-3S	Plug	X	1
45	B329-1	Turn Coordinator	X	1
46	MS33737-12C	Nut	X	4
47	MS24693-S32	Screw	X	4
48	AS42193-2-017-24A	Washer (countersunk, required for enlarged hole)	X	1
49	G716-01	Harness Assembly (Ref; includes items 12, 13, 15, and 18. No longer available.)	O	1
50	F033	Lower Console Assembly (Ref)		

NOTES

Intentionally Blank

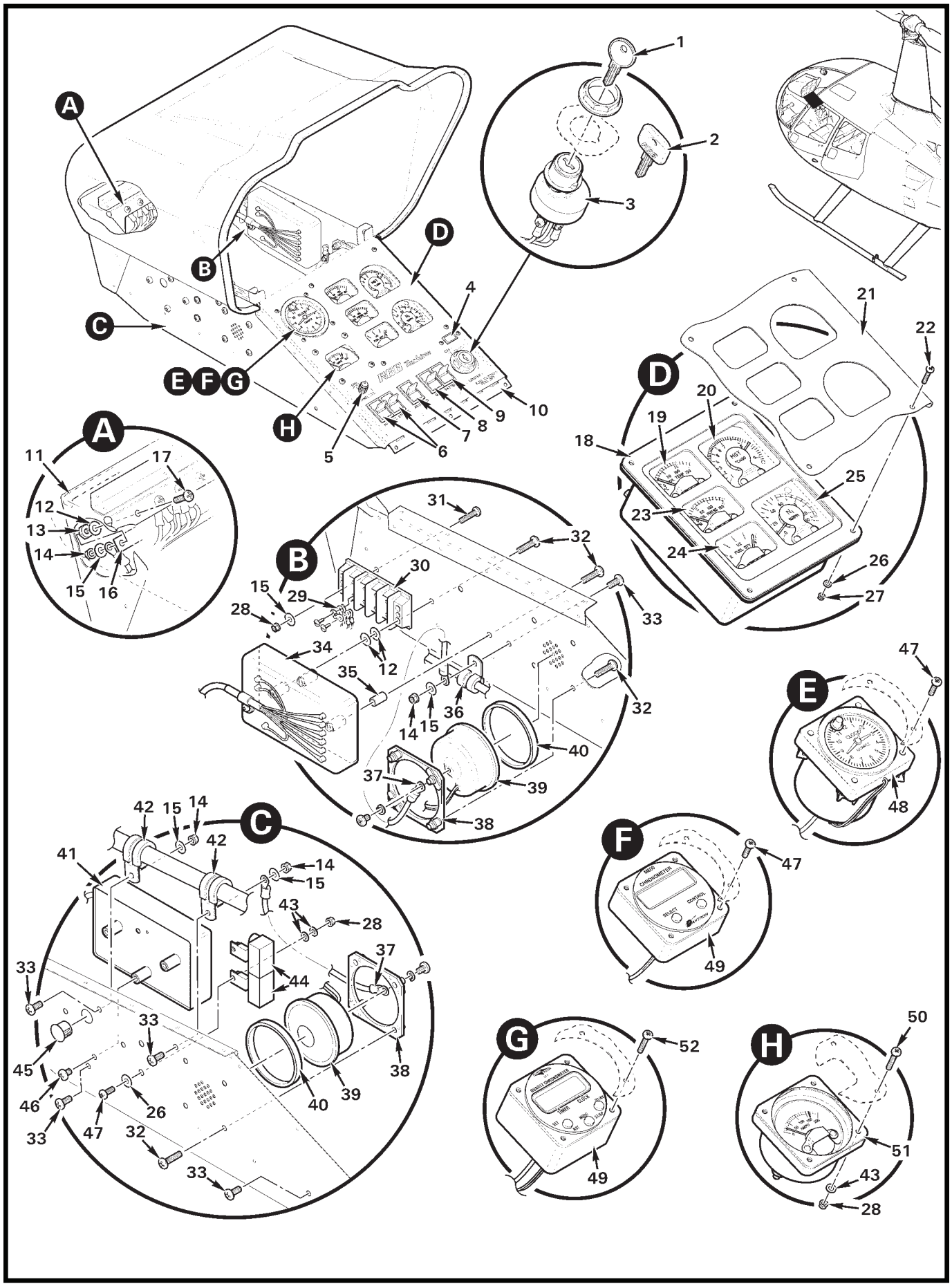
A
B
C
D
E
F
G
H
1
2
3
4
5
6
7
8
9
10
11
12
13
14
15
16
17
18
19
20
21
22
23
24
25
26
27
28
29
30
31
32
33
34
35
36
37
38
39
40
41
42
43
44
45
46
47
48
49
50
51
52

FIGURE AND INDEX NUMBER	PART NUMBER	DESCRIPTION	PARTS AVAIL	QTY PER ASSY
		SEVEN-INSTRUMENT CONSOLE – LOWER PANEL		
95-39-1	R8096	Key – Duplicate (specify ship S/N and "PK" numbers when ordering)	X	1
2	D768-8	Key (blank; black plastic-coated, "R66" logo)	X	1
3	F661-2	Switch	X	1
4	G198-2	Indicator – Rotor Brake	X	1
5	MS91528-0C1B	Knob (dimmer)	X	1
6	B184-1	Switch Assembly	X	2
7	B184-13	Switch Assembly	X	1
8	B184-11	Switch Assembly	X	1
9	B184-2	Switch Assembly	X	1
10	A356-2	Hinge	X	1
11	A226-3	Seal (install using B270-4 or -13 adhesive)	X	A/R
12	NAS1149DN832H	Washer	X	10
13	B301-8	Nut	X	8
14	MS21042L08	Nut	X	11
15	NAS1149FN816P	Washer	X	12
16	A448-14	Bus Bar	X	1
17	B567-43	Screw	X	8
18	G144-6	Instrument Cluster (Incl items 19, 20, and 23 thru 25)	X	1
19	—	Oil Temperature Gage	O	1
20	—	MGT Gage	O	1
21	B051-20	Face – Cluster Panel	X	1
22	MS35206-217	Screw	X	4
23	—	Oil Pressure Gage	O	1
24	—	Fuel Quantity Gage	O	1
25	—	N1 Meter	O	1
26	NAS1149FN616P	Washer	X	5
27	MS21042L04	Nut	X	1
28	MS21042L06	Nut	X	7
29	601985-2	Jumper Tab	X	3
30	601716-4	Terminal Block	X	1
31	MS35206-231	Screw	X	1
32	MS27039C0810	Screw	X	11
33	MS27039C0806	Screw	X	7
34	B395-1	Dimmer Assembly (includes connector)	X	1

NOTES

Continues

FIGURE AND INDEX NUMBER	PART NUMBER	DESCRIPTION	PARTS AVAIL	QTY PER ASSY
		SEVEN-INSTRUMENT CONSOLE – LOWER PANEL (Cont'd)		
95-39-35	A130-34	Spacer	X	2
36	MS21919WDG4	Clamp	X	1
37	B320-79	Wire – Jumper (Ref)	O	2
38	A479-1	Plate	X	2
39	B320-3	Horn (Incl item 37)	X	2
40	A479-2	Ring	X	2
41	A569-11	Low RPM Warning Unit (includes connector)	X	1
42	MS21919WDG8	Clamp	X	2
43	NAS620-6	Washer	X	8
44	D359-1	Regulator – Voltage	X	2
45	2633	Hole Plug	X	2
46	MS35206-241	Screw	X	3
47	MS35206-228	Screw	X	6
48	A072-8	Clock Assembly	X	1
49	A064-4	Chronometer Assembly (Davtron 800)	X	1
		Chronometer Assembly (Astrotech AT420000)	X	1
50	MS35206-232	Screw	X	4
51	G143-1	Ammeter	X	1
52	—	Screw (supplied with item 49 [Astrotech])	X	4

NOTES

Intentionally Blank

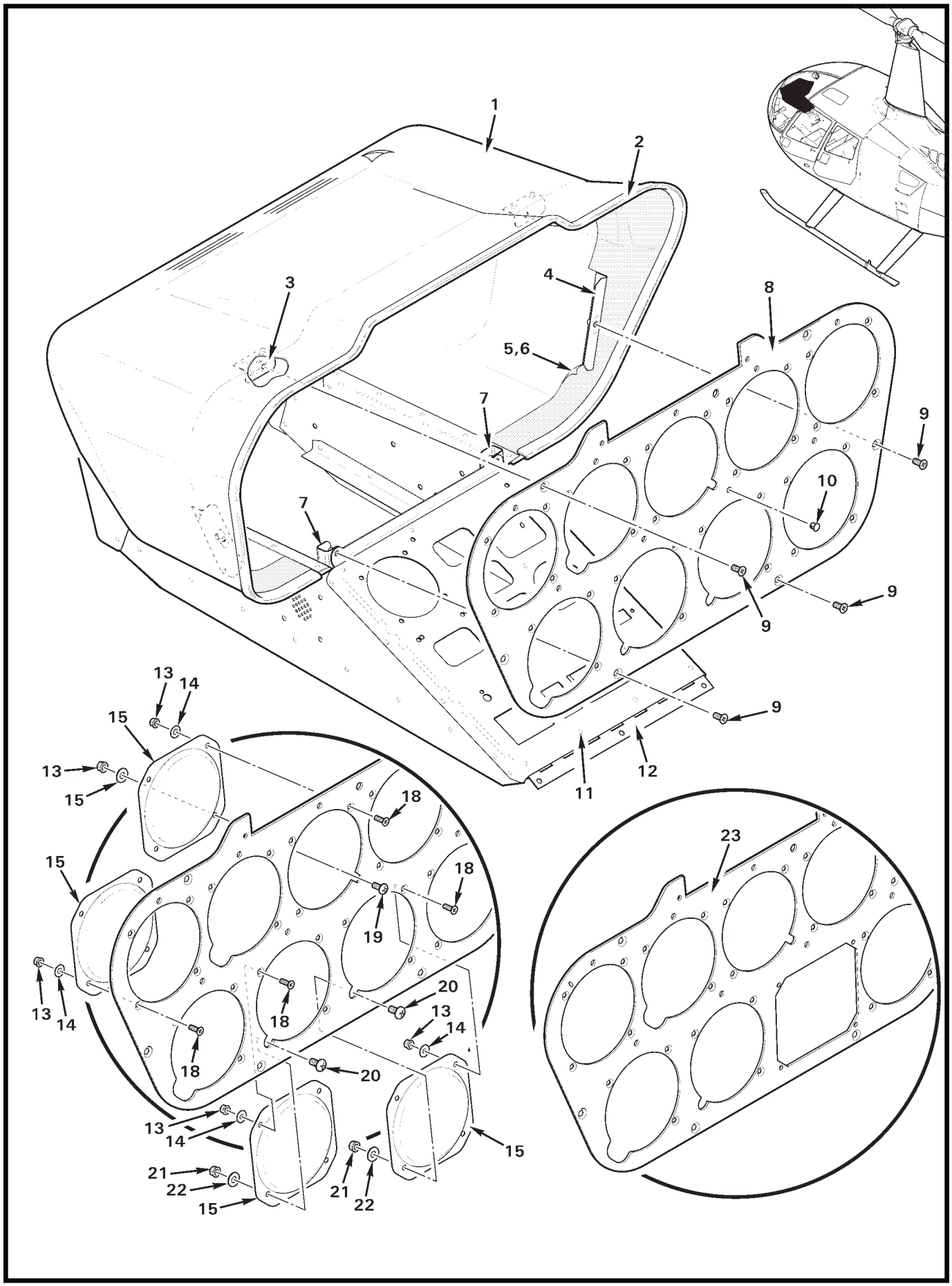

FIGURE 95-43 NINE-INSTRUMENT CONSOLE ASSEMBLY

FIGURE AND INDEX NUMBER	PART NUMBER	DESCRIPTION	PARTS AVAIL	QTY PER ASSY
		NINE-INSTRUMENT CONSOLE ASSEMBLY		
95-43-1	B051-19*	Console Assembly (Incl items 2 thru 7, 12, and lower panels)	X	1
2	A226-11	Trim	X	A/R
3	B181-2	Angle	X	2
4	B181-3	Angle	X	2
5	B051-8	Liner (vinyl; install using item 6)	X	1
6	B270-8qt	Adhesive	X	A/R
7	A365-11	Angle	X	2
8	B206-4	Face	X	1
9	MS24694-S4	Screw	X	6
10	2590	Hole Plug (if no post light installed)	X	A/R
11	MS20426AD3	Rivet	X	4
12	A356-2	Hinge (install using item 11)	X	1
13	MS21042L06	Nut	X	A/R
14	NAS1149FN616P	Washer	X	A/R
15	B190-6	Cover	X	A/R
16	MS21042L08	Nut	X	A/R
17	NAS1149FN816P	Washer	X	A/R
18	MS24693-S27	Screw	X	A/R
19	MS27039C0806	Screw	X	A/R
20	MS27039C1-06	Screw	X	A/R
21	MS21042L3	Nut	X	A/R
22	NAS1149F0332P	Washer	X	A/R
23	B206-5	Face (used when HSI is installed)	X	1

NOTES * For instrument and other component installation, see Figure 95-35 and Figure 95-39.

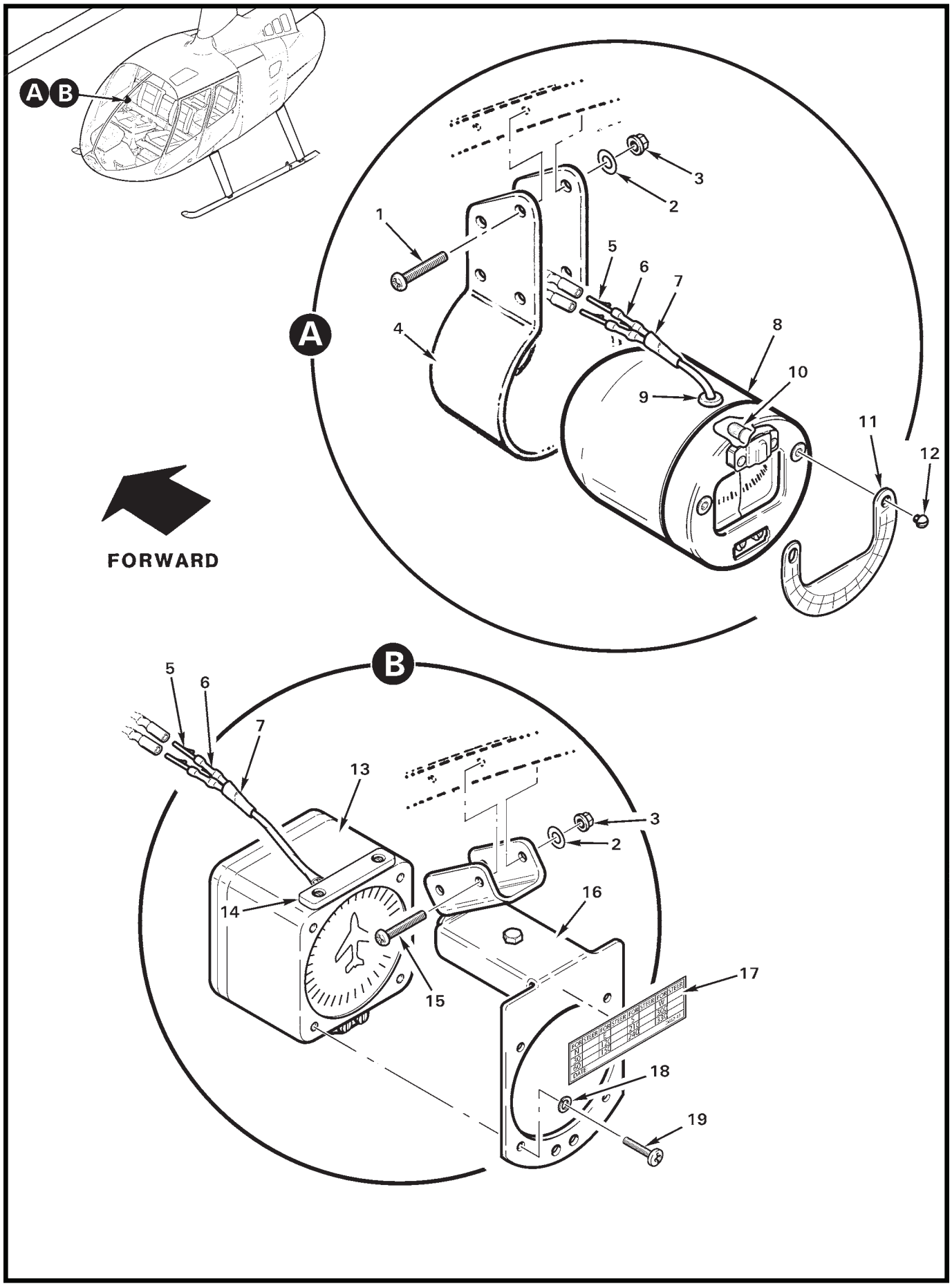
A B
A
1
2
3
4
5
6
7
8
9
10
11
12
FORWARD
B
5
6
7
13
3
2
14
16
15
17
18
19

FIGURE AND INDEX NUMBER	PART NUMBER	DESCRIPTION	PARTS AVAIL	QTY PER ASSY
		COMPASS INSTALLATION		
95-45-1	MS35214-47	Screw	X	4
2	NAS1149DN816J	Washer	X	A/R
3	NAS1291C08M	Nut	X	A/R
4	C685-1	Mount – Compass	X	1
5	B263-1	Pin	X	2
6	B158-2	Heat Shrink (0.125 in. dia, black)	X	A/R
7	B158-3	Heat Shrink (0.187 in. dia, black)	X	A/R
8	A022-4	Compass Assembly (Incl items 5 thru 7, 9, and 10 thru 12)	X	1
9	MS35489-4	Grommet	X	1
10	B196-21	Lamp	X	1
11	—	Deviation Plate (Ref)	O	1
12	—	Screw	O	2
13	B148-5	Compass Assembly – Vertical Card (Incl items 5 thru 7, 14, and 19)	X	1
14	PAI-28V	Light Bar (Ref)		
15	MS35214-47	Screw	X	2
16	B339-2	Mount – Vertical Card Compass	X	1
17	D682-43	Deviation Placard – Vertical Card Compass	X	1
18	MS35338-136B	Lockwasher	X	4
19	—	Screw	O	4

NOTES

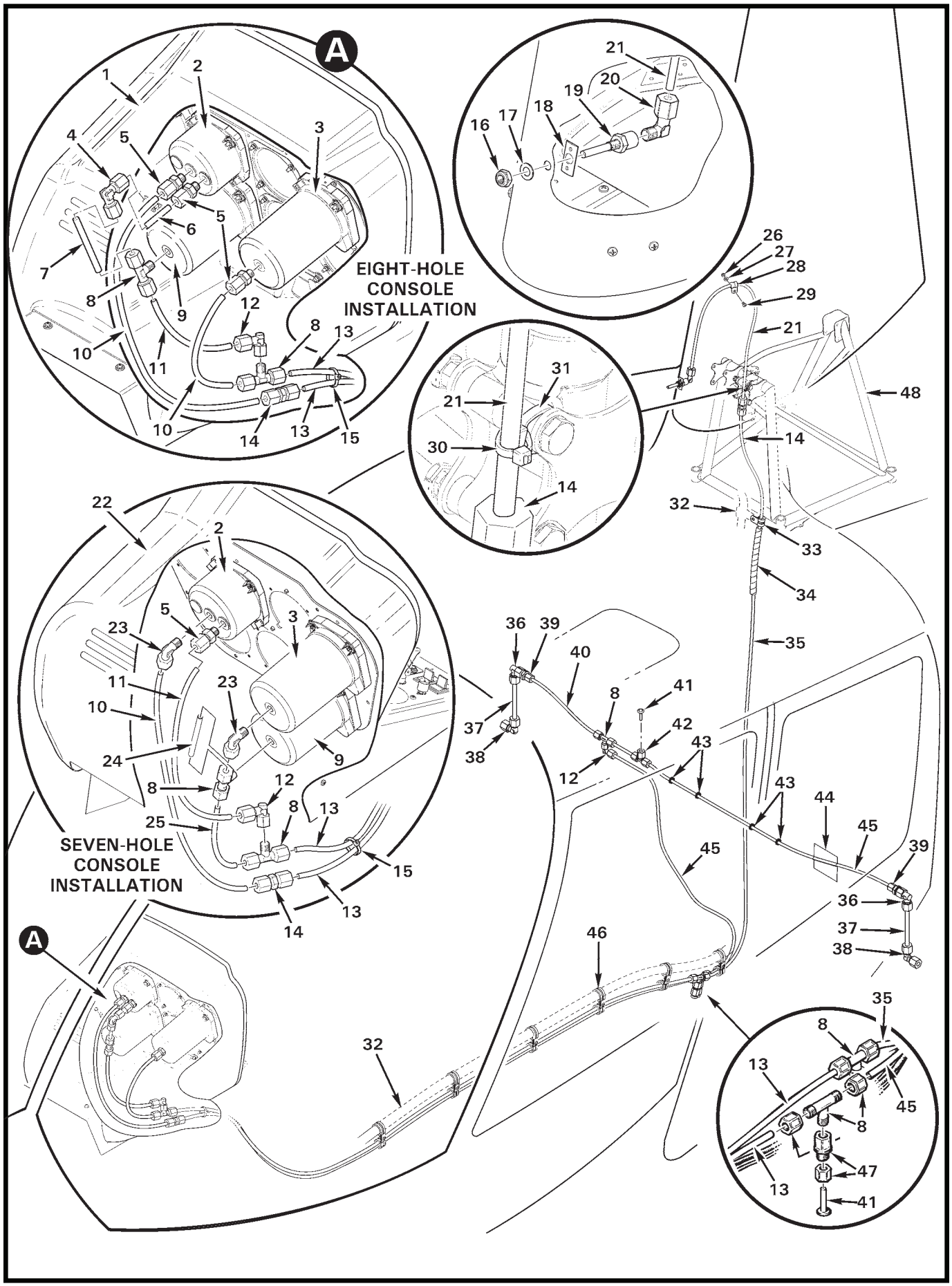

FIGURE 95-47 PITOT/STATIC TUBES INSTALLATION

FIGURE AND INDEX NUMBER	PART NUMBER	DESCRIPTION	PARTS AVAIL	QTY PER ASSY
		PITOT/STATIC TUBES INSTALLATION		
95-47-1	G050	Console Assembly (eight-instrument, Ref)		
2	C599	Airspeed Indicator (Ref, see Figure 95-27 or 95-35)		
3	A602-1	Rate-of-Climb Indicator (Ref)		
4	50-4-N-0	Elbow	X	1
5	10-4-2-N-0	Connector	X	1
6	A729-69	Tube	X	1
7	A729-70	Tube	X	1
8	60-4-2-N-0	Tee	X	5
9	A613	Altimeter (Ref)		
10	A729-23	Tube	X	1
11	A729-21	Tube	X	1
12	45-4-2-N-0	Elbow	X	1
13	A729-28	Tube	X	2
14	15-4-N-0	Union	X	1
15	MS3367-5-9	Ty-Rap	X	A/R
16	MS21083-N5	Nut	X	1
17	NAS1149D0516J	Washer	X	1
18	A246-3	Spacer	X	1
19	A262-1	Pitot Tube	X	1
20	A596-1	Elbow	X	1
21	A729-54	Tube	X	1
22	B050	Console Assembly (seven-instrument, Ref)		
23	40-4-2-N-0	Elbow	X	1
24	A729-26	Tube	X	1
25	A729-25	Tube	X	1
26	MS21042L08	Nut	X	1
27	NAS1149FN816P	Washer	X	1
28	MS21919WDG4	Clamp	X	1
29	MS27039C0806	Screw	X	1
30	MS3367-4-9	Ty-Rap (secures item 21 to item 31)	X	1
31	MS3367-5-9	Ty-Rap (secures item 30 to item 48)	X	1
32	F059	Main Electrical Harness Assembly (Ref)		
33	MS21919WDG4	Clamp (installed with item 32)	X	1
34	B161-8	Spirap	X	A/R
35	A729-6	Tube	X	1

NOTES

Continues

FIGURE AND INDEX NUMBER	PART NUMBER	DESCRIPTION	PARTS AVAIL	QTY PER ASSY
		PITOT/STATIC TUBES INSTALLATION (Cont'd)		
95-47-36	45-6-6-N-0	Elbow	X	2
37	A729-32	Tube	X	2
38	50-6-N-0	Elbow	X	2
39	10-4-6-N-0	Fitting	X	2
40	A729-52	Tube	X	1
41	PI0808S	Plug	X	3
42	70-4-N-0	Tee	X	1
43	MS35489-6	Grommet	X	4
44	A701-2	Tape (6 inch wide, aluminum foil)	X	A/R
45	A729-24	Tube	X	1
46	MS21919WDG	Clamps (Ref; secures item 13 to item 32)		
47	25-4-2-N-0	Connector	X	1
48	G201-1	Frame (Ref)		

NOTES

Intentionally Blank

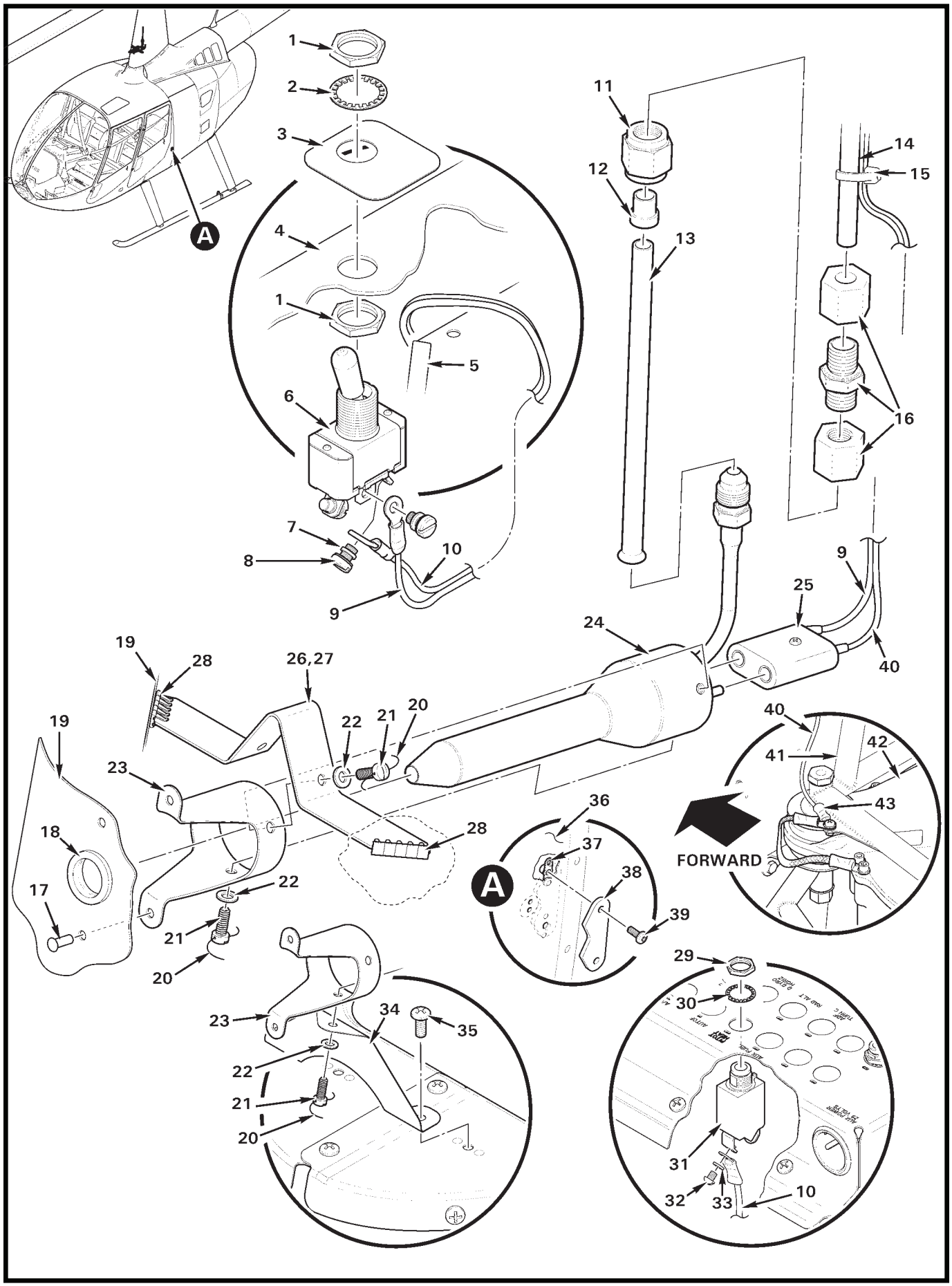

FIGURE 95-51 HEATED PITOT INSTALLATION

FIGURE AND INDEX NUMBER	PART NUMBER	DESCRIPTION	PARTS AVAIL	QTY PER ASSY
		HEATED PITOT INSTALLATION		
95-51-1	—	Nut	O	2
2	—	Lockwasher	O	1
3	D339-3	Name plate	X	1
4	F444-1	Cover – Cyclic Box (Ref)		
5	A226-11	Trim	X	A/R
6	B300-4	Switch (Incl items 1, 2, 7, and 8)	X	1
7	—	Washer	O	2
8	—	Screw	O	2
9	-709	Wire (Ref)		
10	-710	Wire (Ref)		
11	AN818-4D	Nut	X	1
12	MS20819-4D	Sleeve	X	1
13	D339-4	Tube	X	1
14	A729-54	Tube (Ref; see also Figure 95-47)		
15	MS3367-4-9	Ty-Rap (or MS3367-6-0)	X	A/R
16	15-4-N-0	Union	X	1
17	MS20470AD4	Rivet	X	2
18	MS35489-17X	Grommet	X	1
19	F261-1	Mast Fairing (Ref)		
20	MS20995C20	0.020 in. dia Safety Wire	X	A/R
21	AN502-6-6	Screw	X	3
22	NAS620-6	Washer	X	3
23	D339-1	Mount	X	1
24	D340-2	Pitot Tube Assembly (Incl item 25)	X	1
25	—	Connector (with sockets)	O	1
26	D339-6	Bumper Assembly (incl items 27 and 28)	X	1
27	D339-7	Bumper	X	1
28	A225-1	Grommet	X	2
29	—	Nut	O	1
30	—	Lockwasher	O	1
31	B297-10	Circuit Breaker (10-amp; includes items 29,30, 32 and 33)	X	1
32	—	Screw	O	1
33	—	Washer	O	1
34	D339-2	Brace	X	1
35	MS27039C0806	Screw	X	2

NOTES

Continues

FIGURE AND INDEX NUMBER	PART NUMBER	DESCRIPTION	PARTS AVAIL	QTY PER ASSY
		HEATED PITOT INSTALLATION (Cont'd)		
95-51-36	F015-3	Skin (Ref)		
37	MS21069L04	Nutplate	X	2
38	D372-4	Dam – Static Port (LH shown, RH opposite)	X	2
39	MS35206-214	Screw	X	4
40	D340-708	Wire (ground; see MM for schematic)	X	1
41	G201-1	Frame (Ref)		
42	F006	MRGB (Ref)		
43	B260-4	Terminal	X	1

NOTES

CHAPTER 96

ELECTRICAL SYSTEM

Figure	*Title*	*Page*
96-1	B237-7 (Standard) Battery Installation	96.0
96-3	B237-8 (Large) Battery Installation	96.2
96-5	Battery Relay Installation	96.4
96-9	Lithium-Ion Battery Installation	96.8
96-11	Lithium-Ion Battery Circuit Back-up Batteries	96.10
96-13	External Power Plug Installation	96.12
96-17	Starter-Generator and External Power Relay Installation	96.16
96-21	Circuit Breaker Panel	96.20
96-23	Hourmeter and Collective-Activated Switches Installation	96.22
96-27	Accessory Bars Installation	96.26
96-31	Starter Generator Relay and Battery Minder Installation	96.30
96-35	Lithium-Ion Battery Indicator Lights	96.34
96-37	Anti-Ice Switch Installation	96.36
96-39	G198-1 Annunciator and Related Sensors	96.38
96-41	Engine Fire, Cowl Door, and Low Voltage Sensors	96.40
96-43	Electrical Relay Installation	96.42
96-45	Cockpit Camera Installation With Air Conditioning	96.44
96-49	Cockpit Camera Installation Without Air Conditioning	96.48

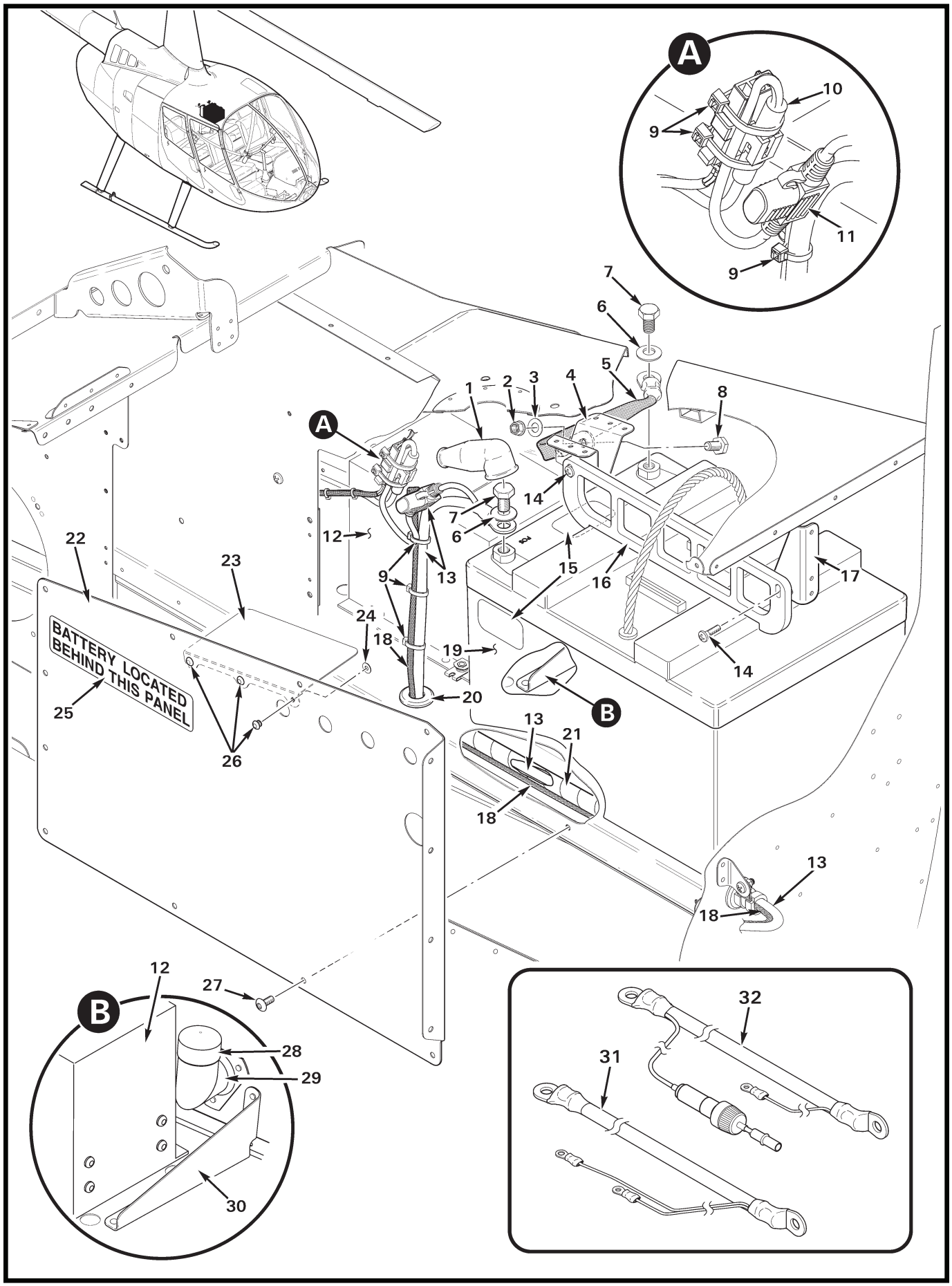
A
10
9
11
9
7
6
5
1
2
3
4
8
A
14
7
6
12
22
23
9
13
15
16
17
24
18
19
14
BATTERY LOCATED
BEHIND THIS PANEL
25
20
B
13
21
26
18
13
18
12
27
B
28
29
30
32
31

FIGURE AND INDEX NUMBER	PART NUMBER	DESCRIPTION	PARTS AVAIL	QTY PER ASSY
		B237-7 (STANDARD) BATTERY INSTALLATION		
96-1-1	MS25171-2S	Nipple	X	1
2	D210-4	Nut	X	1
3	NAS1149F0432P	Washer	X	1
4	G130-5	Channel (Ref)		
5	A780-2	Cable Assembly (negative)	X	1
6	—	Washer (conical)	O	2
7	—	Bolt (hex head, M8)	O	2
8	AN4-3A	Bolt	X	1
9	MS3367-5-9	Ty-Rap	X	A/R
10	B263-61	Plug	X	1
	B263-56	Socket (not shown)	X	1
11	D262-12	Fuse Holder	X	1
	D275-230	Fuse (not shown)	X	1
12	RR30000466	Generator Control Unit (Ref)		
13	A780-76*	Cable Assembly (Positive; ship S/N 0860 and subsequent. Includes items 10 and 11.)	X	1
14	MS27039C0809	Screw	X	2
15	9589**	Decal – "DO NOT OVER TORQUE..."	X	1
16	G131-4	Plate	X	1
17	G130-4	Angle (Ref)		
18	F859-2819/-2882	Wires (Ref)		
19	B237-7	Battery (RG24-20**; includes items 6, 7, and 15)	X	1
20	MS35489-13	Grommet	X	1
21	B161-8	Spirap	X	A/R
22	G248-8	Cover Assembly (Incl items 23 thru 26)	X	1
23	G248-7	Guard	X	1
24	NAS1149FN416P	Washer	X	3
25	F654-24	Decal	X	1
26	SR-3035B	Rivet	X	3
27	B526-6	Screw	X	14
28	A959-12	Cap (black vinyl)	X	1
29	A372-11	Weldment (Ref)		
30	G130-6	Angle (Ref)		
31	A780-78	Cable Assembly (positive; ship S/N 0003 thru 0519)	X	1
32	A780-74	Cable Assembly (positive; ship S/N 0520 thru 0859)	X	1

NOTES
* For ship S/N 0859 and prior, refer to KI-262 R66 Lead-Acid Battery Installation Upgrade Kit Intructions. See www.robinsonheli.com for kit contents and instructions.

** Concorde part number.

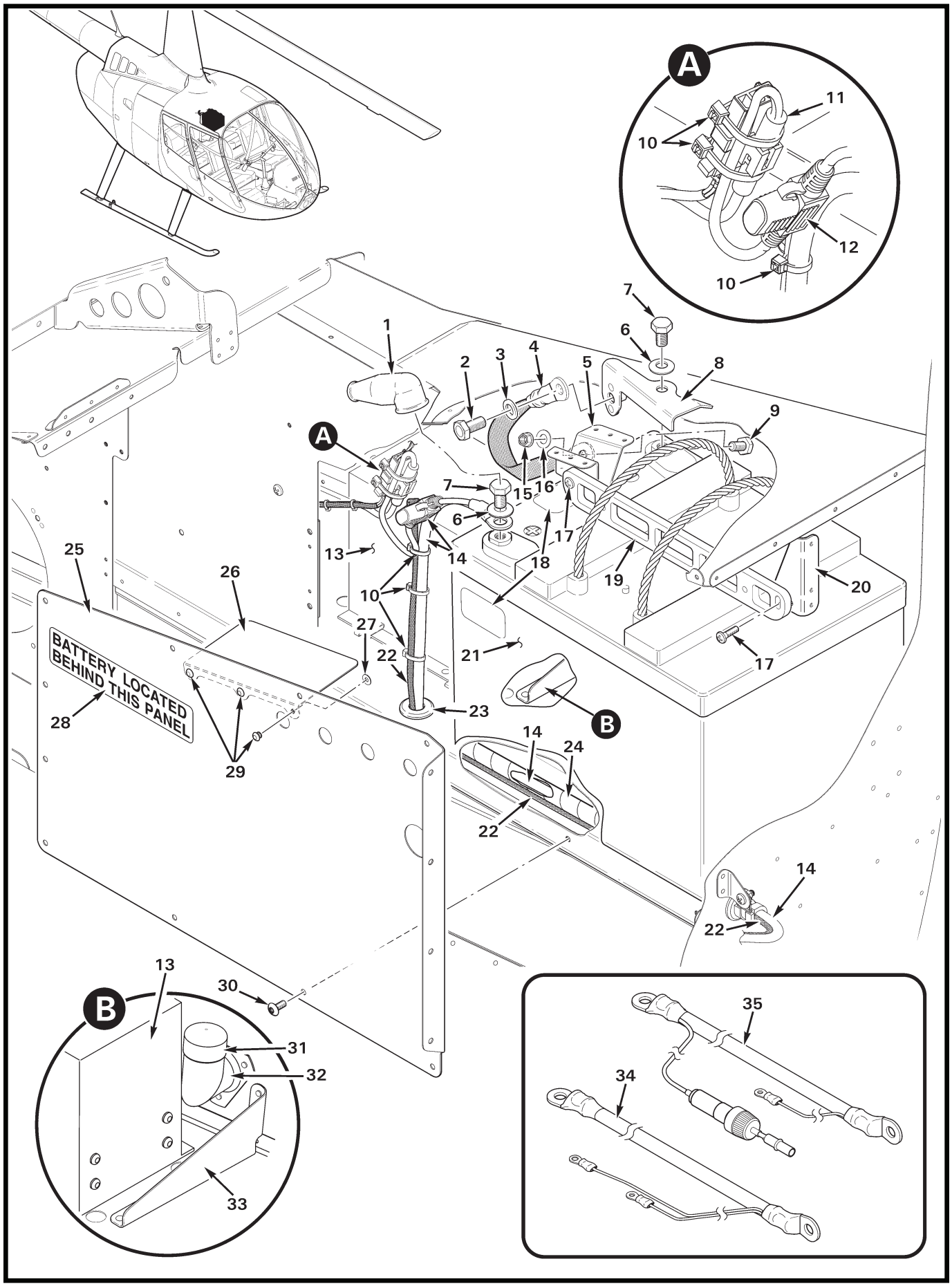
A
11
10
12
10
7
6
8
1
2
3
4
5
9
A
7
15
16
6
17
13
14
18
19
20
25
26
10
27
22
21
17
BATTERY LOCATED
BEHIND THIS PANEL
28
23
B
14
24
29
22
14
22
13
30
B
31
32
33
35
34

FIGURE AND INDEX NUMBER	PART NUMBER	DESCRIPTION	PARTS AVAIL	QTY PER ASSY
		B237-8 (LARGE) BATTERY INSTALLATION		
96-3-1	MS25171-2S	Nipple	X	1
2	NAS6605-3	Bolt	X	1
3	NAS1149F0563P	Washer	X	1
4	A780-2	Cable Assembly (negative)	X	1
5	G130-5	Channel (Ref)		
6	—	Washer (conical)	O	2
7	—	Bolt (hex head, M8)	O	2
8	G131-5	Terminal Assembly	X	1
9	AN4-3A	Bolt	X	1
10	MS3367-5-9	Ty-Rap	X	A/R
11	B263-61	Plug	X	1
	B263-56	Socket (not shown)	X	1
12	D262-12	Fuse Holder	X	1
	D275-230	Fuse (not shown)	X	1
13	RR30000466	Generator Control Unit (Ref)		
14	A780-76*	Cable Assembly (Positive, ship S/N 0860 and subsequent. Includes items 11 and 12.)	X	1
15	D210-4	Nut	X	1
16	NAS1149F0432P	Washer	X	1
17	MS27039C0809	Screw	X	2
18	9589**	Decal – "DO NOT OVER TORQUE..."	X	1
19	G131-2	Plate	X	1
20	G130-4	Angle (Ref)		
21	B237-8	Battery (RG-325**, includes items 6, 7, and 18)	X	1
22	F859-2819/-2882	Wires (Ref, provision for lithium-ion battery installation)		
23	MS35489-13	Grommet	X	1
24	B161-8	Spirap	X	A/R
25	G248-8	Cover Assembly (Incl items 26 thru 29)	X	1
26	G248-7	Guard	X	1
27	NAS1149FN416P	Washer	X	3
28	F654-24	Decal	X	1
29	SR-3035B	Rivet	X	3
30	B526-6	Screw	X	14
31	A959-12	Cap (black vinyl)	X	1
32	A372-11	Weldment (Ref)		

NOTES * For ship S/N 0859 and prior, refer to KI-262 R66 Lead-Acid Battery Installation Upgrade Kit Intructions. See www.robinsonheli.com for kit contents and instructions.

** Concorde part number.

FIGURE AND INDEX NUMBER	PART NUMBER	DESCRIPTION	PARTS AVAIL	QTY PER ASSY
		B237-8 (LARGE) BATTERY INSTALLATION (Cont'd)		
96-3-33	G130-6	Angle (Ref)		
34	A780-78	Cable Assembly (positive, ship S/N 0003 thru 0519)	X	1
35	A780-74	Cable Assembly (positive, ship S/N 0520 thru 0859)	X	1

NOTES

Intentionally Blank

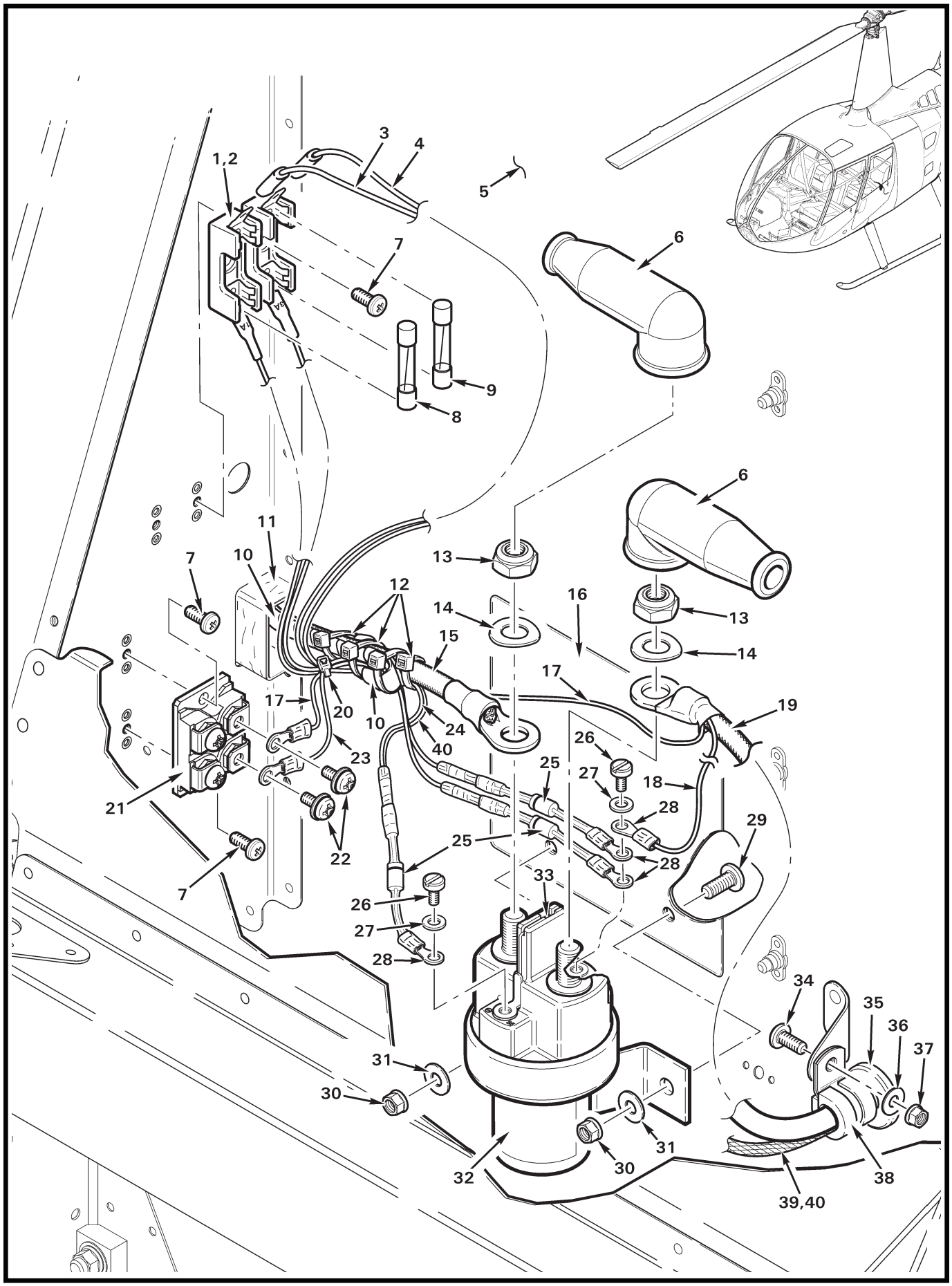
1,2
3
4
5
6
7
8
9
10
11
12
13
14
15
16
17
18
19
20
21
22
23
24
25
26
27
28
29
30
31
32
33
34
35
36
37
38
39,40
40

FIGURE AND INDEX NUMBER	PART NUMBER	DESCRIPTION	PARTS AVAIL	QTY PER ASSY
		BATTERY RELAY INSTALLATION		
96-5-1	B304-12	Diode Assembly (Includes items 2, 8, 9, 25 [2], 28, wires, splices, and heat shrink as an assembly.)	X	1
2	D262-2	Fuse Block	X	1
3	F859-2291	Wire (Ref)		
	F059-2322	Wire (Ref; earlier ships with aft power receptacle)		
4	F859-66	Wire (Ref)		
	F059-66	Wire (Ref; earlier ships with aft power receptacle)		
5	G259	Bulkhead – Lower (Ref)		
6	MS25171-2S	Nipple	X	2
7	MS35206-228	Screw	X	A/R
8	D275-201	Fuse (1 amp)	X	1
9	D275-203	Fuse (3 amp)	X	1
10	B161-8	Spirap	X	A/R
11	A701-1	Tape (foil)	X	A/R
12	MS3367-5-9	Ty-Rap (large)	X	A/R
13	MS21044B5	Nut	O	2
14	01000424	Washer	X	2
15	A780-58	Cable Assembly	X	1
16	C452-5	Guard (clear plastic)	X	1
17	A780-2242	Wire (Ref; earlier ships with aft power receptacle)		
18	A780-64	Wire (Ref)		
19	A780-76	Cable Assembly (Ref, includes items 18 and terminals, assembled)	X	1
20	MS3367-3-9	Ty-Rap (small)	X	A/R
21	STPS80H100TV	Rectifier (Incl item 22; earlier ships with aft power receptacle)	X	1
22	—	Screw	O	4
23	F059-2324	Wire (Ref; earlier ships with aft power receptacle)		
24	F859-65	Wire (Ref)		
	F059-65	Wire (Ref; earlier ships with aft power receptacle)		
25	D275-102	Diode	X	3
26	01003621	Screw	X	2
27	01004635	Washer	X	2
28	B260-2	Terminal	X	2
29	MS27039C1-07	Screw	X	2
30	D210-3	Nut	X	2

NOTES

Continues

FIGURE AND INDEX NUMBER	PART NUMBER	DESCRIPTION	PARTS AVAIL	QTY PER ASSY
		BATTERY RELAY INSTALLATION (Cont'd)		
96-5-31	NAS1149F0332P	Washer	X	2
32	B415-2	Relay (Incl items 13, 14, 26, 27, and 33)	X	1
33	01009214	Suppression Diode Assembly	X	1
34	MS27039C0806	Screw	X	1
35	MS35489-13	Grommet	X	1
36	NAS1149FN816P	Washer	X	1
37	MS21042L08	Nut	X	1
38	MS21919WDG6	Clamp	X	1
39	F859-2819*	Wire (white, Ref)		
	F859-2819*	Wire (blue, Ref)		
40	F859-2882	Wire (Ref)		

NOTES * For use when lithium-ion battery is installed.

Intentionally Blank

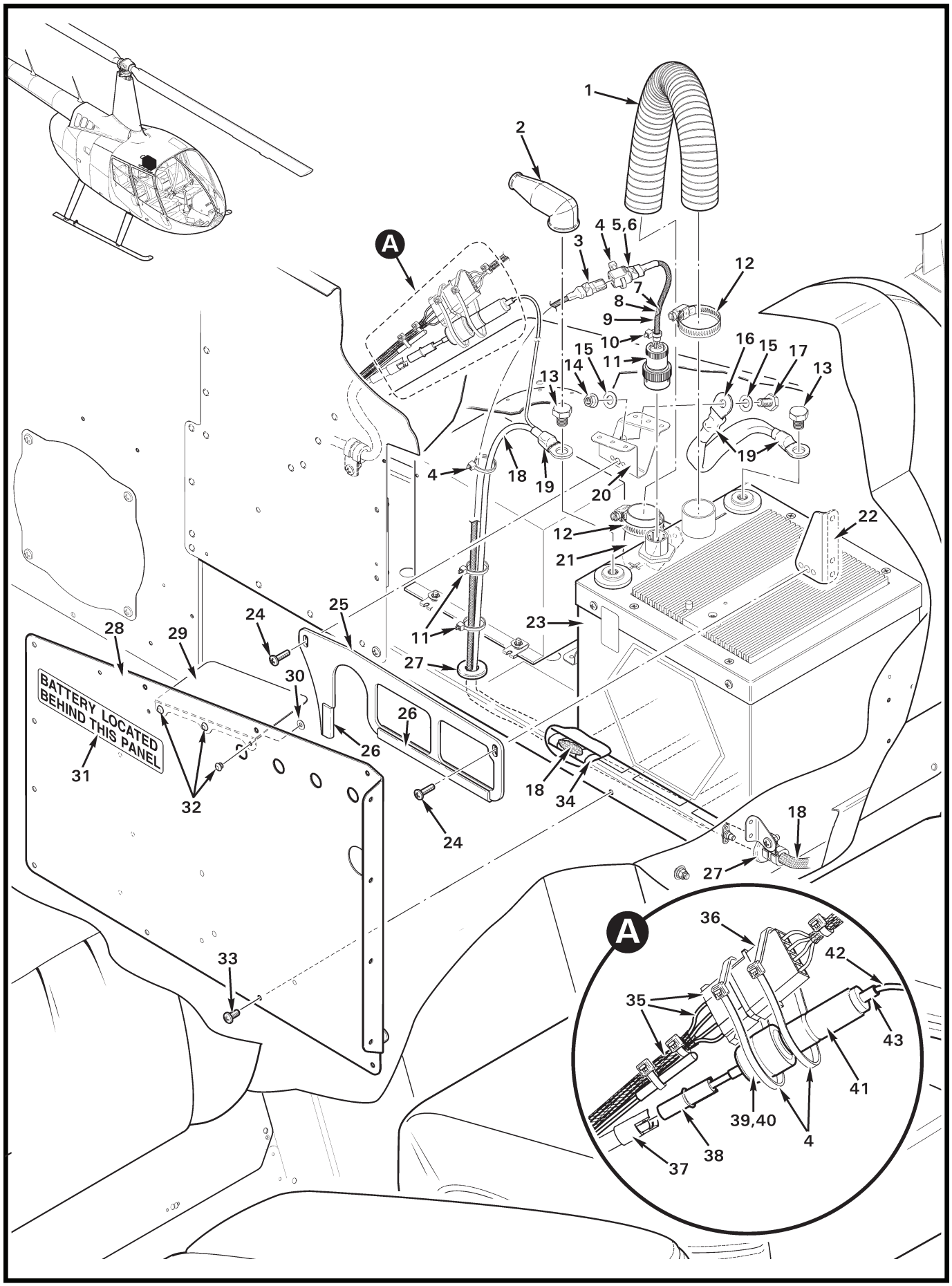
1
2
3
4
5,6
7
8
9
10
11
12
13
14
15
16
17
18
19
20
21
22
23
24
25
26
27
28
29
30
31
32
33
34
35
36
37
38
39,40
41
42
43
A
BATTERY LOCATED BEHIND THIS PANEL

FIGURE AND INDEX NUMBER	PART NUMBER	DESCRIPTION	PARTS AVAIL	QTY PER ASSY
		LITHIUM-ION BATTERY INSTALLATION		
96-9-1	A785-40	Hose	X	1
2	MS25171-2S	Nipple	X	1
3	D262-2	Receptacle (Ref)		
4	MS3367-4-9	Ty-Rap	X	A/R
5	F693-6	Harness Assembly (Incl items 6 thru 11)	X	1
6	D269-1	Plug (includes [3] M39029/58-360 pins)	X	1
7	-2819	Wire (Ref, white)		
8	-2819	Wire (Ref, blue)		
	-2882	Wire (Ref, white)		
9	B266-4	Sleeving	X	A/R
10	MS3367-4-0	Ty-Rap	X	1
11	9018048*	Plug	O	1
12	B277-12	Clamp	X	2
13	—	Bolt (8mm)	O	2
14	D210-4	Nut	X	1
15	NAS1149F0432P	Washer	X	2
16	A780-2	Cable Assembly (Incl item 19)	X	1
17	AN4-3A	Bolt	X	1
18	A780-76	Cable Assembly (Incl items 19 and 38 thru 43)	X	1
19	B158-8	Heat Shrink	X	A/R
20	G130-5	Channel (Ref)		
21	A372-11	Weldment (Ref)		
22	G130-4	Angle (Ref)		
23	D237-2	Battery (24 volt, lithium-ion; includes item 13)	X	1
24	MS27039C0806	Screw	X	2
25	G131-9	Plate	X	1
26	A226-11	Trim	X	A/R
27	MS35489-13	Grommet	X	2
28	G248-8	Cover Assembly (Incl items 29 thru 32)	X	1
29	G248-7	Guard	X	1
30	NAS1149FN416P	Washer	X	3
31	F654-24	Decal	X	1
32	SR-3055B	Rivet	X	3
33	B526-6	Screw	X	14
34	B161-8	Spirap	X	A/R

NOTES * Mid Continent part no.

Continues

FIGURE AND INDEX NUMBER	PART NUMBER	DESCRIPTION	PARTS AVAIL	QTY PER ASSY
		LITHIUM-ION BATTERY INSTALLATION (Cont'd)		
96-9-35	F049-016	Harness Assembly (Ref, includes item 37)		
	F049-010	Harness Assembly (earlier ships)		
36	B263-16	Housing (Ref, low fuel switch)		
37	B263-10	Housing (Ref)		
38	B263-11	Housing	X	1
	B236-4	Socket	X	1
39	D262-10	Fuse Holder	X	1
40	AGC-15-R	Fuse	X	1
41	B158-408	Heat Shrink (labeled "CH GR" and "15 AMP")	X	A/R
42	-2324	Wire (Ref)		
43	B158-3	Heat Shrink	X	A/R

NOTES

Intentionally Blank

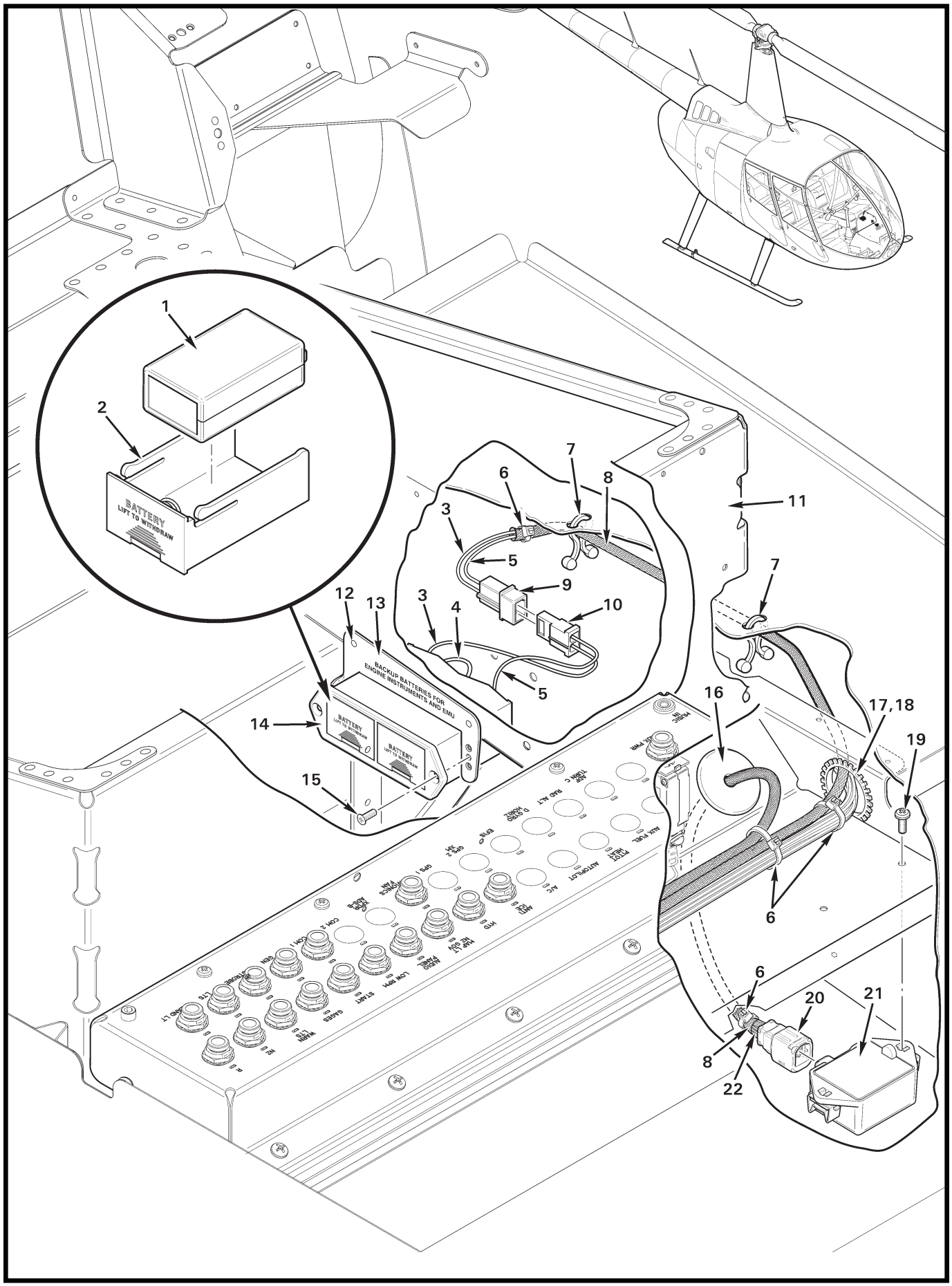
1
2
BATTERY
LIFT TO WITHDRAW
3
4
5
6
7
8
9
10
11
12
13
BACKUP BATTERIES FOR
ENGINE INSTRUMENTS AND EIMU
14
15
16
17,18
19
20
21
22

FIGURE AND INDEX NUMBER	PART NUMBER	DESCRIPTION	PARTS AVAIL	QTY PER ASSY
		LITHIUM-ION BATTERY CIRCUIT BACK-UP BATTERIES		
96-11-1	—	Battery* (9-volt, alkaline)	O	2
2	—	Tray (9-volt battery)	O	2
3	-2830	Wire (ref)		
4	—	Wire (ref; jumper)		
5	-2831	Wire (ref)		
6	MS3367-4-9	Ty-Rap	X	A/R
7	TL-350	Tie	X	2
8	B266-4	Sleeving	X	A/R
9	B263-32	Housing	X	1
	B263-1	Pin	X	2
10	B263-33	Housing	X	1
	B263-2	Pin	X	2
11	F297-1	Support Assembly – Seat (ref, LH)		
12	MS20470AD4	Rivet	X	3
13	G468-1	Mount Assembly	X	1
14	F693-5	Case Assembly – Battery (incl items 1 thru 5, and 10)	X	1
15	MS24693-S4	Screw	X	2
16	MS35489-8	Grommet	X	1
17	MS21266-1N	Grommet (install using item 18; or A225-2 without adhesive)	X	A/R
18	B270-8qt	Adhesive	X	A/R
19	MS35206-228	Screw	X	2
20	D269-11	Plug	X	1
21	F693-1	Module Assembly (senses need for, and switches to backup battery)	X	1
22	F859-111	Wire (ref)		
	F859-129	Wire (ref)		
	F859-2001	Wire (ref)		
	-2828	Wire (ref)		
	-2829	Wire (ref)		
	-2830	Wire (ref)		
	-2832	Wire (ref)		
	-2833	Wire (ref)		
	-2834	Wire (ref)		

NOTES * Sourced locally, any manufacturer, conforming to ANSI/NEDA – 1604A, IEC – 6LR61, or IEC – 6LP3146.

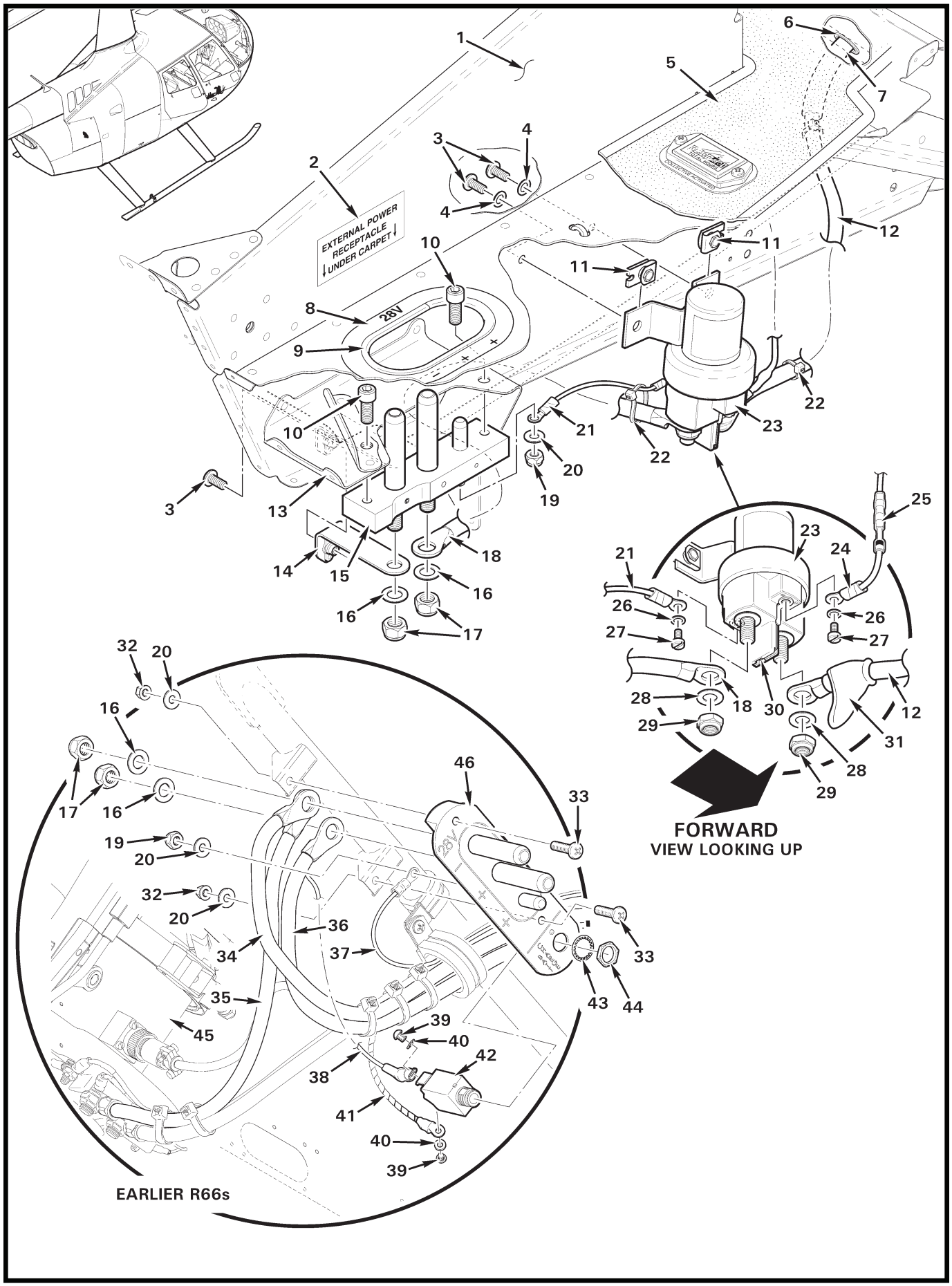
EXTERNAL POWER RECEPTACLE UNDER CARPET
28V
FORWARD
VIEW LOOKING UP
EARLIER R66s

FIGURE AND INDEX NUMBER	PART NUMBER	DESCRIPTION	PARTS AVAIL	QTY PER ASSY
		EXTERNAL POWER PLUG INSTALLATION		
96-13-1	F290-1	Seat Support Assembly – RH FWD (Ref)		
2	G682-2	Decal	X	1
3	MS27039C1-06	Screw	X	3
4	NAS1149F0316P	Washer	X	2
5	F469-24	Carpet Assembly (Ref, see figure 25-15)		
6	NAS557-10A	Grommet	X	1
7	B158-8	Heat Shrink	X	A/R
8	G682-1	Decal	X	1
9	A226-15	Trim	X	A/R
10	NAS1352-4-10	Screw	X	2
11	B162-4	Clipnut	X	2
12	A780-70	Cable Assembly	X	1
13	G599-1	Support – Plug Assembly (Ref)		
14	A448-20	Bus Bar	X	1
15	G597-6	Receptacle Assembly – External Power (Incl items 16, 17, 19, and 20)	X	1
16	NAS1149F0532P	Washer	X	2
17	MS21044N5	Nut	X	2
18	A780-69	Cable Assembly	X	1
19	MS21044N3	Nut	X	1
20	NAS1149F0332P	Washer	X	2
21	F049-011	Harness Assembly	X	1
22	MS3367-5-0	Ty-Rap	X	A/R
23	B415-2	Relay Assembly (Incl items 26 thru 30)	X	1
24	F859-1964	Wire (Ref)		
25	B261-2	Splice (Ref)		
26	01004635	Washer	X	2
27	01003621	Screw	X	2
28	01000424	Washer	X	2
29	MS21044B5	Nut	X	2
30	01009214	Suppression Diode Assembly	X	1
31	MS25171-2S	Nipple	X	1
32	MS21042L3	Nut	X	2
33	MS27039C1-14	Screw	X	2
34	A780-53	Cable Assembly (wire no. 1991, Ref)		

NOTES

Continues

FIGURE AND INDEX NUMBER	PART NUMBER	DESCRIPTION	PARTS AVAIL	QTY PER ASSY
		EXTERNAL POWER PLUG INSTALLATION (Cont'd)		
96-13-35	A780-51	Cable Assembly (wire no. 1969, Ref)		
36	A780-52	Cable Assembly (Ref; wire -1970, includes item 12)		
37	—	Wire Assembly (Ref; wire -2055)		
38	—	Wire (Ref; wire -2232)		
39	—	Screw	O	2
40	—	Lockwasher	O	2
41	—	Wire (Ref; wire -2232, to rectifier)		
42	B297-10	Circuit Breaker (10 amp, includes items 39, 40, 43 and 44) . . .	X	1
43	—	Washer	O	1
44	—	Nut	O	1
45	—	Starter/Generator (Ref)		
46	G597-1 *	Plug Assembly – External Power (Incl items 16, 17, 19, and 20)	O	1

NOTES * Earlier R66s.

Intentionally Blank

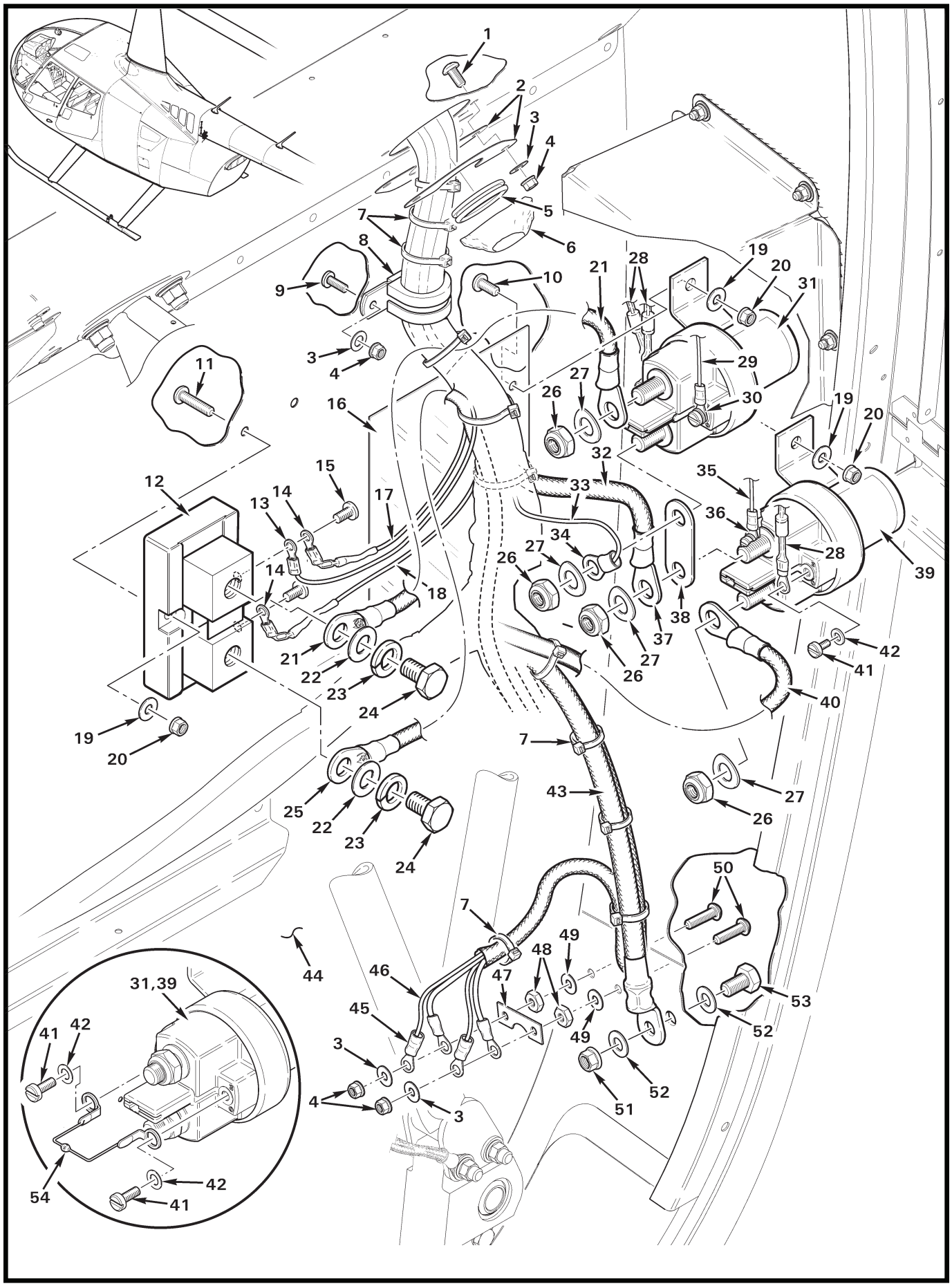

FIGURE 96-17 STARTER-GENERATOR AND EXTERNAL POWER RELAY INSTALLATION

FIGURE AND INDEX NUMBER	PART NUMBER	DESCRIPTION	PARTS AVAIL	QTY PER ASSY
		STARTER-GENERATOR AND EXTERNAL POWER RELAY INSTALLATION		
96-17-1	MS27039C0805	Screw	X	2
2	A453-7	Plate	X	2
3	NAS1149FN816P	Washer	X	5
4	MS21042L08	Nut	X	5
5	NAS557-14A	Grommet	X	1
6	B270-5	Sealant	X	A/R
7	MS3367-4-9	Ty-Rap	X	A/R
8	MS21919WCH__	Clamp (select clamp size as required to prevent slack around harness)	X	1
9	MS27039C0806	Screw	X	1
10	MS27039C1-07	Screw	X	2
11	MS27039C1-10	Screw	X	3
12	MLB-300-50	Shunt (Incl items 15, 23, and 24)	X	1
13	B260-3	Terminal (wire no. 1981)	X	1
14	B260-3	Terminal	X	2
	B261-2	Splice	X	2
	473003	Fuse	X	2
	B158-103	Heat Shrink	X	A/R
15	—	Screw	O	2
16	C452-4	Guard	X	1
17	F059-2313	Wire (Ref)		
18	F059-2312	Wire (Ref)		
19	NAS620-10L	Washer	X	5
20	MS21042L3	Nut	X	5
21	A780-56	Cable Assembly	X	1
22	NAS1149F0663P	Washer	X	2
23	—	Washer (split)	O	2
24	—	Bolt	O	2
25	A780-50	Cable Assembly (wire no. 1982)	X	1
26	MS21044B5	Nut	O	2
27	01000424	Washer	X	2
28	B260-2	Terminal	X	3
	B261-2	Splice	X	3
	D275-102	Diode	X	3
	B158-103	Heat Shrink	X	A/R

NOTES

Continues

FIGURE AND INDEX NUMBER	PART NUMBER	DESCRIPTION	PARTS AVAIL	QTY PER ASSY
		STARTER-GENERATOR AND EXTERNAL POWER RELAY INSTALLATION (Cont'd)		
96-17-29	F059-1976	Wire (ground; Ref)		
30	B260-2	Terminal	X	3
31	B415-2	Relay – Starter/Generator (Incl items 26, 27, 41, 42, and 54)	X	1
32	F059-1386	Wire (Ref)		
33	F049-1979	Wire (Ref; included with F049-03 harness assembly)		
34	B260-6	Terminal	X	2
35	F059-2055	Wire (Ref)		
36	B260-4	Terminal	X	1
37	B260-23	Terminal	X	1
	B158-8	Heat Shrink	X	A/R
38	A448-17	Bus Bar	X	1
39	B415-2	Relay – External Power (Incl items 26, 27, 41, 42, and 54)	X	1
40	A780-52	Cable Assembly (wire no. 1970)	X	1
	B260-20	Terminal	X	2
	B158-408	Heat Shrink	X	A/R
	B260-2	Terminal (not shown; for wire no. 2232)	X	1
41	01003621	Screw	X	2
42	01004635	Washer	X	2
43	A780-53	Cable Assembly (wire no. 1991)	X	1
	B260-20	Terminal	X	1
	B260-22	Terminal (at plug assembly; not shown)	X	1
	B158-408	Heat Shrink	X	A/R
44	F233-1	Firewall – Vertical (Ref)		
45	B260-3	Terminal	X	4
46	F059-1944	Wire (ground, Ref)		
	F059-1976	Wire (ground, Ref)		
	F059-2292	Wire (ground, Ref)		
	F059-2306	Wire (ground, Ref)		
47	A448-3	Bus Bar	X	1
48	B301-8	Nut	X	2
49	NAS1149DN832H	Washer	X	2
50	B567-43	Screw	X	2
51	MS21042L4	Nut	X	1
52	NAS1149F0432P	Washer	X	2
53	AN4-4A	Bolt	X	1

NOTES

Continues

FIGURE AND INDEX NUMBER	PART NUMBER	DESCRIPTION	PARTS AVAIL	QTY PER ASSY
		STARTER-GENERATOR AND EXTERNAL POWER RELAY INSTALLATION (Cont'd)		
96-17-54	01009214	Suppression Diode Assembly	X	1

NOTES

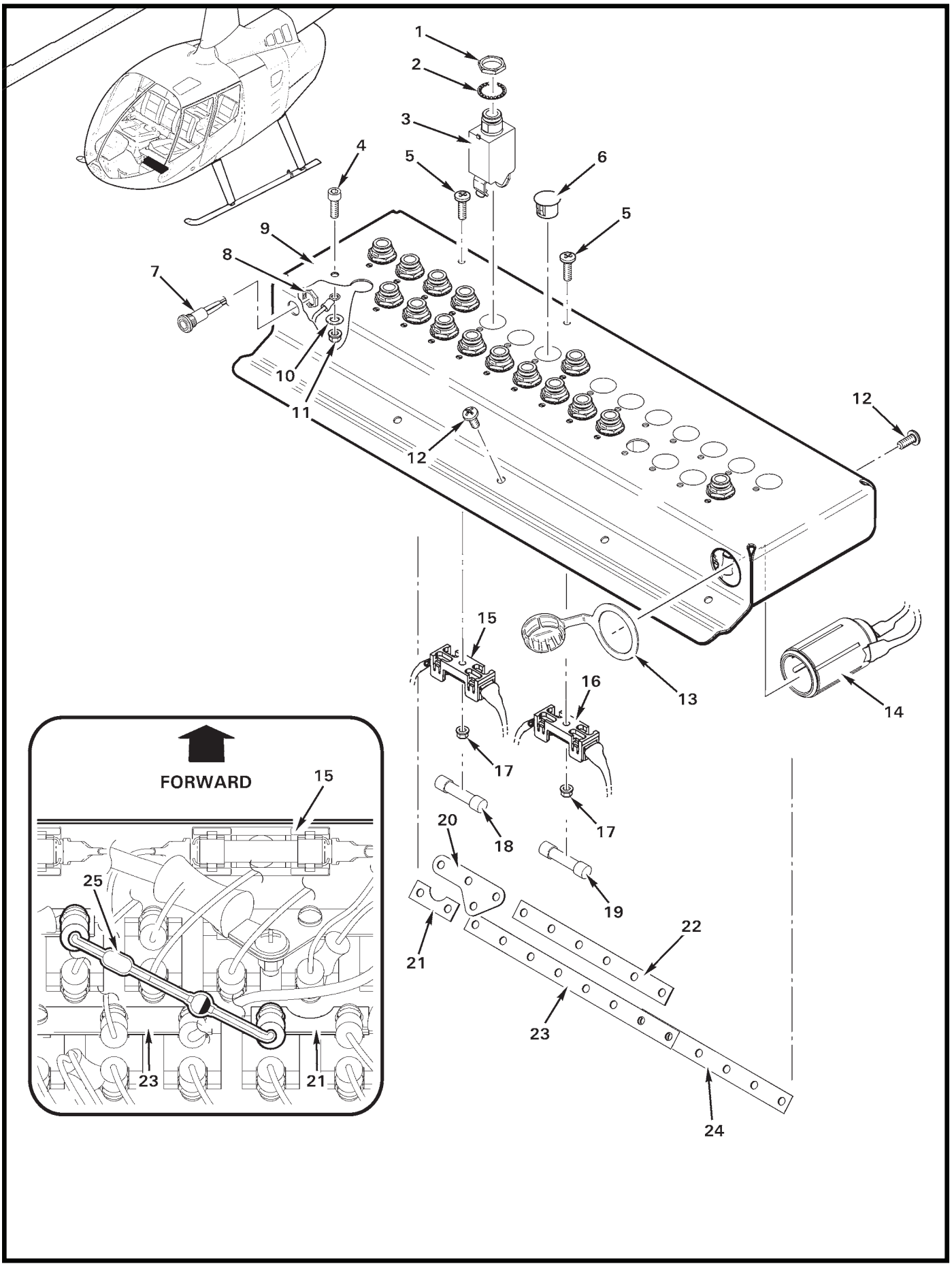
1
2
3
4
5
6
5
9
8
7
10
11
12
12
15
16
13
14
17
17
18
20
19
21
22
23
24
FORWARD
15
25
23
21

FIGURE AND INDEX NUMBER	PART NUMBER	DESCRIPTION	PARTS AVAIL	QTY PER ASSY
		CIRCUIT BREAKER PANEL		
96-21-1	—	Nut	O	1
2	—	Washer	O	1
3	B297-10	Circuit Breaker (10 amp)	X	2
	B297-7	Circuit Breaker (7.5 amp)	X	1
	B297-5	Circuit Breaker (5 amp)	X	2
	B297-2	Circuit Breaker (2 amp)	X	12
4	NAS1352-08-10P	Screw	X	A/R
5	MS35206-227	Screw	X	2
6	2633	Hole Plug	X	A/R
7	C049-14	Harness Assembly (aux audio IN)	X	1
8	—	Nut (included with item 7)	O	1
9	F490-1	Panel Assembly (28-hole)	X	1
	F490-3	Panel Assembly (32-hole, not shown)	X	1
10	NAS1149DN832H	Washer	X	1
11	MS21042L08	Nut	X	1
12	MS27039C0806	Screw	X	10
13	D692-3	Cover	X	1
14	D692-4	Socket (28-volt)	X	1
15	D262-1	Fuseblock (hourmeters)	X	1
16	D262-1	Fuseblock (EMU)	X	1
17	MS21042L06	Nut	X	2
18	AGC-1	Fuse (1 amp, hourmeters)	X	1
19	AGC-3	Fuse (3 amp, EMU)	X	1
20	A448-16	Bus Bar (3 breakers)	X	1
21	A448-3	Bus Bar (2 breakers)	X	1
22	A448-1	Bus Bar (6 breakers; [two] max in place of -4, -9, -10, or -14)	X	A/R
	A448-4	Bus Bar (3 breakers)	X	A/R
	A448-9	Bus Bar (9 breakers)	X	A/R
	A448-10	Bus Bar (4 breakers)	X	A/R
	A448-14	Bus Bar (8 breakers)	X	A/R
23	A448-14	Bus Bar (8 breakers)	X	1
24	A448-1	Bus Bar (6 breakers)	X	1
25	A045-2	Diode Assembly	X	1

NOTES

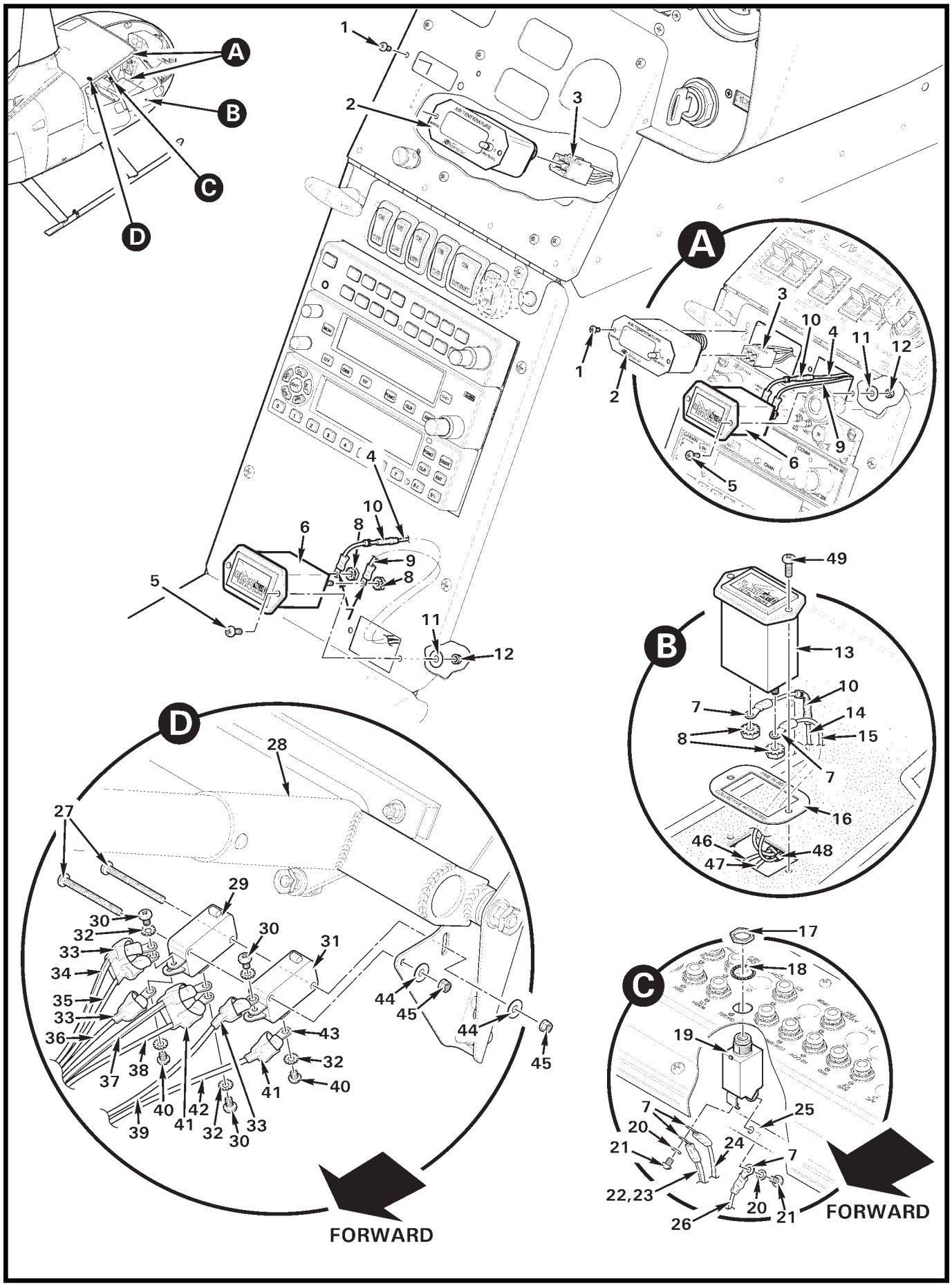

FIGURE 96-23 HOURMETER AND COLLECTIVE-ACTIVATED SWITCHES INSTALLATION

FIGURE AND INDEX NUMBER	PART NUMBER	DESCRIPTION	PARTS AVAIL	QTY PER ASSY
		HOURMETER AND COLLECTIVE-ACTIVATED SWITCHES INSTALLATION		
96-23-1	—	Screw (4-40)	O	2
2	B341-1	Gage – Outside Air Temp (Incl item 1)	X	1
3	B341-4	Probe Assembly	X	1
4	-2053	Wire (Ref)		
5	MS35206-228	Screw	X	4
6	D830-2	Hourmeter – Engine (Incl item 8)	X	1
7	B260-2	Terminal	X	7
8	—	Lock Nut	O	4
9	-2052	Wire (Ref)		
10	D275-101	Diode (1N4005)	X	2
11	NAS620-6L	Washer	X	2
12	MS21042L06	Nut	X	2
13	D830-2	Hourmeter – Collective Activated (Incl item 8)	X	1
14	-1604	Wire (Ref)		
15	-1605	Wire (Ref)		
16	B417-2	Faceplate	X	1
17	—	Nut	O	1
18	—	Lockwasher	O	1
19	B297-2	Circuit Breaker (2 amp, includes items 17 and 18)	X	1
20	—	Washer	O	2
21	—	Screw	O	2
22	-129	Wire (Ref)		
23	-1958	Wire (Ref)		
24	-4	Wire (Ref)		
25	A448-14	Bus Bar (8-hole, Ref)		
26	-661	Wire (Ref)		
27	MS35206-324	Screw	X	2
28	C758-2	Stick Assembly (Ref, see Figure 67-21)		
29	V3-1	Switch – Micro (hourmeter; includes items 30, 32 and 40)	X	1
30	MS35206-212	Screw (replaces screw supplied with switch)	X	3
31	V3-1	Switch – Micro (low RPM warning; incl items 30, 32 and 40)	X	1
32	—	Lockwasher	O	5
33	B158-6	Heat Shrink (earlier ships)	X	A/R

NOTES

Continues

FIGURE AND INDEX NUMBER	PART NUMBER	DESCRIPTION	PARTS AVAIL	QTY PER ASSY
		HOURMETER AND COLLECTIVE-ACTIVATED SWITCHES INSTALLATION (Cont'd)		
96-23-34	-1556	Wire (Ref)		
	-1604	Wire (Ref)		
35	-2325	Wire (Ref)		
	-2600	Wire (Ref)		
36	-2344	Wire (Ref)		
	-2599	Wire (Ref)		
37	-1898	Wire (Ref)		
	-2031	Wire (Ref)		
38	-2052	Wire (Ref)		
39	-78	Wire (Ref)		
40	—	Screw	O	2
41	B158-4	Heat Shrink (earlier ships)	X	A/R
42	-2301	Wire (Ref)		
43	B260-1	Terminal	X	7
44	NAS1149FN416P	Washer	X	2
45	MS21042L04	Nut	X	2
46	-108	Wire (Ref)		
47	-1964	Wire (Ref)		
48	MS3367-4-9	Ty-rap	X	A/R
49	MS35206-232	Screw	X	2

NOTES

Intentionally Blank

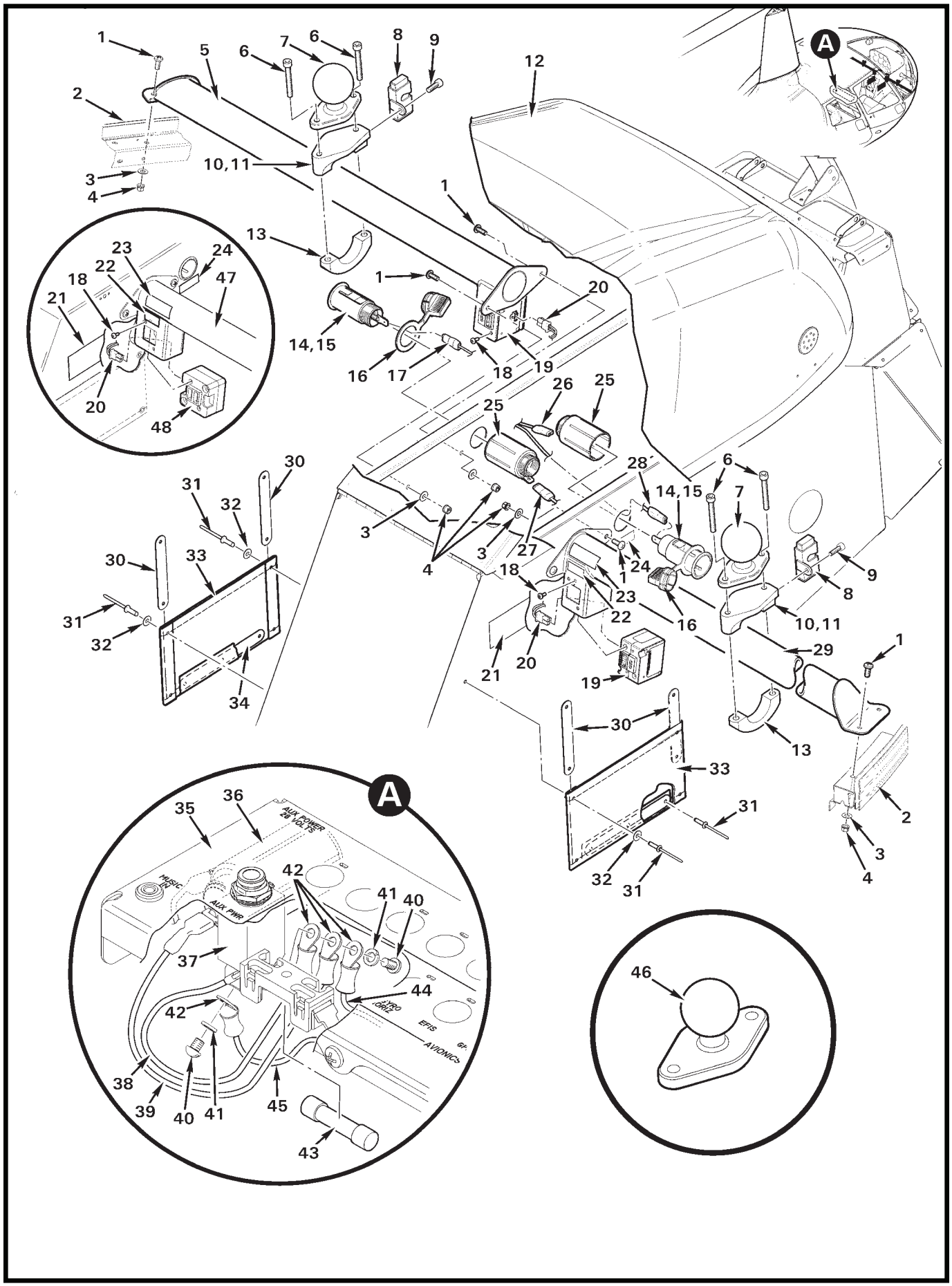

FIGURE 96-27 ACCESSORY BARS INSTALLATION

FIGURE AND INDEX NUMBER	PART NUMBER	DESCRIPTION	PARTS AVAIL	QTY PER ASSY
		ACCESSORY BARS INSTALLATION		
96-27-1	MS27039C0806	Screw	X	8
2	F015	Cabin Assembly (Ref)		
3	NAS1149FN816P	Washer	X	8
4	MS21042L08	Nut	X	8
5	G703-15	Support Assembly (LH)	O	1
6	NAS1351-3-24	Screw	X	4
7	RAM-238U	Mount (1.5-inch diameter ball)	X	A/R
8	B631-1	Clamp Assembly	X	1
9	NAS1352-08-8	Screw	X	1
10	B630-1	Clamp Assembly (Incl items 11 and 13)	X	A/R
11	B630-3	Clamp	X	1
12	G050	Console Assembly (Ref)		
13	B630-2	Clamp Assembly	X	1
14	D692-4	Socket (Incl items 15 and 25)	X	2
15	205471	Switch Base (Ref)		
16	D692-3	Cover	X	1
17	B262-5	Receptacle	X	1
	F859-2690	Wire (power, Ref)		
	F859-2692	Wire (power, Ref)		
	B158-4	Heat Shrink	X	A/R
18	MS35206-213	Screw	X	4
19	6430202-2	USB Port (dual, type A and C)	O	2
20	1445022-2	Housing	O	2
	1-794610-1	Socket	O	2
	-2578	Wire (power, pin “A”; Ref)		
	-2579	Wire (ground, pin “B”; Ref)		
21	G682-15	Decal – “CAUTION ENSURE ACCESSORIES...”	X	1
22	F654-49	Decal – “AUX PWR 5V”	X	1
23	G682-14	Decal – “MAXIMUM LOAD: 10 LB (4.5 KG)”	X	1
24	G682-16	Decal – “28 VOLTS 2 AMPS MAX”	X	1
25	210664	Clamp Shell (Ref)		
26	B262-4	Receptacle	X	1
	-2693	Wire (ground; Ref)		

NOTES

Continues

FIGURE AND INDEX NUMBER	PART NUMBER	DESCRIPTION	PARTS AVAIL	QTY PER ASSY
		ACCESSORY BARS INSTALLATION (Cont'd)		
96-27-27	B262-5	Receptacle	X	1
	-2691	Wire (ground, Ref)		
	-2693	Wire (ground, Ref)		
	B158-4	Heat Shrink	X	A/R
28	B262-4	Receptacle	X	1
	-2692	Wire (power, Ref)		
29	G703-16	Support Assembly (RH)	O	1
30	A913-6	Strip	X	2
31	B204-2	Rivet	X	7
32	NAS1149FN632P	Washer	X	4
33	A912-7	Pocket Assembly	X	1
34	A913-1	Strip	X	2
35	F490-3	Panel Assembly – Circuit Breaker (Ref)		
36	D692-4	Socket (Ref)		
37	B297-10	Circuit Breaker (10 amp, "AUX PWR"; includes items 40 and 41)	X	1
38	F859-626	Wire (to fuse, Ref)		
39	-626	Wire (to item 36, Ref)		
40	—	Screw	O	1
41	—	Washer	O	1
42	B260-2	Terminal	X	3
43	AGC-5-R	Fuse (5 amp)	X	1
44	F859-2690	Wire (Ref; to item 14, RH)		
45	F859-2570	Wire (Ref; to "AVIONICS FAN" circuit breaker)		
46	RAM-B-238U	Mount Assembly (1-inch diameter ball)	X	A/R
47	G705-6	Support Assembly (Ref; RH, earlier ships)		
	G705-9	Support Assembly (Ref; LH, earlier ships)		
48	6430102-2	USB Port (installed with item 47 only)	X	2

NOTES

Intentionally Blank

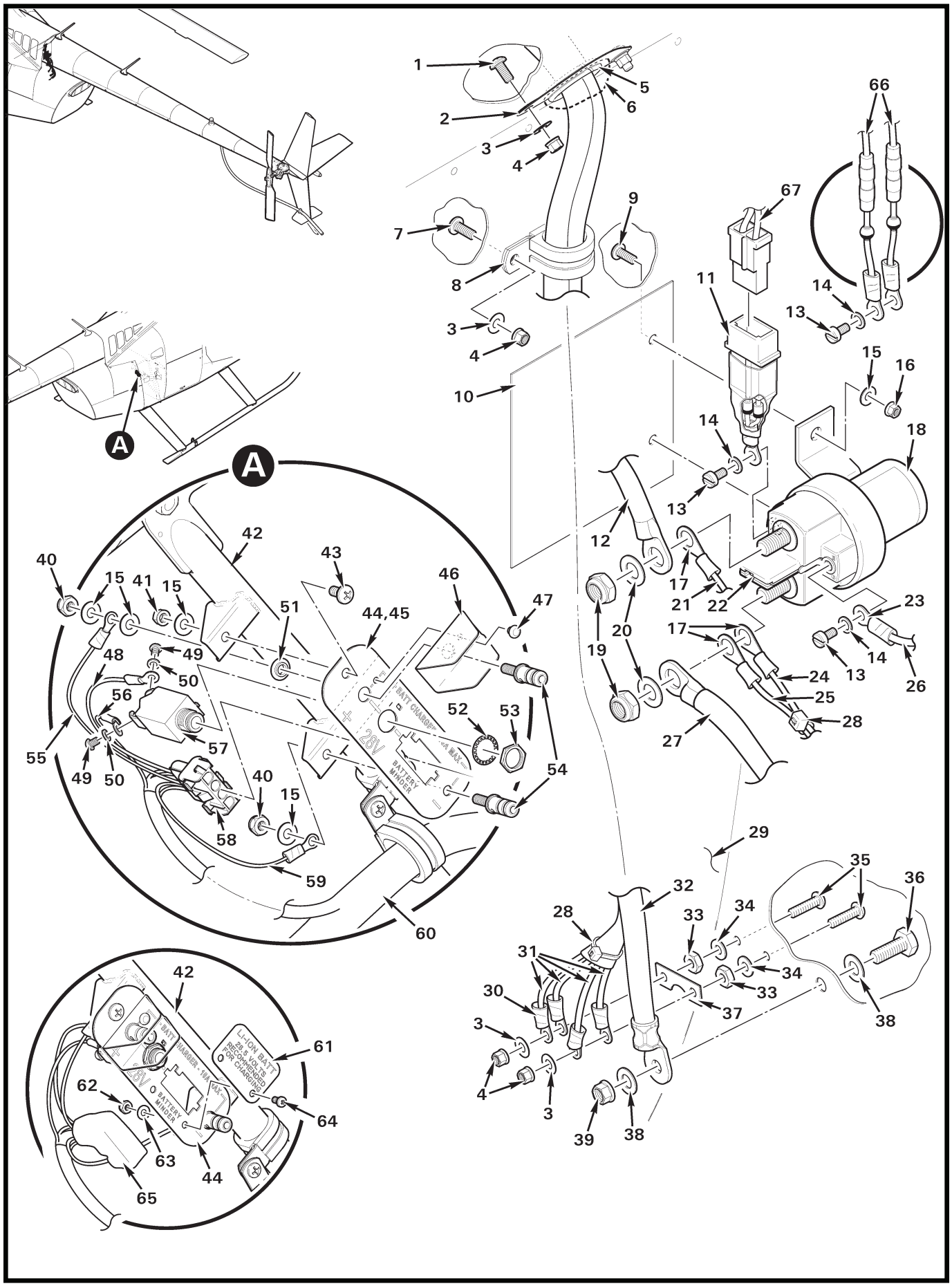

FIGURE 96-31 STARTER GENERATOR RELAY AND BATTERY MINDER INSTALLATION

FIGURE AND INDEX NUMBER	PART NUMBER	DESCRIPTION	PARTS AVAIL	QTY PER ASSY
		STARTER GENERATOR RELAY AND BATTERY MINDER INSTALLATION		
96-31-1	MS27039C0805	Screw	X	2
2	A453-7	Plate	X	2
3	NAS1149FN816P	Washer	X	5
4	MS21042L08	Nut	X	5
5	NAS557-14A	Grommet	X	1
6	B270-5	Sealant	X	A/R
7	MS27039C0806	Screw	X	1
8	MS21919WCH__	Clamp (select clamp size as required to prevent slack around harness)	X	1
9	MS27039C1-07	Screw	X	2
10	C452-5	Guard	X	1
11	B304-17	Diode Assembly	X	1
12	F859-1386	Wire (Ref)		
13	01003621	Screw	X	2
14	01004635	Washer	X	2
15	NAS1149F0332P	Washer	X	6
16	MS21042L3	Nut	X	2
17	B260-6	Terminal	X	2
18	B415-2	Relay (starter/generator; includes items 26, 27, 41, 42, and 54)	X	1
19	MS21044B5	Nut	O	2
20	01000424	Washer	X	2
21	F049-1979	Wire (Ref)		
22	01009214	Suppression Diode Assembly	X	1
23	B260-2	Terminal	X	3
24	F049-1981	Wire (Ref)		
25	F859-2313	Wire (Ref)		
26	F859-1976	Wire (Ref; ground)		
27	A780-71	Cable Assembly		
28	MS3367-4-9	Ty-Rap	X	A/R
29	F233-1	Firewall – Vertical (Ref)		
30	B260-3	Terminal	X	4
31	F859-1944	Wire (ground, Ref)		
	F859-1976	Wire (ground, Ref)		
	F859-2292	Wire (ground, Ref)		
	F859-2574	Wire (ground, Ref)		

NOTES

Continues

FIGURE AND INDEX NUMBER	PART NUMBER	DESCRIPTION	PARTS AVAIL	QTY PER ASSY
		STARTER GENERATOR RELAY AND BATTERY MINDER INSTALLATION (Cont'd)		
96-31-32	A780-72	Cable Assembly		
33	B301-8	Nut	X	2
34	NAS1149DN832H	Washer	X	2
35	B567-43	Screw	X	2
36	AN4-4A	Bolt	X	1
37	A448-3	Bus Bar	X	1
38	NAS1149F0432P	Washer	X	2
39	MS21042L4	Nut	X	1
40	MS24044N3	Nut	X	2
41	D210-3	Nut	X	1
42	F046	Frame Weldment – RH (Ref)		
43	MS27039C1-07	Screw	X	1
44	G597-8	Post Assembly – Battery Minder (Incl items 15 [3], 40, 45 thru 47, 51, 54, 57, and 58)	X	1
45	G598-3	Faceplate	X	1
46	C452-7	Guard	O	1
47	SR-3035B	Rivet	X	1
48	F049-2572	Wire (Ref)		
49	—	Screw	O	2
50	—	Washer	O	2
51	C26005	Washer	X	1
52	—	Lockwasher	O	1
53	—	Nut	O	1
54	G597-7	Post	X	2
55	-2573	Wire (Ref)		
56	F049-2324	Wire (Ref)		
57	B297-10	Circuit Breaker (10 amp, includes items 49, 50, 52, and 53	X	1
58	B263-68	4-Contact Cap (Universal Mate-N-Lok)	X	1
	B263-51	Pin	X	1
	B263-55	Pin	X	3
59	F049-2575	Wire (Ref)		
60	F859	Wire Harness (Ref)		
61	G598-4	Cover (when Li-Ion battery is installed)	X	1
62	MS21042L04	Nut	X	2

NOTES

Continues

FIGURE AND INDEX NUMBER	PART NUMBER	DESCRIPTION	PARTS AVAIL	QTY PER ASSY
		STARTER GENERATOR RELAY AND BATTERY MINDER INSTALLATION (Cont'd)		
96-31-63	NAS1149FN416P	Washer	X	2
64	MS35206-214	Screw	X	2
65	B158-16	Heat Shrink (when Li-Ion battery is installed)	X	A/R
66	B260-2	Terminal (earlier ships)	X	2
	B261-2	Splice (earlier ships)	X	2
	A15A	Diode (earlier ships)	X	2
	B158-103	Heat Shrink (earlier ships)	X	A/R
67	F859-1975	Wire (Ref)		
	F859-1980	Wire (Ref)		

NOTES

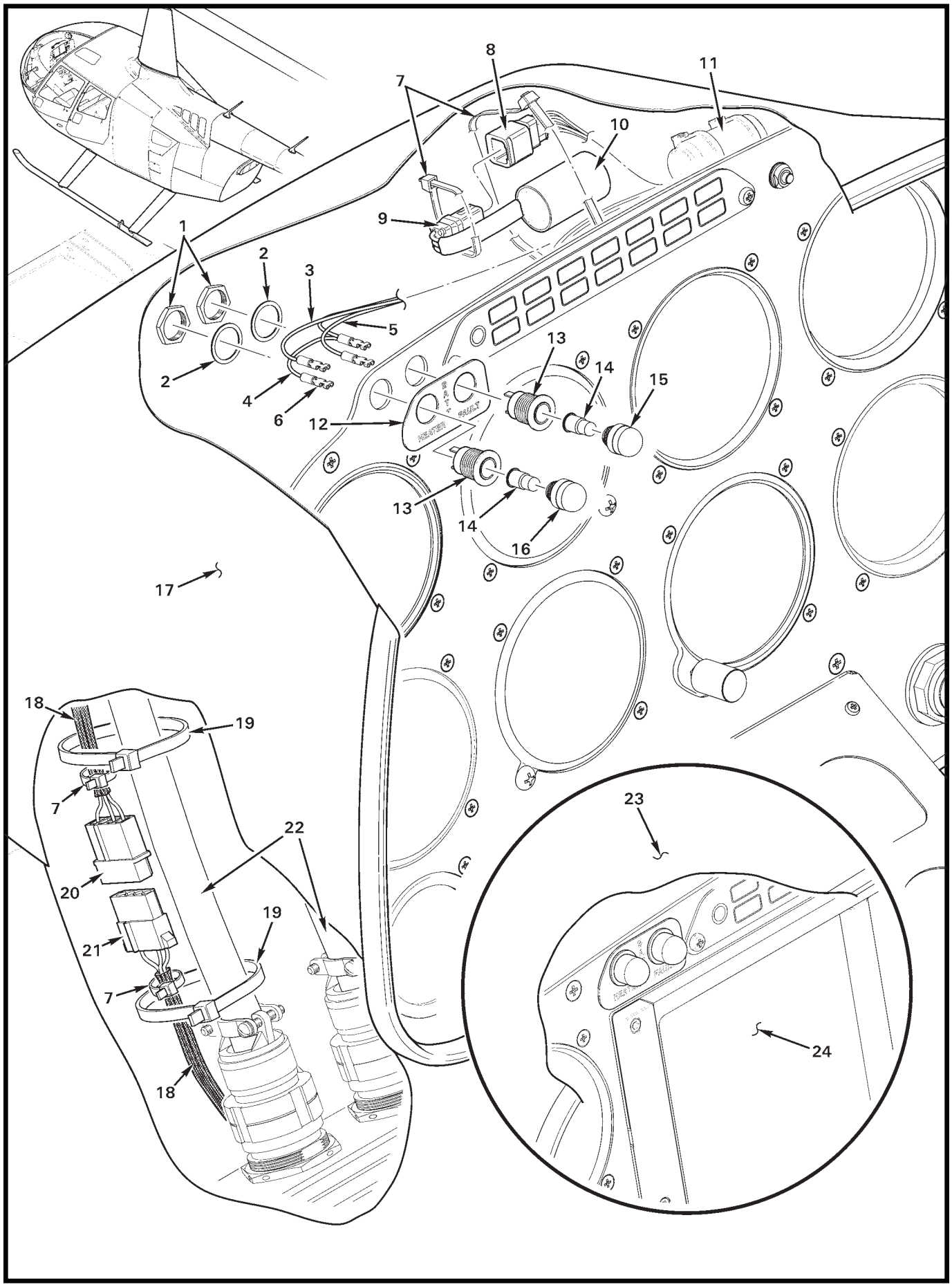

FIGURE 96-35 LITHIUM-ION BATTERY INDICATOR LIGHTS

FIGURE AND INDEX NUMBER	PART NUMBER	DESCRIPTION	PARTS AVAIL	QTY PER ASSY
		LITHIUM-ION BATTERY INDICATOR LIGHTS		
96-35-1	—	Nut	O	1
2	—	Lock Washer (internal tooth)	O	1
3	-2841	Wire (Ref, to F493-4 relay assembly)		
4	-2839	Wire (Ref, jumper)		
5	-2840	Wire (Ref, to F493-4 relay assembly)		
6	B262-1	Receptacle	X	4
7	MS3367-4-9	Ty-Rap	X	A/R
	MS3367-5-9	Ty-Rap	X	A/R
8	D269-11	Plug (9-socket)	X	1
9	D269-12	Receptacle (9-pin)	X	1
10	F693-4	Relay Assembly (Incl item 9; Rev. B or subsequent, indicator lights)	X	1
11	G655-2	Time Delay Assembly (Ref; fuel filter warning)		
12	G468-3	Plate	X	1
13	B198-1	Lamp (socket)	X	2
14	B196-21	Light (bulb)	X	2
15	—	Lens (amber)	O	1
16	162-0937	Lens (white)	X	1
17	G050	Console (Ref, eight-hole)		
18	B266-4	Sleeving	X	A/R
19	MS3367-5-0	Ty-Rap	X	A/R
20	B263-36*	Housing (console side)	X	1
	B263-1*	Pin	X	4
	-2836*	Wire (Ref)		
	-2819*	Wire (Ref, white)		
	-2819*	Wire (Ref, blue)		
21	B263-37*	Housing (cabin side)	X	1
	B263-2*	Socket	X	4
	-2836*	Wire (Ref)		
	-2819*	Wire (Ref, white)		
	-2819*	Wire (Ref, blue)		
22	G716	Harness – Electrical (Ref, G050 console)		
	G717	Harness – Electrical (Ref, G060 console)		
23	G060	Console Assembly (Ref)		
24	GDU 620	Display (Ref)		

NOTES * Earlier aircraft. See R66 MM Chapter 90 for schematics. Wires moved to Item 22 at rev. D.

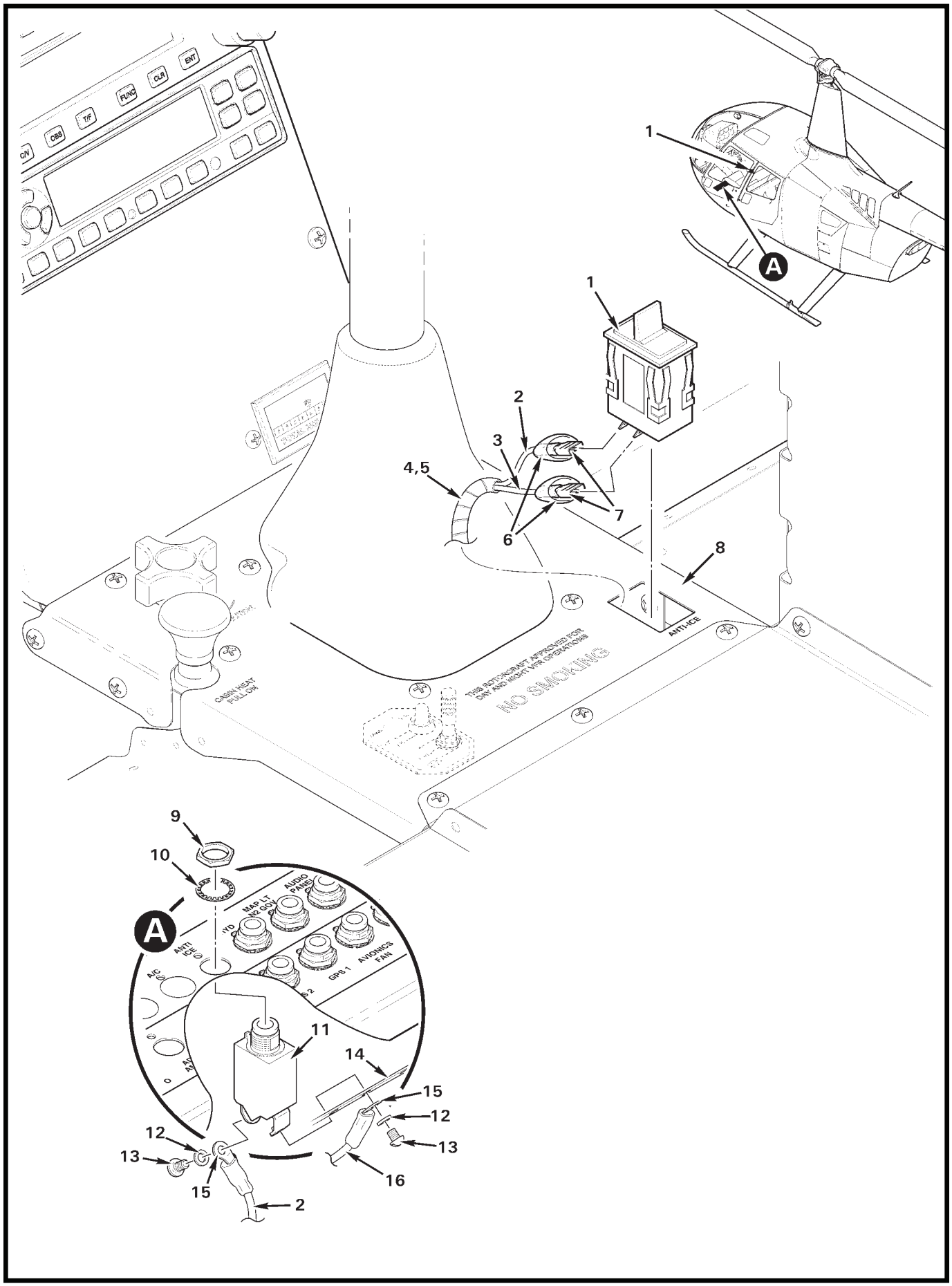

FIGURE 96-37 ANTI-ICE SWITCH INSTALLATION

FIGURE AND INDEX NUMBER	PART NUMBER	DESCRIPTION	PARTS AVAIL	QTY PER ASSY
		ANTI-ICE SWITCH INSTALLATION		
96-37-1	B184-13	Switch Assembly – Anti-ice	X	1
2	-1961	Wire (Ref; power)		
3	-2037	Wire (Ref; anti-ice valve)		
4	B161-2	Spirap (Ref)		
5	F859	Harness Assembly (Ref)		
6	B158-4	Heat Shrink	X	A/R
7	B262-2	Receptacle (Ref)		
8	F444-1	Cover – Cyclic (Ref)		
9	—	Nut	O	1
10	—	Lockwasher	O	1
11	B297-2	Circuit Breaker	X	1
12	—	Washer	O	2
13	—	Screw	O	2
14	A448-1	Bus Bar (Ref)		
15	B260-3	Terminal (Ref)		
16	-2001	Wire (Ref; power to EMU)		

NOTES

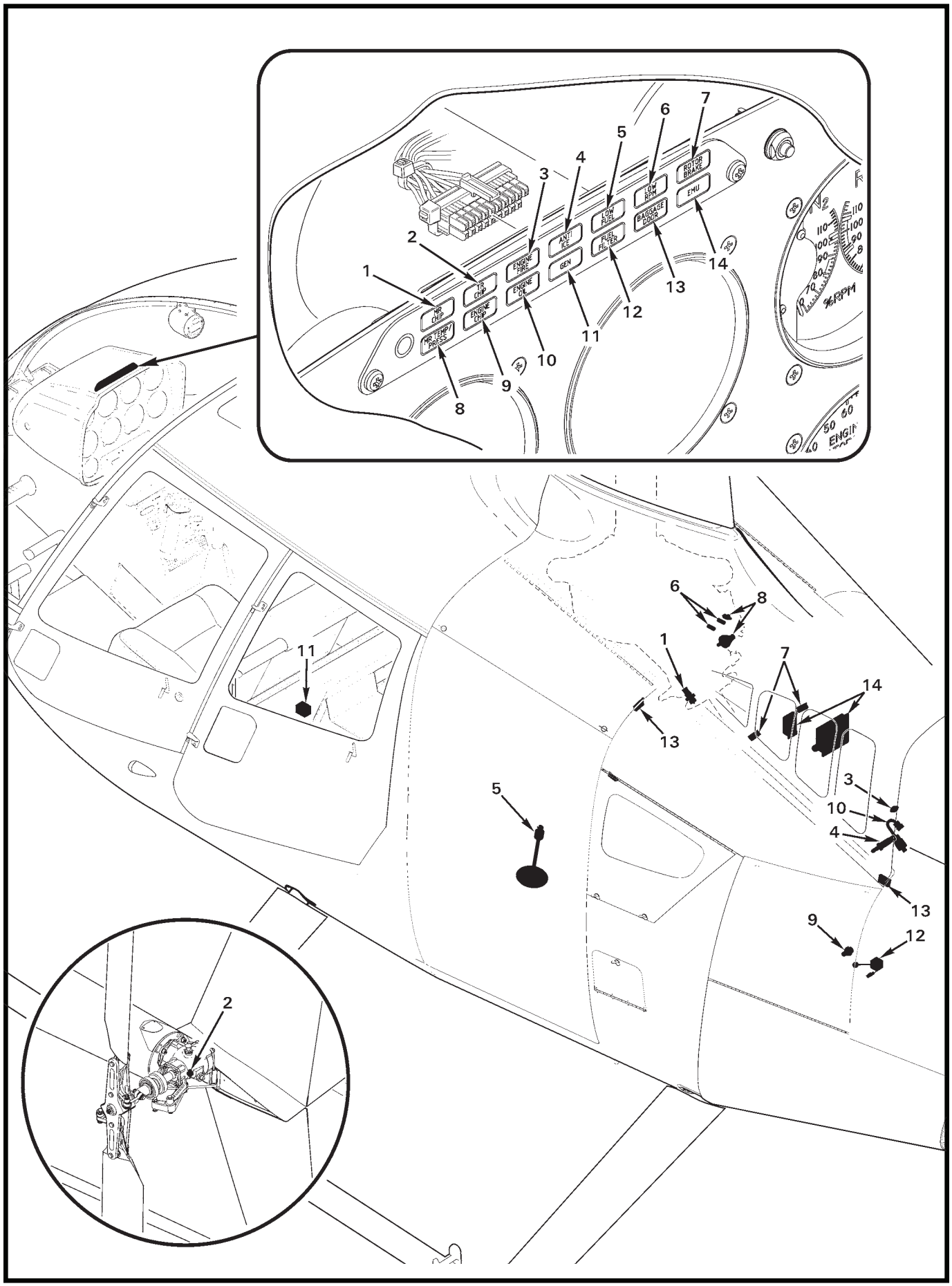

FIGURE 96-39 G198-1 ANNUNCIATOR AND RELATED SENSORS

FIGURE AND INDEX NUMBER	PART NUMBER	DESCRIPTION	PARTS AVAIL	QTY PER ASSY
		G198-1 ANNUNCIATOR AND RELATED SENSORS		
96-39-1	—	Main Rotor Chip Light (Ref, wire G716-3)		
	B566-1	Chip Detector (Ref, see Figure 63-3)		
2	—	Tail Rotor Chip Light (Ref, wire G716-5)		
	B566-2	Chip Detector (Ref, see Figure 65-9)		
3	—	Engine Fire Light (Ref, wire G716-637)		
	A688-2	Switch (Ref; see Figure 96-41)		
4	—	Engine Anti-Ice Light (Ref, wire G716-1945)		
	RR30000270*	Anti-ice Pressure Switch (Ref, see Figure 71-7)		
5	—	Low Fuel Light (Ref, wire G655-2049)		
	A521-2, -4	Low Fuel Switch Assembly (Ref, see Figure 28-7)		
	G655-1	Low Fuel Time Delay Assembly (Ref, see Figures 95-1, 95-23, and 95-31; not shown)		
6	—	Low RPM Light (Ref, wire G716-2035)		
	103SR13A-3	Hall Effect Sensor (Ref, see Figure 63-3)		
	A569-11	Low RPM Warning Unit (Ref, see Figure 95-13, 95-33 or 95-39)		
7	—	Air Filter Light (Ref, wire G716-2272; for)		
	F049-08	Air Filter Harness Assembly (Ref, see Figure 71-9 or 71-11)		
8	—	Main Rotor Temperature and Pressure Light (Ref, wire G716-1899)		
	A688-1	Oil Temperature Switch (Ref, see Figure 63-3)		
	B426-3	Oil Pressure Switch (Ref, see Figure 63-3)		
9	—	Engine Chip Light (Ref, wire G716-1931)		
	6871534*	Oil Plug/Chip Detector (Ref, see Figure 71-5)		
10	—	Engine Oil Light (Ref, wire G716-6)		
	D745-3	Oil Pressure Switch (Ref; see Figure 71-5)		
11	—	Generator [low voltage] Light (Ref, wire G716-1978)		
	LM-1210-E-MABND	Low Voltage Sensor Module (Ref, see Figure 96-41)		
12	—	Fuel Filter Light (Ref, wire G655-2340)		
	G426-1	Fuel Differential Pressure Switch (Ref, see Figure 71-5)		
	G655-2	Fuel Filter Warning Time Delay Assy (Ref, see Figures 95-1, 95-27, and 95-35)		
13	—	Cowl Door Light (Ref, wire G716-1968)		
	D2VW-5L3-1HS	Switch (Ref, see Figures 52-13 and 96-41)		
14	—	EMU Light (Ref, wire G716-2062)		
	F695-4,-1	Warning Light Test Board (Ref, see Figure 97-63)		
	RR30000470*	Engine Monitoring Unit (Ref, see Figure 71-23)		

NOTES * Rolls Royce part number.

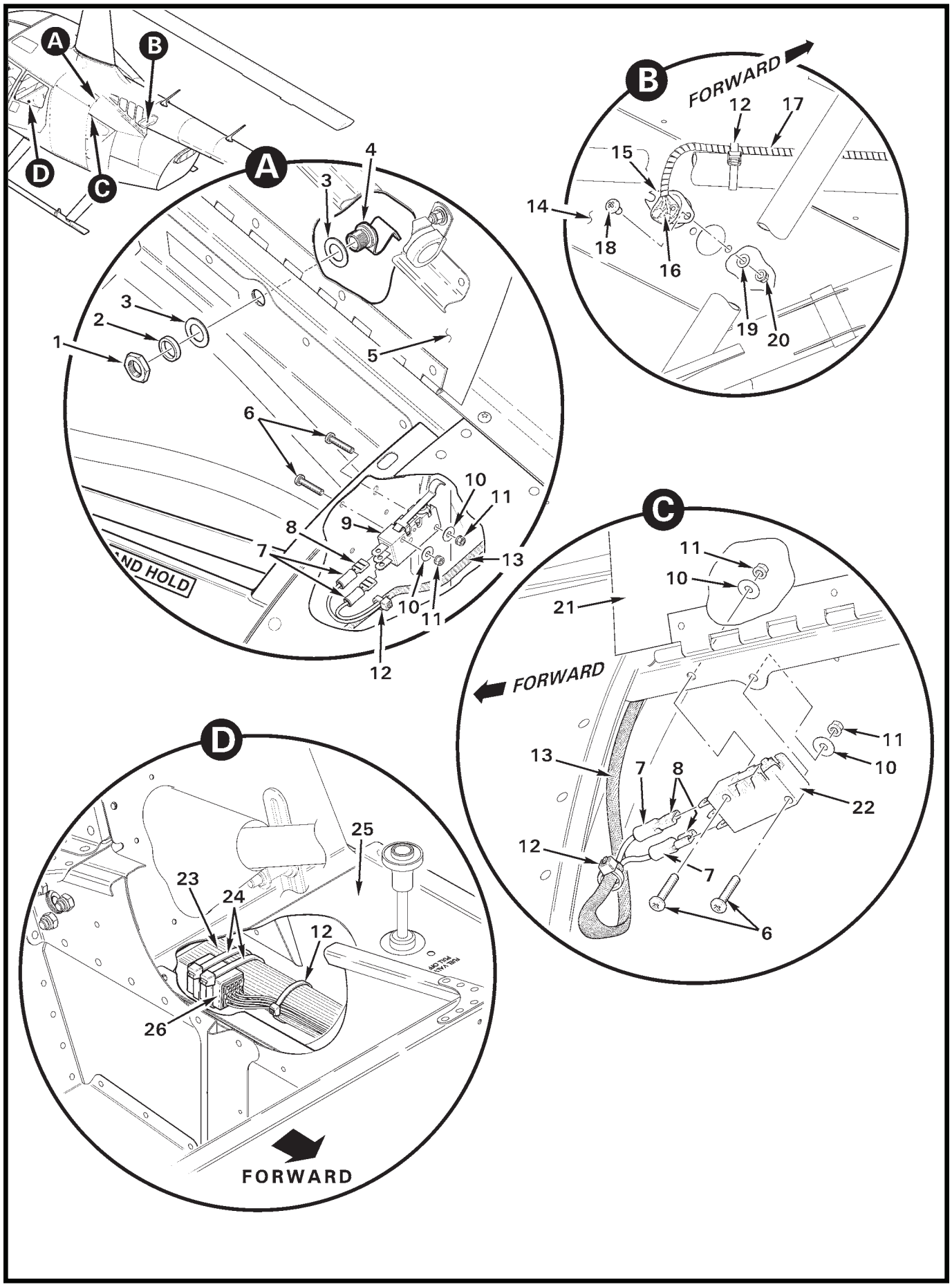
A
B
C
D
FORWARD
12
17
15
14
18
16
19
20
4
3
2
1
5
6
10
11
9
8
7
13
12
21
22
25
23
24
26
FORWARD

FIGURE AND INDEX NUMBER	PART NUMBER	DESCRIPTION	PARTS AVAIL	QTY PER ASSY
		ENGINE FIRE, COWL DOOR AND LOW VOLTAGE SENSORS		
96-41-1	—	Nut	O	1
2	A130-60	Spacer	X	1
3	—	Washer	O	2
4	RB9526	Jack (Incl items 1 and 3)	X	1
5	G004-2	Door (Ref; fuel door)		
6	MS35206-218	Screw	X	2
7	B158-3	Heat Shrink	X	A/R
8	B262-2	Receptacle	X	4
9	D267-1	Switch	X	1
10	NAS1149FN416P	Washer	X	4
11	MS21042L04	Nut	X	4
12	MS3367-4-9	Ty-Rap	X	A/R
13	B266-4	Sleeving	X	A/R
14	G929-1	Cover (Ref)		
15	A688-2	Switch (engine compartment fire)	X	1
16	B270-1	Sealant (covers terminals and top of switch)	X	A/R
17	B161-2	Spirap	X	A/R
18	MS35206-226	Screw	X	2
19	NAS620-6L	Washer	X	2
20	MS21042L06	Nut	X	2
21	G004-10	Door (Ref; gear box door)		
22	D2VW-5L3-1HS	Switch	X	1
23	F859	Harness Assembly – Electrical (Ref; cabin)		
24	MS3367-7-9	Ty-Rap	X	2
25	F445	Cover Assembly (Ref)		
26	LM-1210-E-MABND	Module (low-voltage sensor)	X	1

NOTES

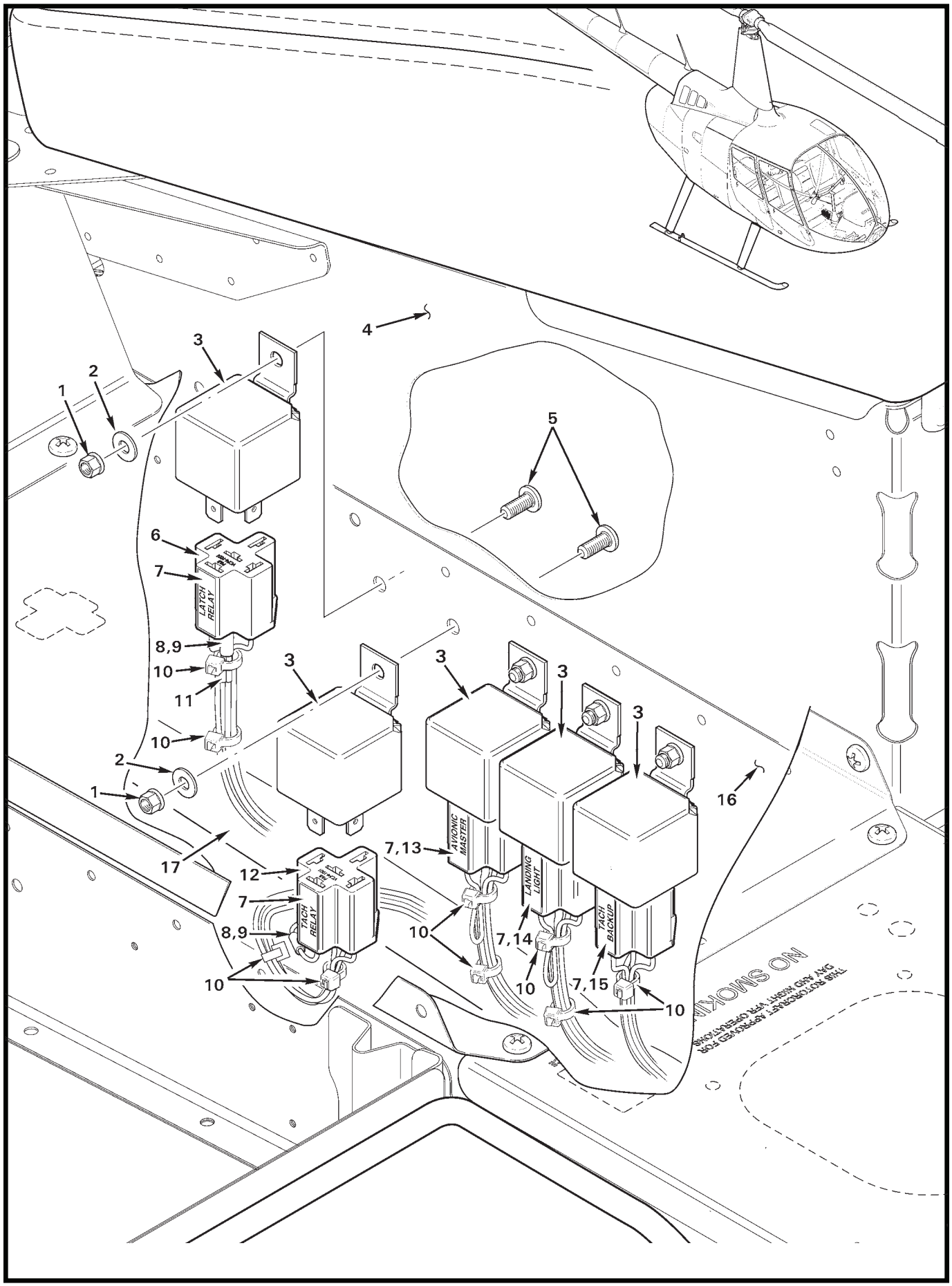

FIGURE 96-43 ELECTRICAL RELAY INSTALLATION

FIGURE AND INDEX NUMBER	PART NUMBER	DESCRIPTION	PARTS AVAIL	QTY PER ASSY
		ELECTRICAL RELAY INSTALLATION		
96-43-1	MS21042L08	Nut	X	5
2	NAS1149FN816P	Washer	X	5
3	D260-4	Relay (40 amp, 24-volt)	X	5
4	F297-2	Support – Seat (Ref; LH, forward)		
5	MS27039C0806	Screw	X	5
6	D260-6	Connector (Incl item 7 label “LATCH RELAY”)	X	1
	B262-6	Receptacle	X	3
	B262-9	Receptacle	X	1
7	B385-12	Label Tape	X	A/R
8	D275-101	Diode	X	2
9	B158-1	Heat Shrink	X	A/R
10	MS3367-4-9	Ty-Rap	X	A/R
11	B267-5	Solder Splice	X	1
12	D260-6	Connector (Incl item 7 label “TACH RELAY”)	X	1
	B262-6	Receptacle	X	3
	B262-9	Receptacle	X	1
13	D260-6	Connector (Incl item 7 label “AVIONIC MASTER”)	X	1
	B262-6	Receptacle	X	2
	B262-9	Receptacle	X	2
14	D260-6	Connector (Incl item 7 label “LANDING LIGHT”)	X	1
	B262-6	Receptacle	X	3
	B262-9	Receptacle	X	1
15	D260-6	Connector (Incl item 7 label “TACH BACKUP”)	X	1
	B262-6	Receptacle	X	4
16	F293-1	Panel – Keel (Ref; LH, forward)		
17	F859	Harness Assembly – Electrical (Ref; cabin)		

NOTES

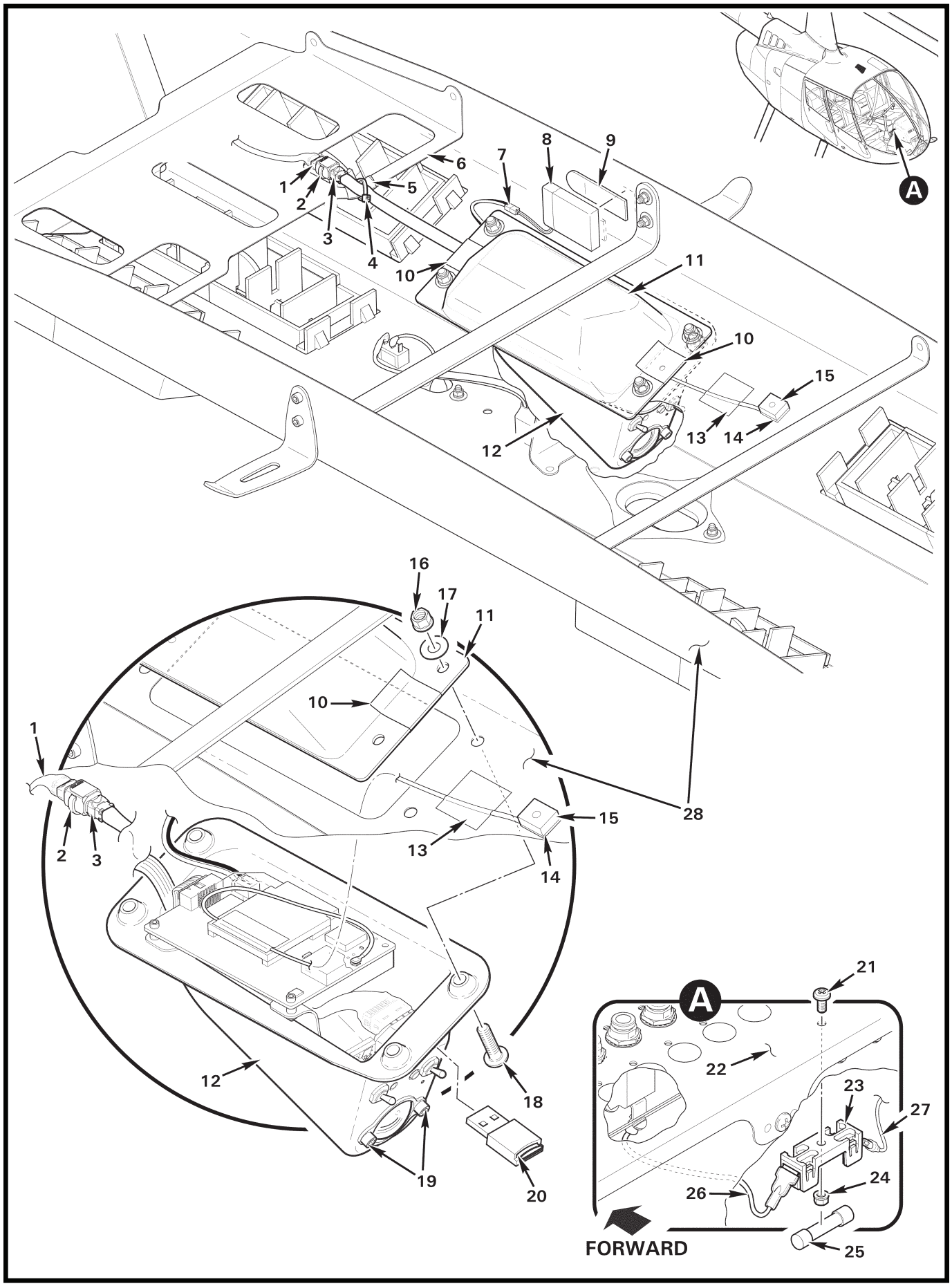

FIGURE 96-45 COCKPIT CAMERA INSTALLATION WITH AIR CONDITIONING

FIGURE AND INDEX NUMBER	PART NUMBER	DESCRIPTION	PARTS AVAIL	QTY PER ASSY
		COCKPIT CAMERA INSTALLATION WITH AIR CONDITIONING		
96-45-1	D269-6	Receptacle (Ref; includes [6] M39029/57-354 sockets. Included with F859 main wire harness assembly.)		
2	MS3367-4-9	Ty-Rap (locks connector)	X	1
3	D269-5	Plug (includes [6] M39029/58-360 pins)	X	1
4	MS3367-4-9	Ty-Rap	X	1
5	A701-8	Tape – Black Vinyl (2 to 5 wraps on item 6)	X	A/R
6	G797-7	Baffle (Ref)		
7	RV-10251C	Battery Extension Harness	X	1
8	RV-BATT-LIPO500	Battery (install using item 9)	X	1
9	1024A38	Adhesive Strip	X	A/R
10	A701-5-1.5	Tape (2-inch wide, 1.5 inch length. Wraps around fwd/aft edge of item 11.)	X	2
11	F712-4	Cover	X	1
12	F039-3	Enclosure Assembly – Cockpit Camera (includes items 3, 7 thru 9, 14, 15, and 19)	X	1
13	A701-1	Tape	X	A/R
14	A701-7	Tape	X	A/R
15	F714-3	Antenna Assembly (install metal side down)	X	1
16	MS21042L08	Nut	X	4
17	NAS1149FN816P	Washer	X	4
18	MS27039C0809	Screw	X	4
19	NAS1352-04-4	Screw	X	2
20	F714-4	Flash Drive Assembly	X	1
21	MS35206-227	Screw	X	1
22	F490	Panel Assembly – Circuit Breaker (Ref)		
23	D262-1	Fuseblock	X	1
24	MS21042L06	Nut	X	1
25	D275-205	Fuse (5 amp)	X	1
26	-3078	Wire (Ref)		
27	-3079	Wire (Ref)		
28	G796-2	Duct Assembly (Incl items 5 and 6.)	X	1
		* * *		

NOTES

Continues

FIGURE AND INDEX NUMBER	PART NUMBER	DESCRIPTION	PARTS AVAIL	QTY PER ASSY
		COCKPIT CAMERA INSTALLATION WITH AIR CONDITIONING (Cont'd)		
96-45-29	KI-271-6*	R44-series & R66, with A/C, Cockpit Camera Installation Kit Instructions. (Kit replaces existing air conditioning duct assembly with air conditioning duct assembly containing camera & antenna, on helicopters equipped with air conditioning & factory-installed cockpit camera provisions. KI-271-6A is eligible for installation on R44 II S/N 14412 & subsequent, and Cadet S/N 30071 & subsequent. KI-271-6B is eligible for installation on R66 S/N 1007 and subsequent.) . .	X	A/R
30	KI-275-5*	R66 (with A/C) Cockpit Camera Installation Kit Instructions. (Eligible for installation on R66 S/N 1006 & prior, with air conditioning. Kit replaces existing air conditioning duct assembly with new air conditioning duct assembly containing camera & antenna.)	X	A/R

NOTES * See https://robinsonheli.com for additional kit information, contents, and instructions.

Intentionally Blank

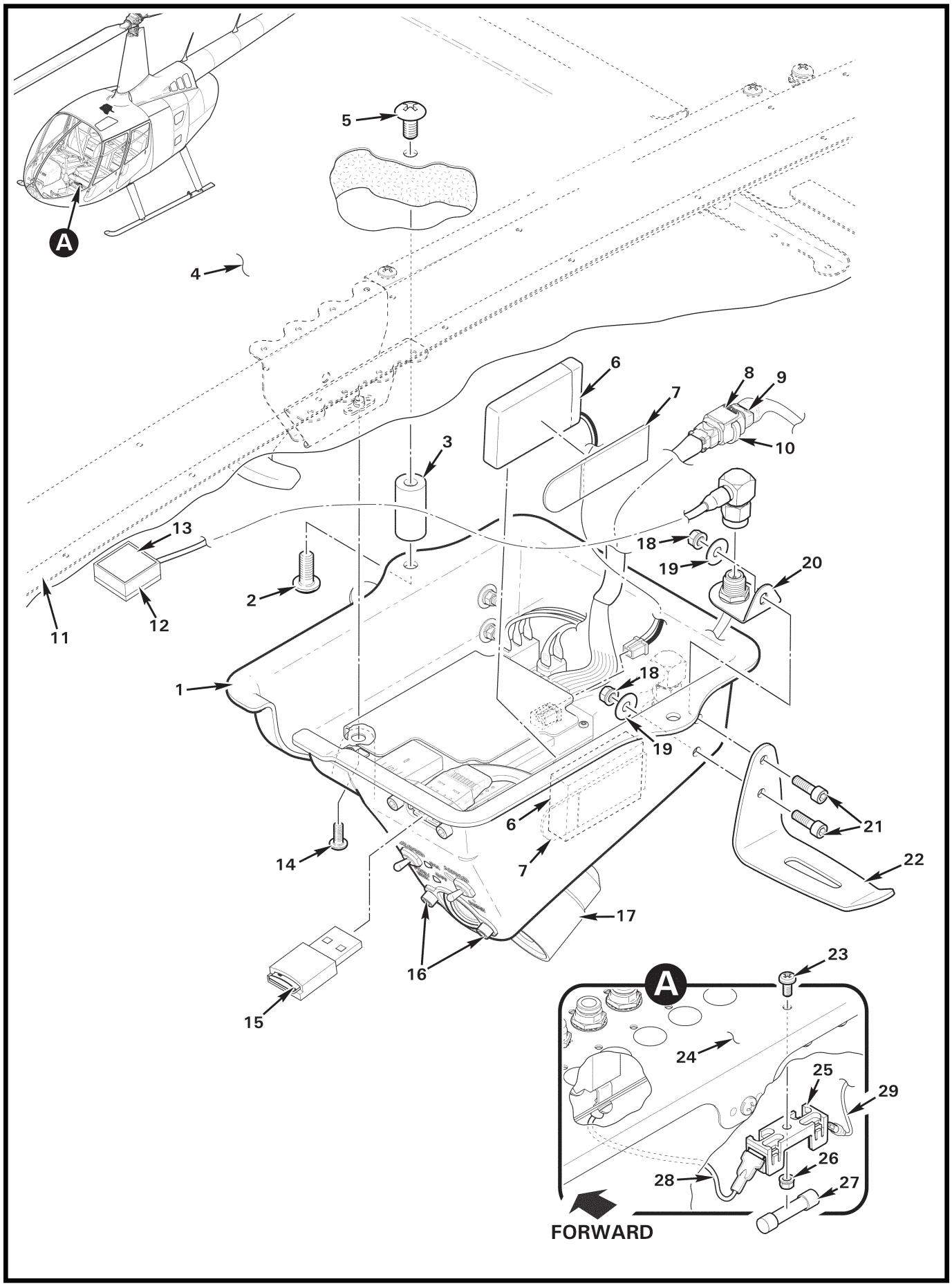

FIGURE 96-49 COCKPIT CAMERA INSTALLATION WITHOUT AIR CONDITIONING

FIGURE AND INDEX NUMBER	PART NUMBER	DESCRIPTION	PARTS AVAIL	QTY PER ASSY
		COCKPIT CAMERA INSTALLATION WITHOUT AIR CONDITIONING		
96-49-1	F039-2	Enclosure Assembly – Cockpit Camera (includes items 6 thru 8, and 16 thru 22)	X	1
2	MS27039C0806	Screw	X	2
3	C710-3	Spacer	X	2
4	F273-1	Roof (Ref; see Figure 33-13)		
5	AN526C832R6	Screw	X	2
6	RV-BATT-LIPO500	Battery (install using item 7)	X	1
7	1024A38	Adhesive Strip	X	1
8	D269-5	Plug (includes [6] M39029/58-360 pins)	X	1
9	D269-6	Receptacle (Ref; includes [6] M39029/57-354 sockets. Included with F859 main wire harness assembly.)		
10	MS3367-4-9	Ty-Rap (locks connector)	X	1
11	F238	Support (Ref)		
12	F714-2	Antenna Assembly (Install metal side down.)	O	1
13	A701-7	Tape	X	A/R
14	MS35206-232	Screw	X	1
15	F714-4	Flash Drive Assembly	X	1
16	NAS1352-04-4	Screw	X	2
17	D606-1	Spotlight (Ref; see Figure 33-13)		
18	MS21042L04	Nut	X	4
19	NAS1149FN416P	Washer	X	4
20	F713-7	Angle	X	1
21	NAS1352-04-3	Screw	X	4
22	A752-2	Angle	X	2
23	MS35206-227	Screw	X	1
24	F490	Panel Assembly – Circuit Breaker (Ref)		
25	D262-1	Fuseblock	X	1
26	MS21042L06	Nut	X	1
27	D275-205	Fuse (5 amp)	X	1
28	-3078	Wire (Ref)		
29	-3079	Wire (Ref)		

* * *

NOTES

Continues

FIGURE AND INDEX NUMBER	PART NUMBER	DESCRIPTION	PARTS AVAIL	QTY PER ASSY
		COCKPIT CAMERA INSTALLATION WITHOUT AIR CONDITIONING (Cont'd)		
96-49-30	KI-271-2**	R44-series & R66 Cockpit Camera Installation Kit Instructions. (Eligible for installation on R44 S/N 2625 & subsequent, R44 II S/N 14412 & subsequent, Cadet S/N 30071 & subsequent, and R66 S/N 1007 & subsequent, without (optional) air conditioning. Installs cockpit camera & antenna on helicopters equipped with factory-installed cockpit camera provisions.)	X	A/R
31	KI-275-3**	R66 Cockpit Camera Installation Kit Instructions (Eligible for installation on R66 S/N 1006 & prior, without air conditioning.)	X	A/R

NOTES * See https://robinsonheli.com for additional kit information, contents, and instructions.

CHAPTER 97

AVIONICS

Figure	Title	Page
97-1	Garmin G500H EFIS – GTN 600/700-series GPS	97.0
97-5	Garmin G500H EFIS – GDC 74H Air Data Computer	97.4
97-9	Garmin G500H EFIS – GRS 77H AHRS	97.8
97-11B	Garmin GSU 75H ADAHRS	97.11A
97-13	Garmin G500H EFIS – GMU 44 Magnetometer	97.12
97-13B	Garmin GMU 44B Magnetometer	97.13A
97-15	Radar Altimeter Indicator – Eight-Instrument Console	97.14
97-17	Radar Altimeter Indicator – Seven/Nine-Instrument Console	97.16
97-19	FreeFlight RA4000/4500 Radar Altimeter Installation	97.18
97-19B	Garmin GRA 55 Radar Altimeter Installation	97.19A
97-21	Garmin GTX 33 Transponder Installation	97.20
97-21B	Garmin GTX 345R Transponder Installation	97.21A
97-23	Garmin GDL 69A XM Receiver Installation	97.22
97-25	Avionics Panel Switches and Garmin GTR 225B COM Radio Inst'l	97.24
97-29	Garmin GDL 88 Receiver (ADS-B) Installation	97.28
97-31	Garmin GTX 3XX Transponder and Blind Encoder Installation	97.30
97-33	Pilot’s Side Console – Garmin GTN 700-Series GPS	97.32
97-37	Pilot’s Side Console – Garmin GTN 600-Series GPS (Single)	97.36
97-39	Pilot’s Side Console – Garmin GTN 600-Series GPS (Dual)	97.38
97-41	Pilot’s Side Console – Garmin 500-Series GPS	97.40
97-45	Pilot’s Side Console – Garmin 400-Series GPS	97.44
97-49	Audio Control Installation	97.48
97-51	Dual Audio Control Installation	97.50
97-53	Audio Control and Intercom Switches Installation	97.52
97-57	Standard Headset Jacks Installation	97.56
97-59	Bose Headset Jacks Installation	97.58
97-61	Bose Headset Jacks Installation	97.60
97-63	Transponder and Blind Encoder Installation	97.62
97-65	ADF System Installation	97.64
97-67	VOR Indicator Installation	97.66
97-69	Spidertracks Provision Installation	97.68

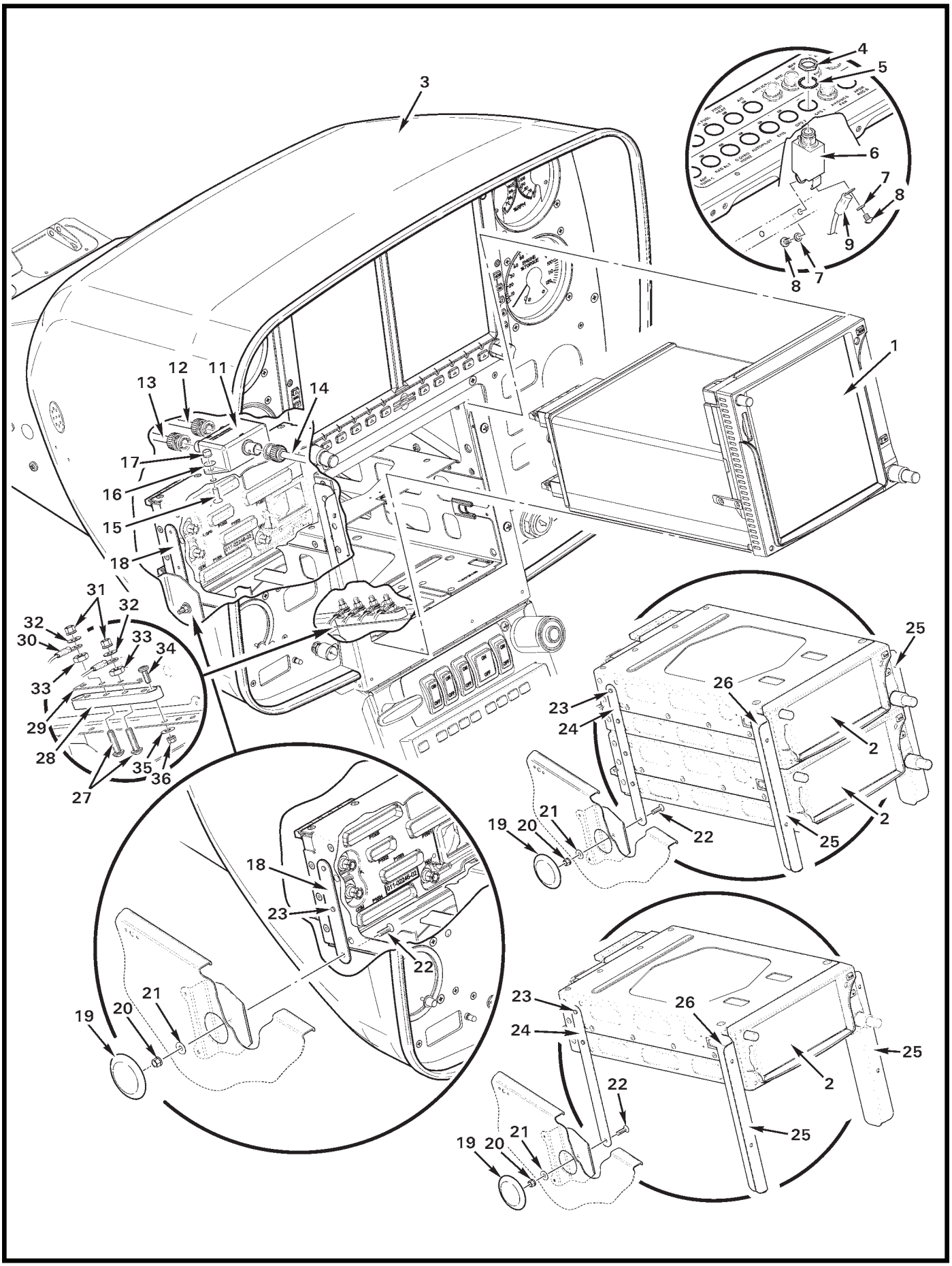
1
2
3
4
5
6
7
8
9
11
12
13
14
15
16
17
18
19
20
21
22
23
24
25
26
27
28
29
30
31
32
33
34
35
36

FIGURE AND INDEX NUMBER	PART NUMBER	DESCRIPTION	PARTS AVAIL	QTY PER ASSY
		GARMIN G500H EFIS – GTN 600/700-SERIES GPS		
97-1-1	GTN 750	Transceiver	X	1
	GTN 725	Transceiver	X	1
2	GTN 650	Transceiver	X	1
	GTN 635	Transceiver	X	1
	GTN 625	Transceiver	X	1
3	G060-3	Console Assembly	X	1
4	—	Nut	O	1
5	—	Lockwasher	O	1
6	B297-5	Circuit Breaker (Incl items 4, 5, 7, and 8)	X	A/R
7	—	Washer	O	1
8	—	Screw	O	1
9	B260-2	Terminal	X	A/R
	-466	Wire (Ref, GPS 1)		
	-1426	Wire (Ref, GPS 2)		
	-200	Wire (Ref, COM 1)		
	-704	Wire (Ref, COM 2)		
10	A448	Bus Bar (Ref)		
11	CI 507	Diplexer	X	1
12	-1847	Cable (Ref, from NAV antenna)		
13	-2730	Cable (Ref, from glideslope antenna)		
14	-2731	Cable (from diplexer to transceiver)	X	1
15	MS24694-3	Screw	X	2
16	NAS1149FN816P	Washer	X	2
17	MS21042L08	Nut	X	2
18	A684-4	Strap	X	2
19	S1413	Hole Plug	X	2
20	MS21042L06	Nut	X	2
21	NAS1149FN616P	Washer	X	2
22	—	Screw (6-32 CSK supplied with radio)	O	2
23	NAS1097AD3	Rivet	X	A/R
24	A684-3	Strap	X	2
25	C905-6	Angle	X	2
26	MS20426AD4	Rivet	X	6
27	B567-43	Screw (install using B270-9 adhesive under head)	X	4
28	C448-2	Terminal Block Assembly	X	1
	C448-4	Block (Ref)		

NOTES

Continues

FIGURE AND INDEX NUMBER	PART NUMBER	DESCRIPTION	PARTS AVAIL	QTY PER ASSY
		GARMIN G500H EFIS – GTN 600/700-SERIES GPS (Cont'd)		
97-1-29	A448-10	Bus Bar	X	1
30	B260-3	Terminal	X	A/R
	-465	Wire (Ref, GPS 1 ground)		
	-427	Wire (Ref, GPS 2 ground)		
	-2506	Wire (Ref, lighting ground)		
	-2537	Wire (Ref)		
	-201	Wire (Ref, COM 1 ground)		
	-704	Wire (Ref, COM 2 ground)		
	-2531	Wire (Ref, ground)		
31	MS21042L08	Nut	X	A/R
32	NAS1149FN816P	Washer	X	A/R
33	B301-8	Nut	X	4
34	MS35206-228	Screw	X	2
35	NAS1149FN616P	Washer	X	2
36	MS21042L06	Nut	X	2

NOTES

Intentionally Blank

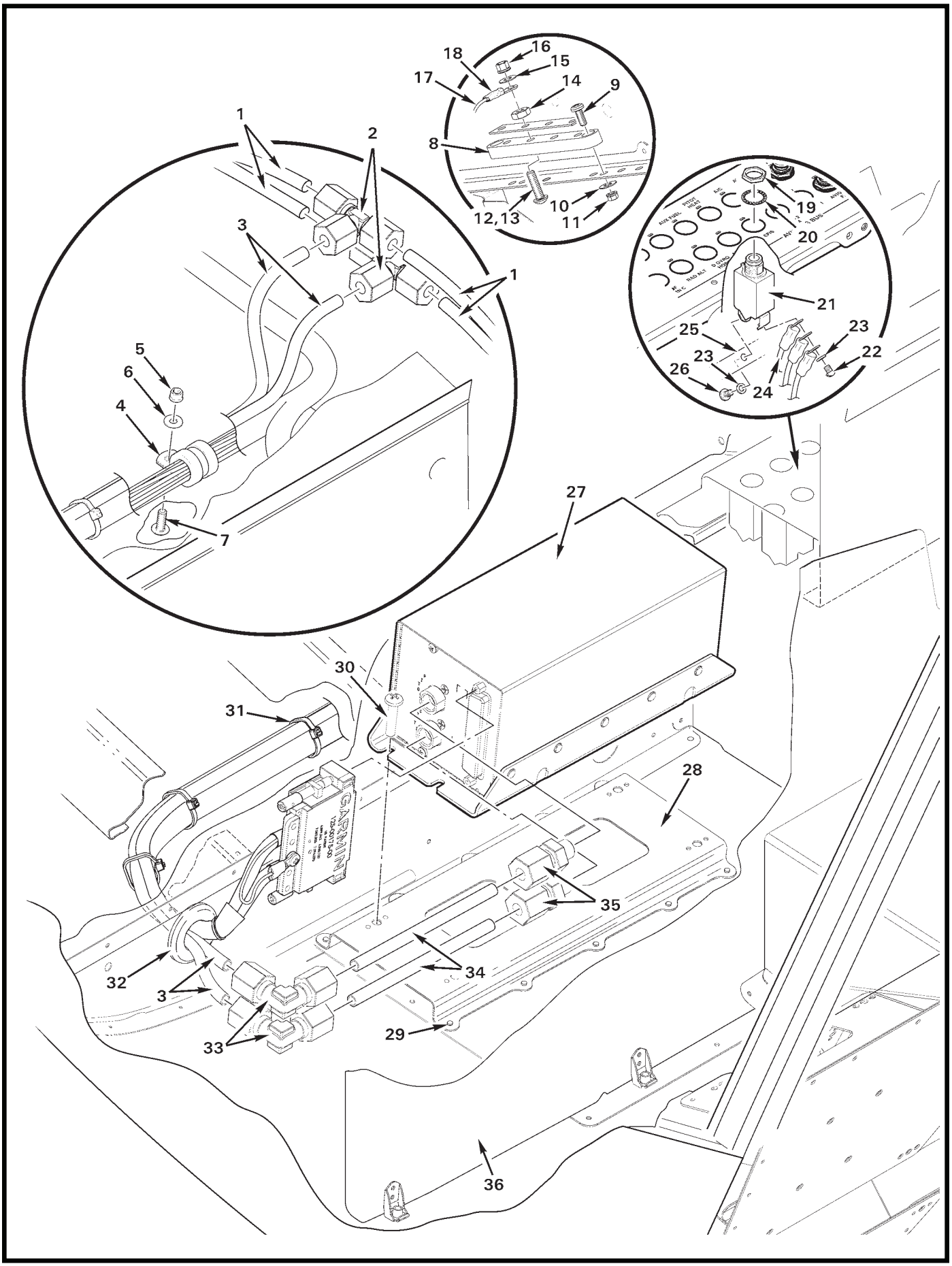
1
2
3
1
4
5
6
7
8
9
10
11
12,13
14
15
16
17
18
19
20
21
22
23
23
24
25
26
27
28
29
30
31
32
3
33
34
35
36
GARMIN

FIGURE AND INDEX NUMBER	PART NUMBER	DESCRIPTION	PARTS AVAIL	QTY PER ASSY
		GARMIN G500H EFIS – GDC 74H AIR DATA COMPUTER		
97-5-1	A729-28	Tube (Ref)		
2	60-4-2-N-0	Tee	X	2
3	A729-22	Tube	X	2
4	MS21919WDG8	Clamp	X	1
5	MS21042L08	Nut	X	1
6	NAS1149FN816P	Washer	X	1
7	AN526C832R8	Screw	X	1
8	C448-2	Block Assembly (Includes C448-5 block, A448-10 bus bar, and items 12 thru 14.)	X	1
	C448-5	Block (Ref)		
9	MS35206-228	Screw	X	2
10	NAS1149FN616P	Washer	X	2
11	MS21042L06	Nut	X	2
12	B567-43	Screw (install using item 13 under screw head)	X	4
13	B270-9	Adhesive	X	A/R
14	B301-8	Nut	X	4
15	NAS1149FN816P	Washer	X	A/R
16	MS21042L08	Nut	X	A/R
17	-2596	Wire (Ref, GDC 74H Computer ground)		
18	B260-3	Terminal	X	A/R
19	—	Nut	X	1
20	—	Lockwasher	X	1
21	B297-5	Circuit Breaker (Incl 19, 20, 22, and 23)	X	1
22	—	Screw (6-32 x 1/4)	X	1
23	—	Washer	X	2
24	-2563	Wire (Ref)		
	-2695	Wire (Ref)		
	-2595	Wire (Ref)		
25	A448	Bus Bar (Ref)		
26	—	Screw (Ref, 6-32 X 3/16)		
27	GDC 74H	Air Data Computer	X	1
28	F950-2	Support Assembly	X	1
29	MS20247AD4	Rivet	X	10
30	MS27039C1-07	Screw	X	4
31	MS3367-4-9	Ty-Rap	X	A/R
32	MS35489-19	Grommet	X	1

NOTES

Continues

FIGURE AND INDEX NUMBER	PART NUMBER	DESCRIPTION	PARTS AVAIL	QTY PER ASSY
		GARMIN G500H EFIS – GDC 74H AIR DATA COMPUTER (Cont'd)		
97-5-33	50-4-N-0	Elbow	X	2
34	A729-26	Tube	X	2
35	10-4-2-N-0	Fitting	X	2
36	F748-1	Cover (Ref)		

NOTES

Intentionally Blank

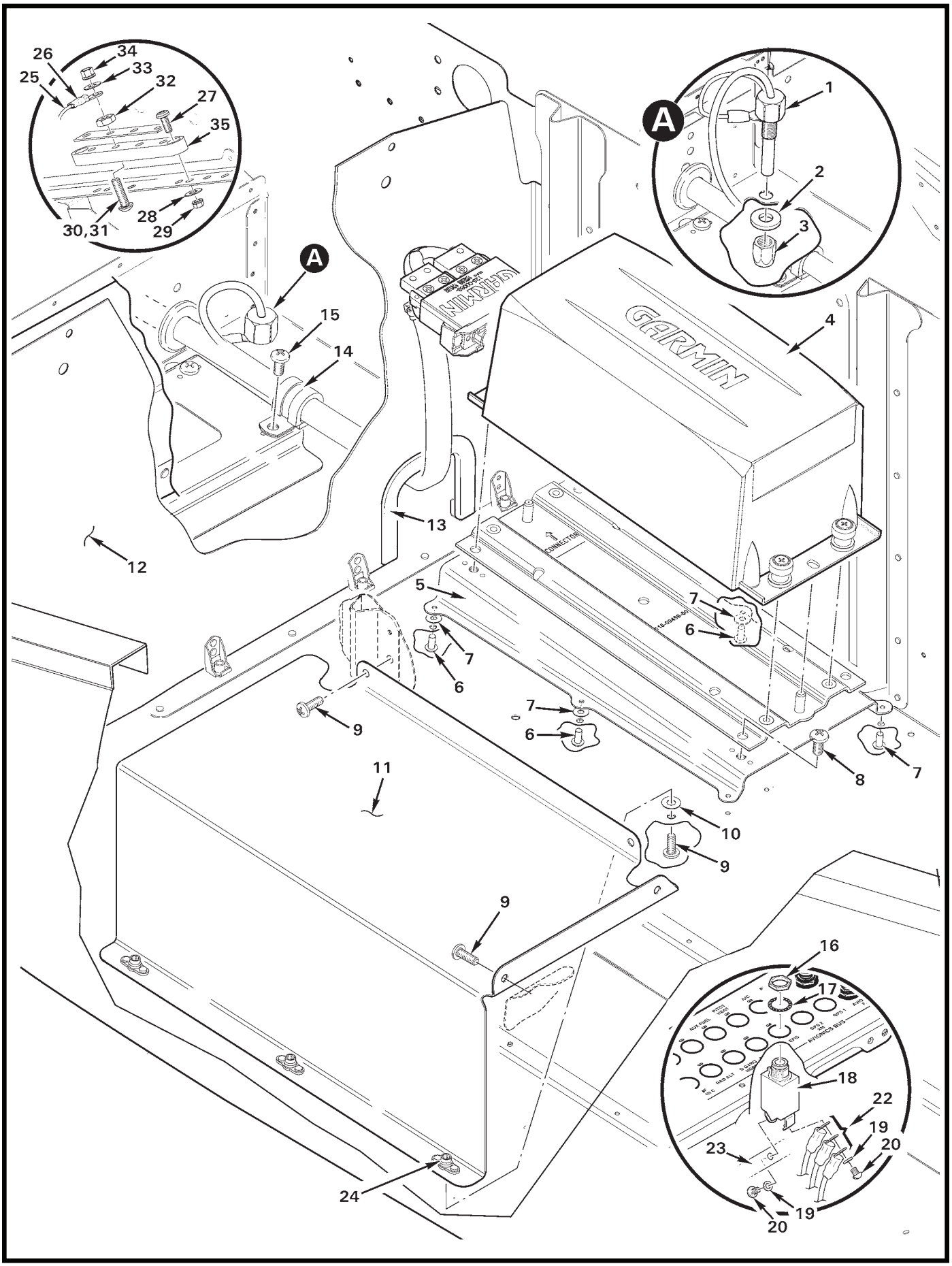
26
34
33
25
32
27
35
30,31
28
29
A
1
2
3
A
15
14
4
GARMIN
13
12
5
7
6
7
6
7
6
9
8
7
11
10
9
9
16
17
18
22
19
20
23
24
19
20

FIGURE AND INDEX NUMBER	PART NUMBER	DESCRIPTION	PARTS AVAIL	QTY PER ASSY
		GARMIN G500H EFIS – GRS 77H AHRS		
97-9-1	GTP 59	Temperature Probe (Incl items 2 and 3)	O	1
2	—	Washer	O	1
3	—	Nut	O	1
4	GRS 77H	Altitude and Heading Reference System (AHRS)	X	1
5	F950-1	Support Assembly	X	1
6	MS20470AD4	Rivet	X	6
7	NAS1149FN416P	Washer (3 under each rivet)	X	18
8	MS27039C1-06	Screw	X	4
9	MS27039C0806	Screw	X	7
10	NAS1149FN816P	Washer (between floor and cover)	X	3
11	F950-3	Cover Assembly	X	1
12	F748-1	Cover Assembly (Ref)		
13	A226-15	Trim	X	A/R
14	MS21919WDG8	Clamp	X	1
15	MS27039C1-07	Screw	X	1
16	—	Nut	O	1
17	—	Washer	O	1
18	B297-5	Circuit Breaker (5 amp; includes 16, 17, 19, and 20)	X	1
19	—	Washer	O	1
20	—	Screw (6-32 x 1/4)	O	A/R
21	-2563	Wire (Ref)		
	-2695	Wire (Ref)		
	-2595	Wire (Ref)		
22	B260-2	Terminal	X	A/R
23	A448	Bus Bar (Ref)		
24	MS21069L08	Nutplate	X	1
	NAS1097AD	Rivet	X	2
25	-2589	Wire (Ref)		
26	B260-3	Terminal	X	A/R
27	MS35206-228	Screw	X	2
28	NAS1149FN616P	Washer	X	2
29	MS20142L06	Nut	X	2
30	B567-43	Screw (install using item 31 under screw head)	X	4
31	B270-9	Adhesive	X	A/R
32	B301-8	Nut	X	4
33	NAS1149FN616P	Washer	X	A/R

NOTES

Continues

FIGURE AND INDEX NUMBER	PART NUMBER	DESCRIPTION	PARTS AVAIL	QTY PER ASSY
		GARMIN G500H EFIS – GRS 77H AHRS (Cont'd))		
97-9-34	MS21042L08	Nut	X	A/R
35	C448-2	Terminal Block Assembly (Incl items 27 thru 34)	X	1
	C448-5	Block (Ref)		

NOTES

Intentionally Blank

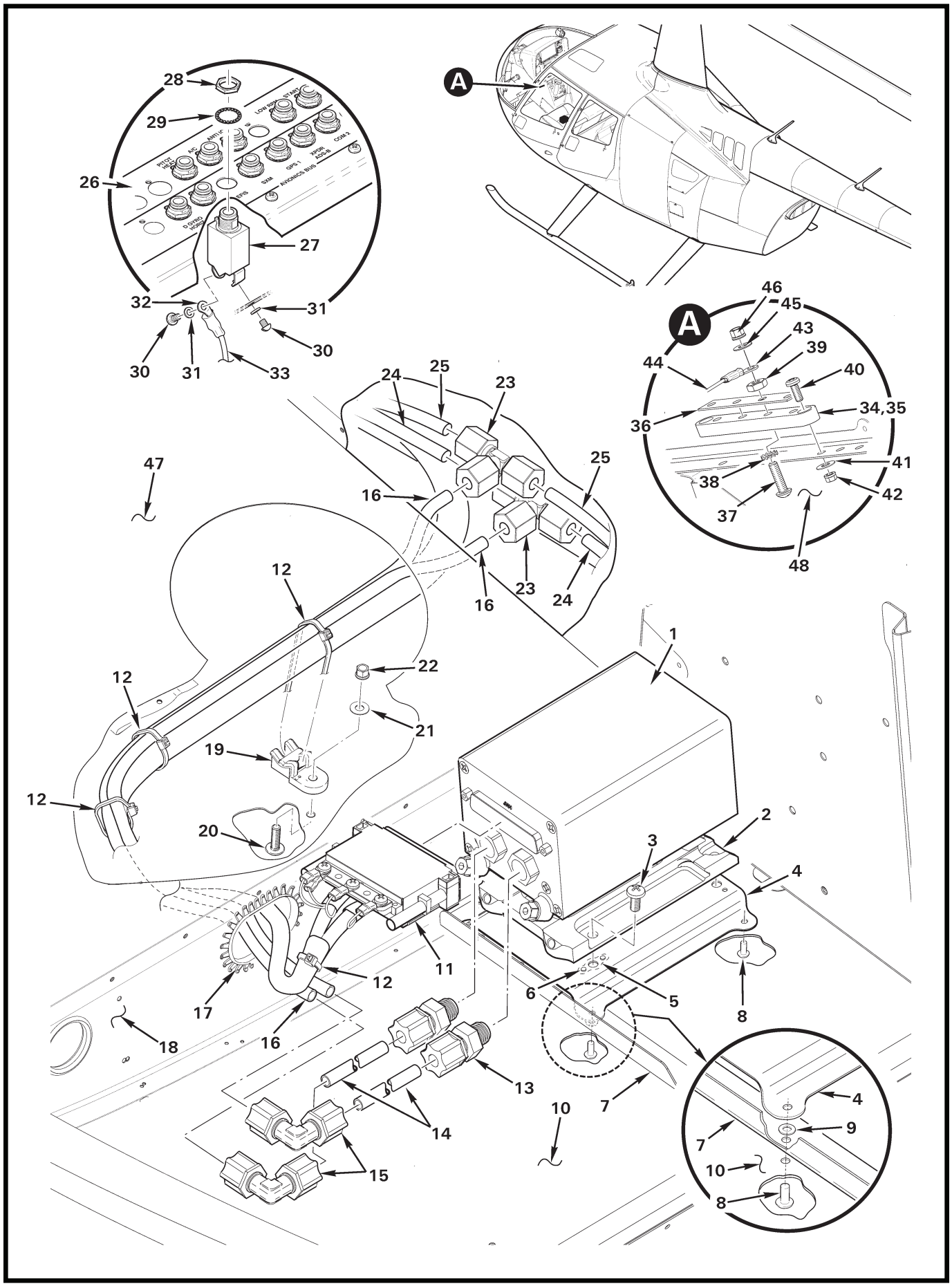
A
28
29
26
27
32
31
30
30
31
33
24
25
23
25
16
23
24
16
47
46
45
43
39
44
40
34,35
36
41
38
42
37
48
12
12
12
22
21
19
20
1
2
3
4
11
12
6
5
8
17
18
16
13
14
15
10
7
4
9
7
10
8

FIGURE AND INDEX NUMBER	PART NUMBER	DESCRIPTION	PARTS AVAIL	QTY PER ASSY
		GARMIN GSU 75H ADAHRS		
97-11B-1	GSU 75H*	ADAHRS Unit (011-03094-00*)	O	1
2	117-00608-00*	Rack (ref)		
3	MS27039C1-06	Screw	X	4
4	F950-9	Support Assembly (incl items 5 and 6)	X	1
5	MS21069L3	Nutplate	X	4
6	NAS1097AD3	Rivet	X	8
7	F950-19	Angle	X	1
8	MS20470AD4	Rivet	X	4
9	NAS620-5	Washer	X	A/R
10	F272-1	Chin (ref)		
11	011-3109-00*	Connector (ref)		
12	MS3367-4-9	Ty-Rap	X	A/R
13	10-4-2-N-O	Fitting	X	2
14	A729-26	Tube	X	2
15	50-4-N-O	Elbow	X	2
16	A729-22	Tube	X	2
17	A225-2	Grommet	X	A/R
18	G230-1	Bulkhead (ref)		
19	D268-1	Support	X	1
20	B526-8	Screw	X	1
21	NAS1149FN816P	Washer	X	1
22	MS21042L08	Nut	X	1
23	70-4-N-O	Tee	X	2
24	A729-6	Tube (Pitot, ref)		
25	A729-11	Tube (Static, ref)		
26	F490	Circuit Breaker Panel (-3 shown; ref)		
27	B297-2	Circuit Breaker (incl items 28 thru 31)	X	1
28	—	Nut	O	1
29	—	Lock Washer	O	1
30	—	Screw	O	2
31	—	Washer	O	2
32	B260-2	Terminal (ref)		
33	-2695	Wire (ref)		
34	C448-2	Block Assembly (incl items 35 thru 39)	X	1
35	C448-5	Block (4 holes)	X	1

NOTES * Garmin part no.

Continues

FIGURE AND INDEX NUMBER	PART NUMBER	DESCRIPTION	PARTS AVAIL	QTY PER ASSY
		GARMIN GSU 75H ADAHRS (Cont'd)		
97-11B-36	A448-10	Bus Bar (4 holes)	X	1
37	B567-43	Screw	X	4
38	91120A130	Washer	X	4
39	B301-8	Nut	X	4
40	MS35206-228	Screw	X	2
41	NAS1149FN616P	Washer	X	2
42	MS21042L06	Nut	X	2
43	B260-3	Terminal (ref)		
44	-2589	Wire (ref)		
45	NAS1149FN816P	Washer	X	1
46	MS21042L08	Nut	X	1
47	F232-1	Floor (ref)		
48	F359-2	Panel (ref)		

NOTES

Intentionally Blank

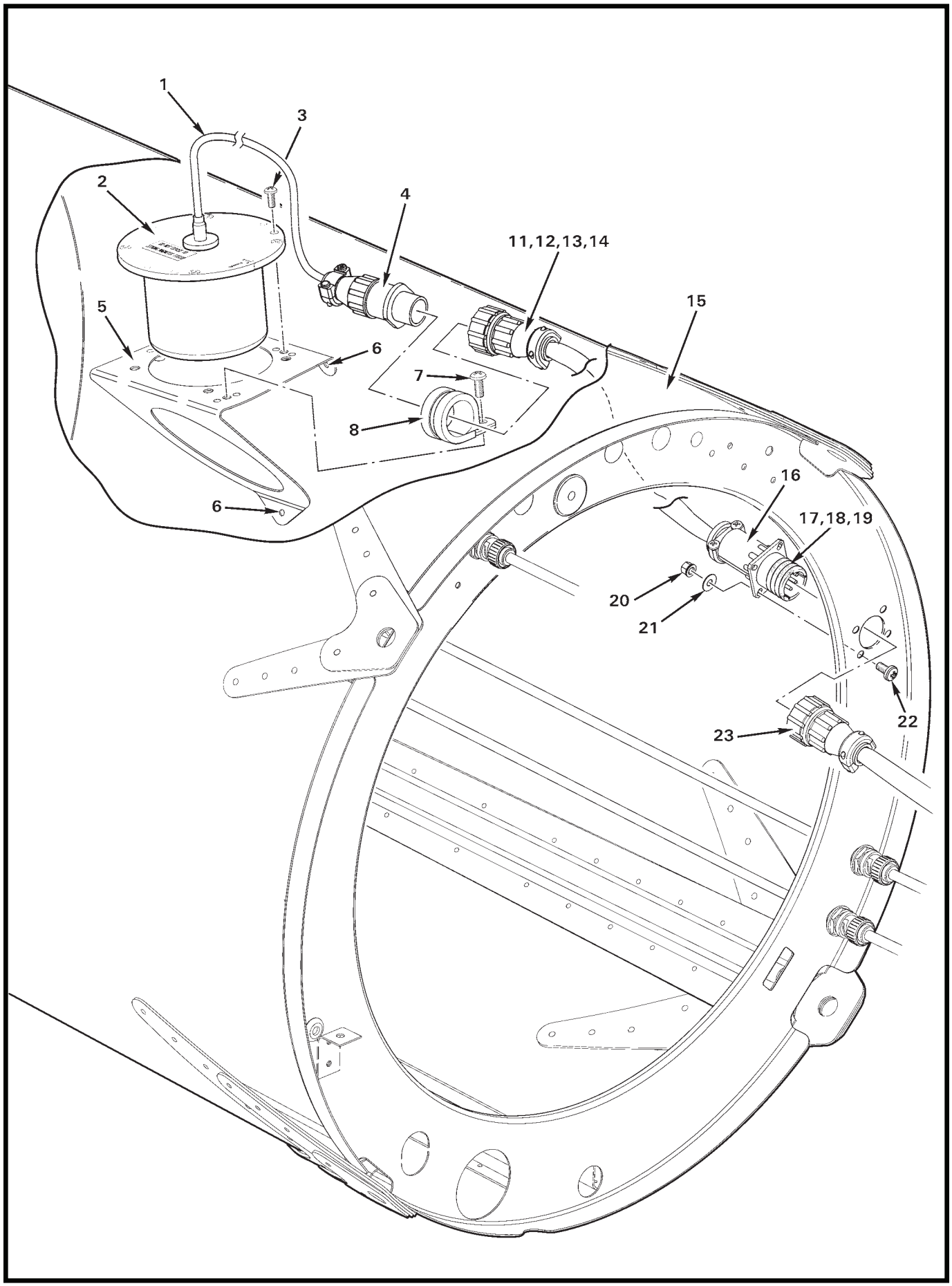
1
2
3
4
5
6
6
7
8
11,12,13,14
15
16
17,18,19
20
21
22
23

FIGURE AND INDEX NUMBER	PART NUMBER	DESCRIPTION	PARTS AVAIL	QTY PER ASSY
		GARMIN G500H EFIS – GMU 44 MAGNETOMETER		
97-13-1	—	Cable (Ref)	O	1
2	GMU 44	Magnetometer (Incl items 1 and 4)	X	1
3	MS27039C0807	Screw	X	3
4	—	Connector (Ref)		
5	F950-4	Bracket Assembly (includes nutplates)	X	1
6	MS20470AD4	Rivet	X	3
7	MS27039C0806	Screw	X	1
8	MS21919WDG12	Clamp	X	1
9	F951-1	Harness Assembly (Incl items 10 thru 14, 16 thru 19, and wires, assembled)	X	1
10	206485-1	Plug	X	1
11	206358-5	Backshell	X	1
12	205090-1	Socket	X	7
13	B267-3	Terminator (not shown)	X	2
14	B158-6	Heat Shrink	X	A/R
15	C023	Tailcone Assembly (Ref)		
16	206358-5	Backshell	X	1
17	205089-1	Pin (not shown)	X	7
18	B267-3	Terminator (not shown)	X	2
19	B158-6	Heat Shrink (not shown)	X	A/R
20	—	Nut (Ref)		
21	—	Washer (Ref)		
22	—	Screw (Ref)		
23	—	Connector (Ref, backshell/socket)		

NOTES

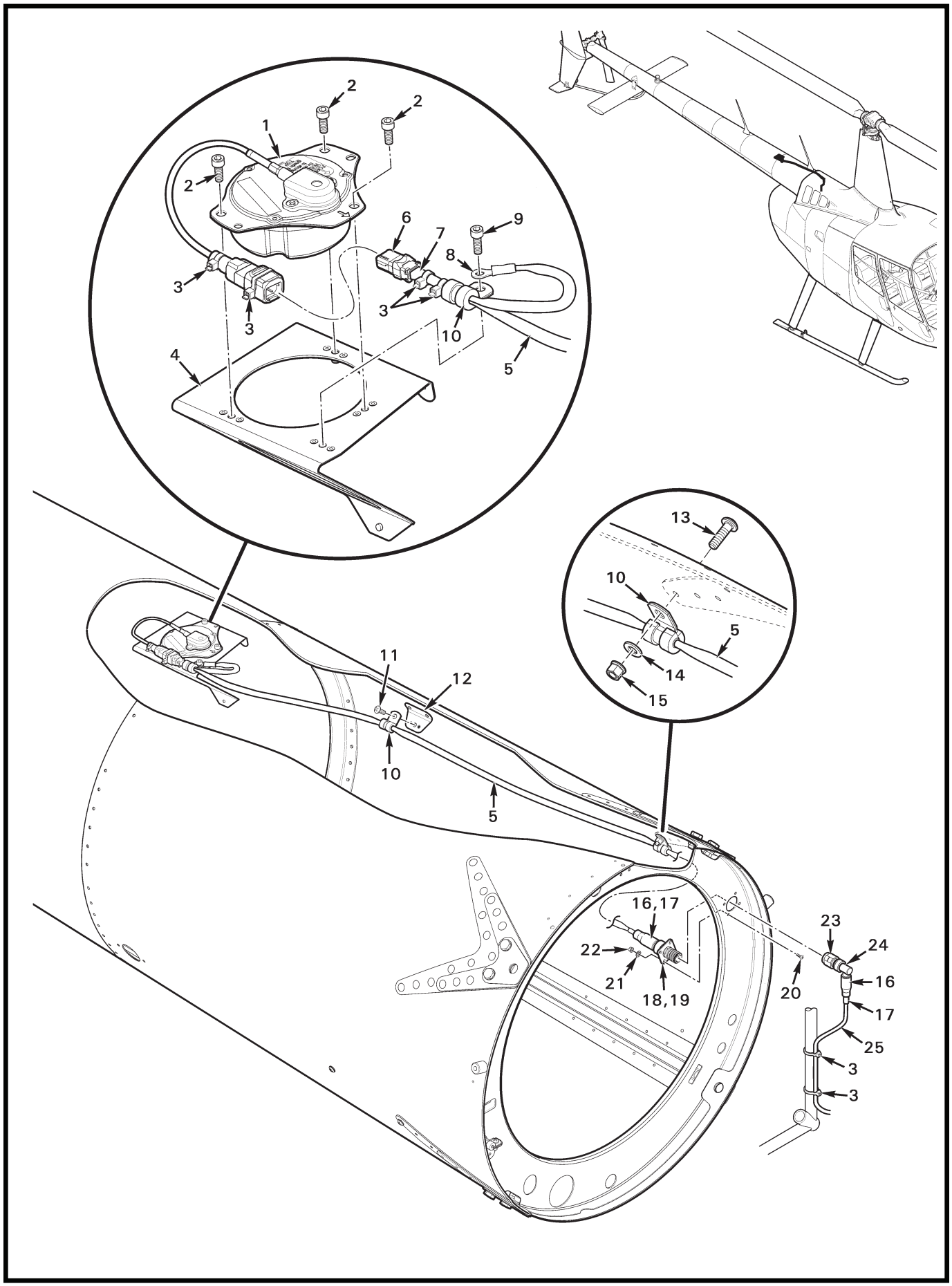
2
2
1
2
6
7
9
8
3
3
3
10
4
5
13
10
5
14
15
11
12
10
5
16,17
23
24
22
21
18,19
20
16
17
25
3
3

FIGURE AND INDEX NUMBER	PART NUMBER	DESCRIPTION	PARTS AVAIL	QTY PER ASSY
		GARMIN GMU 44B MAGNETOMETER		
97-13B-1	GMU 44B*	Magnetometer	O	1
2	NAS1352C06-6	Screw	X	3
3	MS3367-4-9	Ty-Rap	X	A/R
4	F950-20	Bracket Assembly (ref; see Figure 53-17 or 53-21)		
5	F951-5	Harness Assembly (incl items 6, 7, 8, 16 thru 19)	X	1
6	D269-6	Receptacle (incl [6] M39029/57-354 sockets)	X	1
7	D269-22	Backshell	X	1
8	B260-3	Terminal	X	1
9	NAS1352C08-8	Screw	X	1
10	MS21919WDG3	Clamp	X	3
11	MS27039C0806	Screw	X	1
12	F950-15	Angle Assembly (ref; see Figure 53-17 or 53-21)		
13	MS27039C0808	Screw	X	1
14	NAS1149FN816P	Washer	X	1
15	MS21042L08	Nut	X	1
16	202D121-25/225	Boot	X	2
17	B158-6	Heat Shrink	X	A/R
18	D38999/20WA35PN	Receptacle	O	1
19	91H1-09-04-1-B-HE050	Backshell	O	1
20	MS23506-215	Screw	X	4
21	NAS1149FN416P	Washer	X	4
22	MS21042L04	Nut	X	4
23	D38999/26WA35SN	Plug	O	1
24	91H3-09-04-1-B-HE050	Backshell	O	1
25	F951-4	Harness Assembly (with overbraid; incl. items 16, 17, 23 and 24)	X	1
	F951-3	Harness Assembly (without overbraid; incl. items 16, 17, 23 and 24)	X	1

NOTES * Garmin part no.

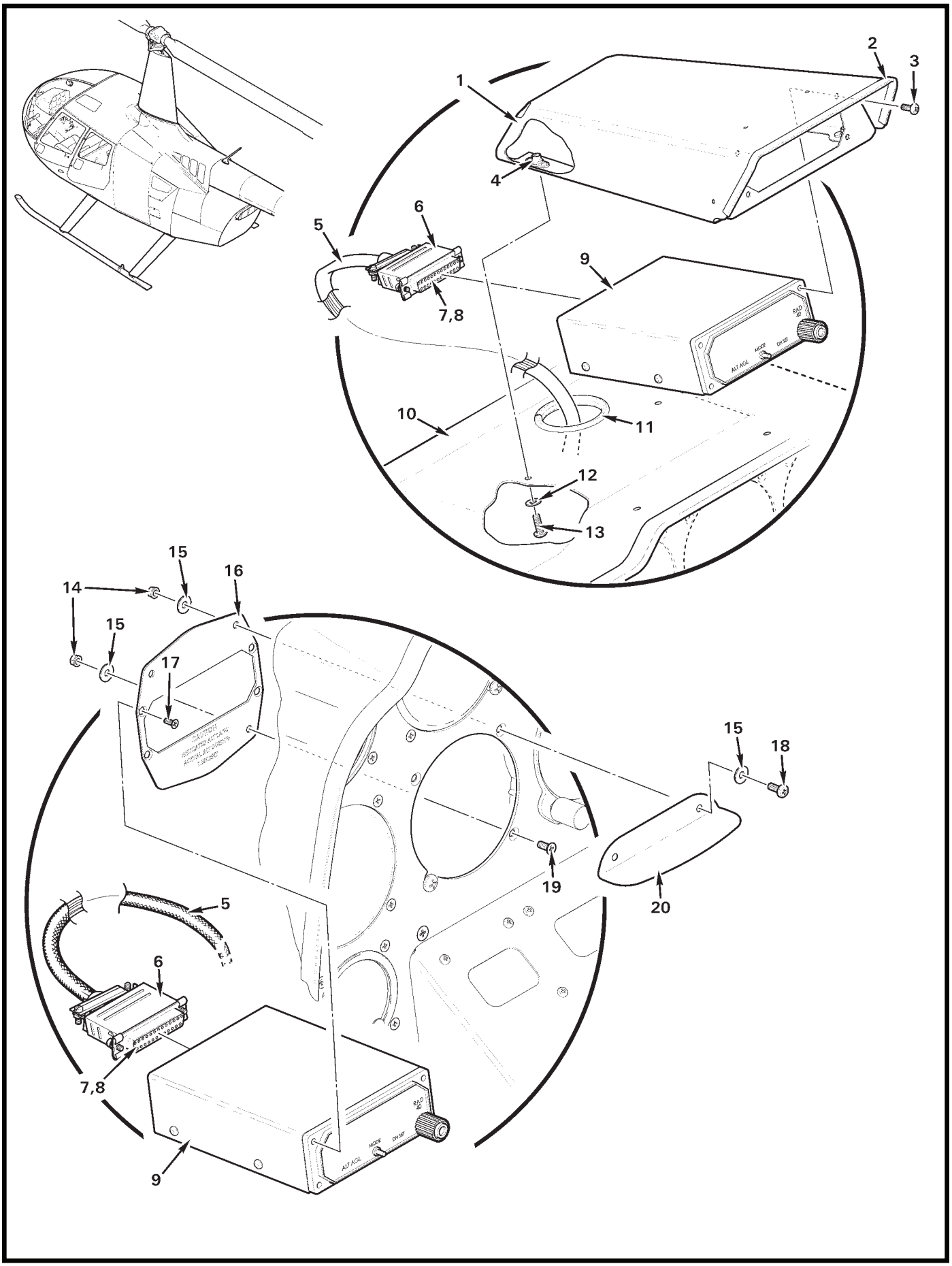
1
2
3
4
5
6
7,8
9
10
11
12
13
14
15
16
17
18
19
20
RAD ALT
ALT AGL
MODE
DH SET

FIGURE AND INDEX NUMBER	PART NUMBER	DESCRIPTION	PARTS AVAIL	QTY PER ASSY
		RADAR ALTIMETER INDICATOR – EIGHT-INSTRUMENT CONSOLE		
97-15-1	B560-4	Enclosure Assembly (Incl items 2 and 4)	X	1
2	A226-15	Trim	X	A/R
3	9-2804-068-10*	Screw	O	4
4	MS21069L08	Nutplate (Ref)		
5	B266-8	Sleeving	X	A/R
6	9-2190-188-20**	Hood	O	1
7	9-2190-188-10**	Connector	O	1
8	B158-2	Heat Shrink (around wires; not shown)	X	A/R
9	RAD-40	Indicator Assembly	X	1
10	G051	Console Assembly (Ref)		
11	NAS557-24A	Grommet	X	1
12	NAS1149FN832P	Washer	X	4
13	MS27039C0807	Screw	X	4
14	MS21042L06	Nut	X	2
15	NAS1149FN632P	Washer	X	5
16	A590-5	Plate	X	1
17	MS24693-S3	Screw	X	4
18	MS35206-229	Screw	X	2
19	MS24693-S26	Screw	X	1
20	B421-3	Visor	X	1

NOTES * Above-console location.
** Free-Flight Systems part no.

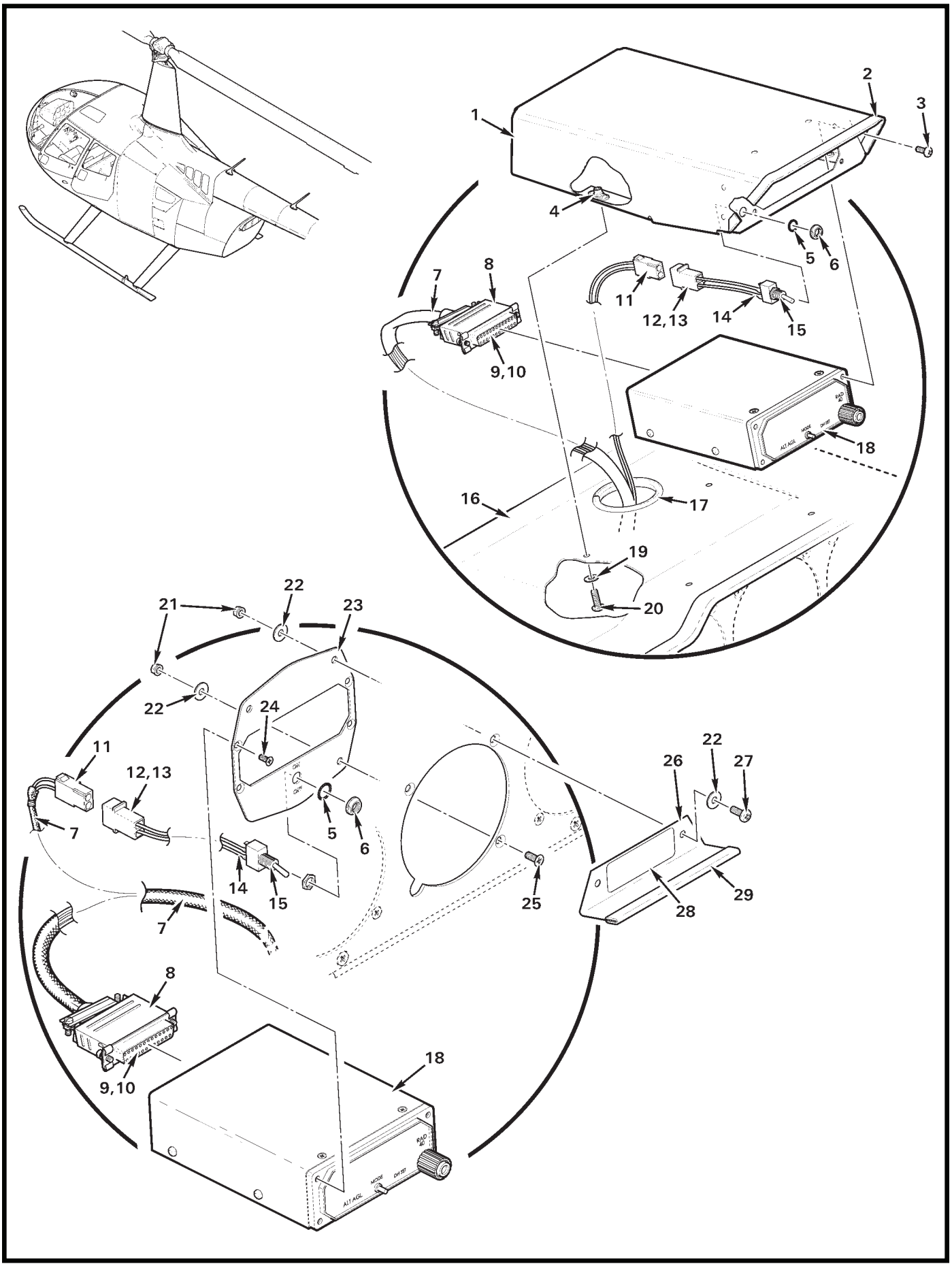

FIGURE 97-17 RADAR ALTIMETER INDICATOR – SEVEN/NINE-INSTRUMENT CONSOLE

FIGURE AND INDEX NUMBER	PART NUMBER	DESCRIPTION	PARTS AVAIL	QTY PER ASSY
		RADAR ALTIMETER INDICATOR – SEVEN/NINE-INSTRUMENT CONSOLE		
97-17-1	B560-1	Enclosure Assembly (Incl items 2 and 4)	X	1
2	A226-15	Trim	X	A/R
3	9-2804-068-10*	Screw	O	4
4	MS21069L08	Nutplate (Ref)		
5	B227-3	Lockwasher	X	1
6	B227-4	Dress Nut	X	1
7	B266-8	Sleeving	X	A/R
8	9-2190-188-20**	Hood	O	1
9	9-2190-188-10**	Connector	O	1
10	B158-2	Heat Shrink (around wires; not shown)	X	A/R
11	B263-13	Housing	X	1
	B263-2	Socket	X	2
12	B049-9	Wire Harness Assembly (Incl items 13 thru 15)	X	1
13	B263-12	Housing	X	1
	B263-1	Pin	X	2
14	B158-1	Heat Shrink	X	A/R
15	B300-1	Switch Assembly (Incl items 5 and 6)	X	1
16	B051	Console Assembly (Ref)		
17	NAS557-24A	Grommet	X	1
18	RAD-40	Indicator Assembly	X	1
19	NAS1149FN832P	Washer	X	4
20	MS27039C0807	Screw	X	4
21	MS21042L06	Nut	X	2
22	NAS1149FN632P	Washer	X	5
23	A590-4	Plate	X	1
24	MS24693-S3	Screw	X	4
25	MS24693-S26	Screw	X	1
26	B421-1	Visor Assembly (Incl items 28 and 29)	X	1
27	MS35206-229	Screw	X	2
28	C654-46	Decal	X	1
29	A226-9	Trim	X	A/R

NOTES * Above-console location.
** Free-Flight Systems part no.

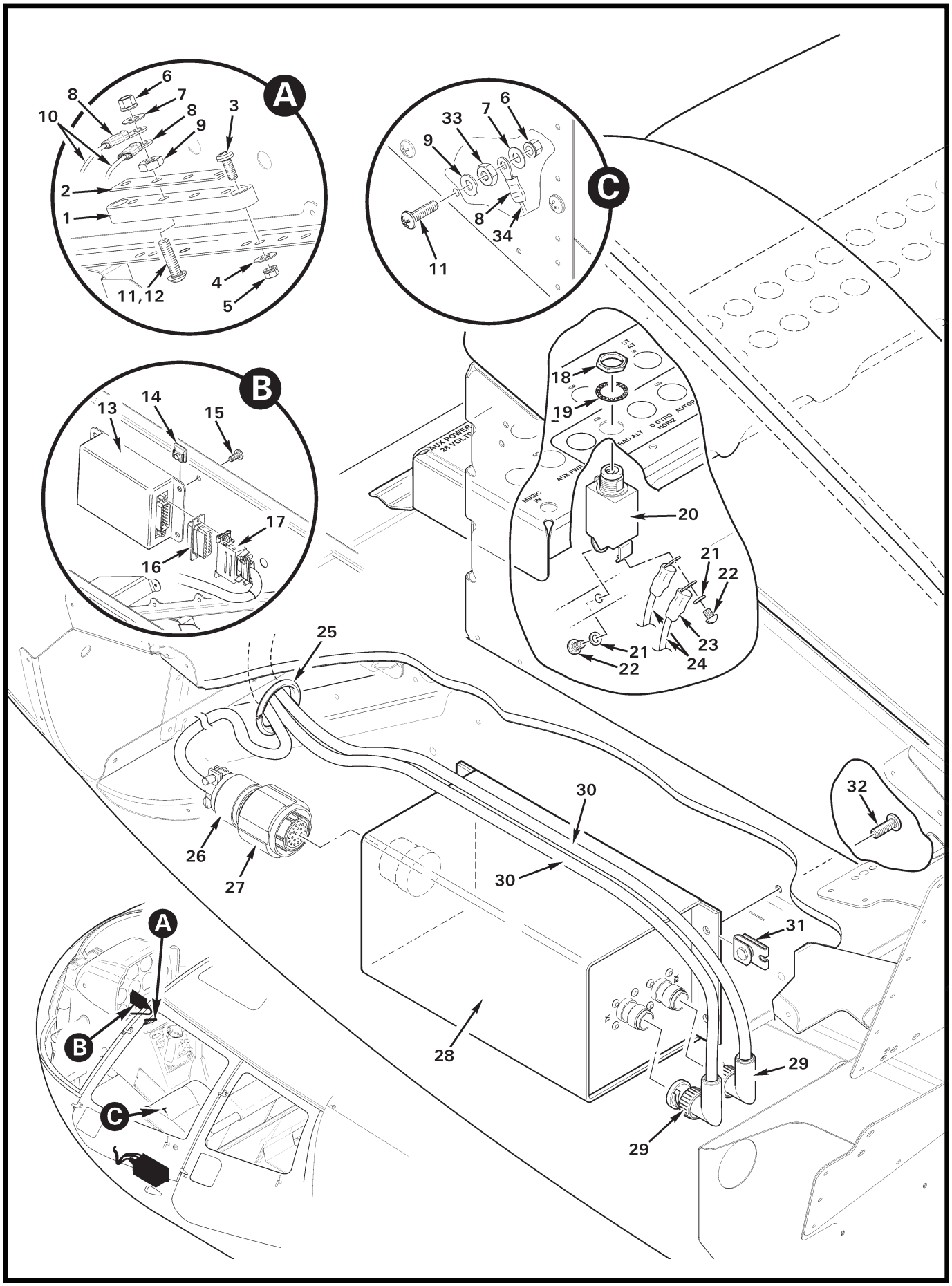
A
6
8
7
8
10
9
3
2
1
11,12
4
5
C
33
7
6
9
8
34
11
B
13
14
15
17
16
AUX POWER 28 VOLTS
18
19
RAD ALT
D GYRO HORIZ
AUTOP
AUX PWR
MUSIC IN
20
21
22
23
24
21
22
25
26
27
30
30
32
31
28
29
29
A
B
C

FIGURE AND INDEX NUMBER	PART NUMBER	DESCRIPTION	PARTS AVAIL	QTY PER ASSY
		FREEFLIGHT RA4000/4500 RADAR ALTIMETER INSTALLATION*		
97-19-1	C448-2	Terminal Block Assembly (includes C448-5 block, and items 2, 9, 11, and 12)	X	1
	C448-5	Block (ref)		
2	A448-10	Bus Bar	X	1
3	MS35206-228	Screw	X	2
4	NAS1149FN616P	Washer	X	2
5	MS21042L06	Nut	X	2
6	MS21042L08	Nut	X	4
7	NAS1149FN816P	Washer	X	4
8	B260-3	Terminal	X	A/R
9	B301-8	Nut	X	4
10	-1331, -2438	Wire (ref)		
11	B567-43	Screw (install using item 12 under head)	X	4
12	B270-9	Adhesive	X	A/R
13	85601-00	Tone Generator (ATG-410)	X	1
14	B162-2	Clipnut	X	4
15	MS27039C0805	Screw	X	4
16	B269-8	Receptacle	X	1
17	B269-22	Backshell	X	1
18	—	Nut	X	1
19	—	Lockwasher	X	1
20	B297-2	Circuit Breaker (2 amp; includes items 18, 19, 21 and 22)	X	1
21	—	Washer	X	1
22	—	Screw	X	2
23	B260-2	Terminal	X	2
24	-1558, -2727	Wire (ref)		
25	NAS557-14A	Grommet	X	1
26	M85049/38-13N	Backshell	X	1
27	D38999/26FC35SN	Plug (TSV06RF-13-35S)	X	1
28	RA-4500	Radar Altimeter	X	1
29	5225554-6	Plug (90° TNC)	X	2
30	—	Antenna Cable (ref)		
31	B162-3	Clipnut	X	4
32	MS27039C0807	Screw	X	4
33	NAS1149DN832H	Washer	X	1
34	-2728	Wire (ref, ground for item 28)		

NOTES * See Figure 6-41 for Radar Altimeter Antenna Installation (FreeFlight RA4000/4500).

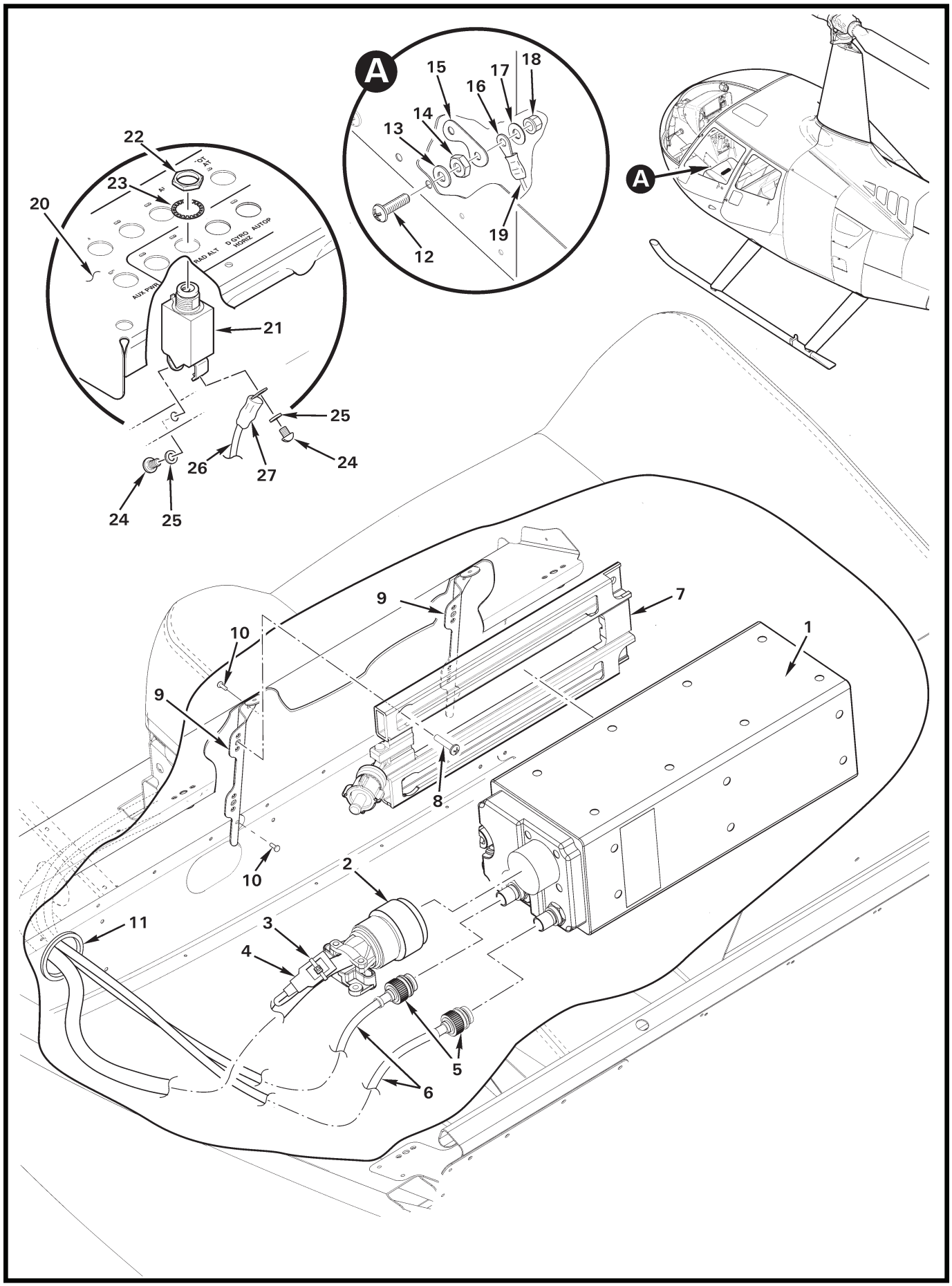
A
15
17
18
16
14
13
12
19
A
22
23
20
RAD ALT
D GYRO
HORIZ
AUTOP
AUX PWR
21
25
26
27
24
24
25
9
7
10
1
9
8
10
2
11
3
4
5
6

FIGURE AND INDEX NUMBER	PART NUMBER	DESCRIPTION	PARTS AVAIL	QTY PER ASSY
		GARMIN GRA 55 RADAR ALTIMETER INSTALLATION*		
97-19B-1	GRA 55**	Radar Altimeter (010-00946-05**)	O	1
2	D38999/26ME35SA	Plug	O	1
3	MS3367-4-9	Ty-Rap	X	A/R
4	011-0258-00**	Config Module	O	1
5	D261-121	Plug	X	2
6	B274-518*	Cable (Antenna Coax; ref)		
7	011-02567-00**	Mounting Rack	O	1
8	MS27039C0807	Screw	X	4
9	F950-22	Mount Assembly	O	2
10	MS20470AD4	Rivet	X	6
11	NAS557-16A	Grommet	X	1
12	B576-43	Screw	X	2
13	NAS1149DN832H	Washer	X	2
14	B301-8	Nut	X	2
15	A448-3	Bus Bar	X	1
16	B260-3	Terminal	X	1
17	NAS1149FN816P	Washer	X	2
18	MS21042L08	Nut	X	2
19	-2728	Wire (ref)		
20	F490	Circuit Breaker Panel (-3 shown; ref)		
21	B297-2	Circuit Breaker (2 amp; includes items 22 thru 25)	X	1
22	—	Nut	O	1
23	—	Lockwasher	O	1
24	—	Screw	O	2
25	—	Washer	O	2
26	-2727	Wire (ref)		
27	B260-2	Terminal	X	1

NOTES * See Figure 6-41B for Radar Altimeter Antenna Installation (Garmin GRA 55).
** Garmin part no.

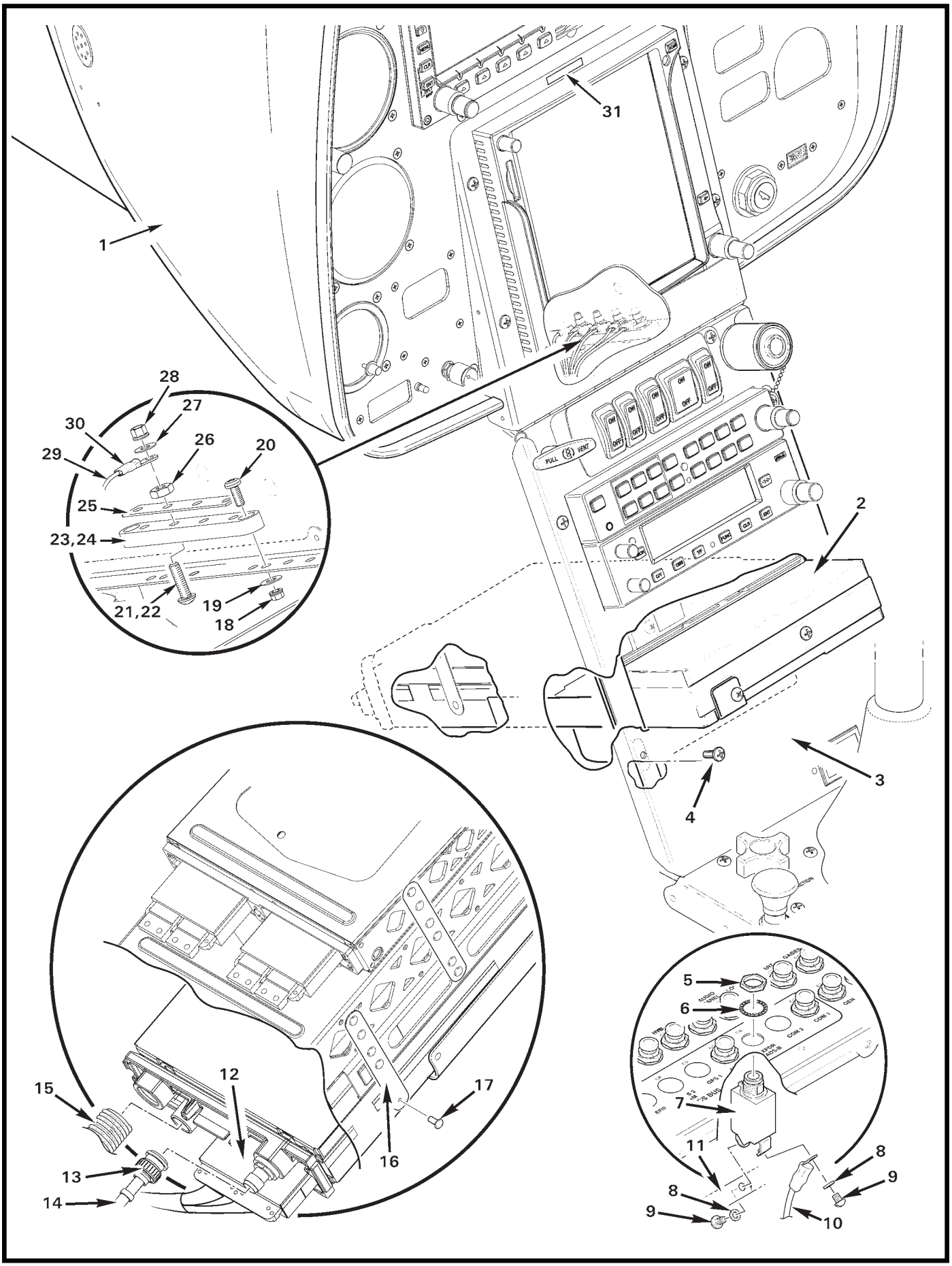
31
1
28
27
30
26
20
29
25
23,24
21,22
19
18
2
3
4
5
6
7
8
9
10
11
12
13
14
15
16
17
PULL
VENT
ON
OFF
FUNC
CH
ENT
CAN
TIME
AUDIO
MIC
XPDR
CAN/DME
VHF
GPS 1
COM 2
COM 1
GEN
MAIN
AUDIO
EMER
CB / 28 BUS

FIGURE AND INDEX NUMBER	PART NUMBER	DESCRIPTION	PARTS AVAIL	QTY PER ASSY
		GARMIN GTX 33 TRANSPONDER INSTALLATION		
97-21-1	G060	Console Assembly (Ref)		
2	GTX 33*	Transponder (Incl item 12)	X	1
3	F640	Face Assembly (Ref)		
4	MS27039C0807	Screw	X	5
5	—	Nut	O	2
6	—	Lockwasher	O	2
7	B297-5	Circuit Breaker (5 amp; includes 5, 6, 8 and 9)	X	1
8	—	Washer	O	1
9	—	Screw	O	2
10	-263	Wire (Ref; power to transponder)		
11	A448	Bus Bar (Ref)		
12	011-00582-00	Installation Kit	O	1
13	225973	90° BNC (Ref)		
14	F850-452	Antenna Cable (Ref)		
15	5399K17	Hose (Ref)		
16	A684-1	Strap	X	2
17	NAS1097AD3	Rivet	X	8
18	MS21042L06	Nut	X	2
19	NAS620-6	Washer	X	2
20	MS35206-228	Screw	X	2
21	B567-43	Screw (install using item 22 under head)	X	4
22	B270-9	Adhesive	X	A/R
23	C448-2	Block Assembly (Incl items 21, 22, and 24 thru 26)	X	1
24	C448-5	Block (Ref)		
25	A448-10	Bus Bar	X	1
26	B301-8	Nut	X	4
27	NAS1149FN816P	Washer	X	4
28	MS21042L08	Nut	X	4
29	-260	Wire (Ref)		
30	B260-3	Terminal	X	A/R
31	F654-37	Decal – “ADS-B OUT INSTALLED” (installed below GTN unit)	X	1

NOTES * Garmin part no.

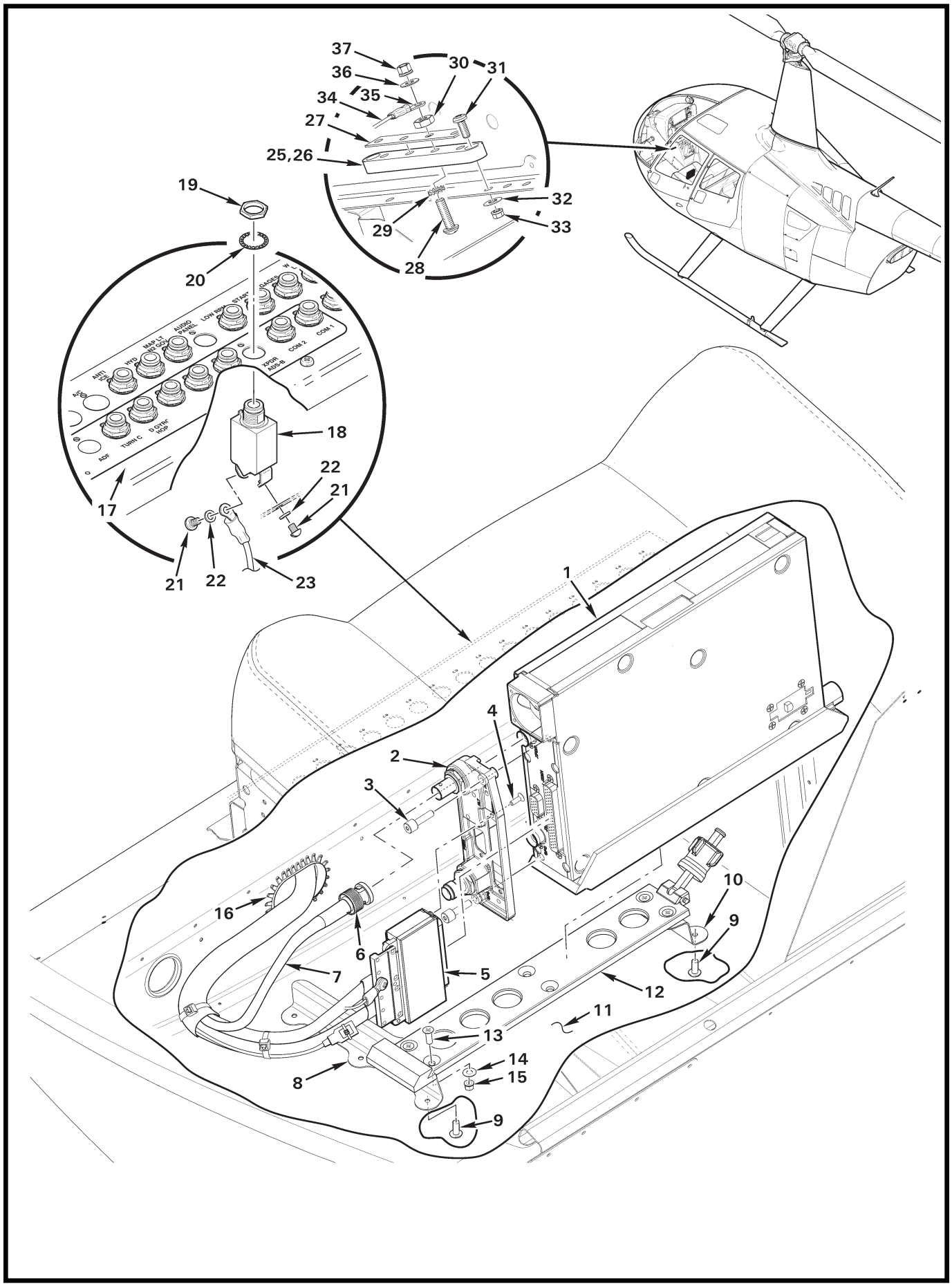
37
36
35
34
27
25,26
30
31
32
33
29
28
19
20
18
17
22
21
21
22
23
1
4
2
3
10
9
16
6
7
5
12
11
13
14
15
8
9
AUDIO PANEL
COM 1
COM 2
ADF
TURN C

FIGURE AND INDEX NUMBER	PART NUMBER	DESCRIPTION	PARTS AVAIL	QTY PER ASSY
		GARMIN GTX 345R TRANSPONDER INSTALLATION*		
97-21B-1	GTX 345R**	Transponder Assembly (011-03303-00** or 011-03303-01**; includes items 2 thru 5)	O	1
2	—	Backplate (ref)		
3	—	Screw (ref)		
4	—	Screw (ref)		
5	—	Harness Connector (ref)		
6	D261-101	Plug (BNC; alternate part number 5225395-6)	X	1
7	B274-518	Cable (Antenna Coax)	X	A/R
8	C904-7	Support	X	1
9	MS20470AD4	Rivet	X	5
10	C904-6	Support	X	1
11	F272-1	Chin (ref)		
12	011-03762-00*	Mount (ref)		
13	MS24694-S4	Screw	X	4
14	NAS1149FN816P	Washer	X	4
15	MS21042L08	Nut	X	4
16	A225-2	Grommet	X	A/R
17	F490	Circuit Breaker Panel (-3 shown; ref)		
18	B297-3	Circuit Breaker (3 amp; includes items 19 thru 22)	X	1
19	—	Nut	O	1
20	—	Lockwasher	O	1
21	—	Screw	O	2
22	—	Washer	O	2
23	F859-263	Wire (ref)		
24	B260-2	Terminal (ref)		
25	C448-2	Block Assembly (includes items 26 thru 30)	X	1
26	C448-5	Block	X	1
27	A448-10	Bus Bar	X	1
28	B567-43	Screw	X	4
29	91120A130	Washer	X	4
30	B301-8	Nut	X	4
31	MS35206-228	Screw	X	2
32	NAS1149FN616P	Washer	X	2
33	MS21042L06	Nut	X	2
34	-260	Wire (ref)		

NOTES * See Figure 6-19 for Transponder Antenna Installation.

** Garmin part no.

Continues

FIGURE AND INDEX NUMBER	PART NUMBER	DESCRIPTION	PARTS AVAIL	QTY PER ASSY
		GARMIN GTX 345R TRANSPONDER INSTALLATION (Cont'd)		
97-21B-35	B260-3	Terminal (ref)		
36	NAS1149FN816P	Washer	X	1
37	MS21042L08	Nut	X	1

NOTES

Intentionally Blank

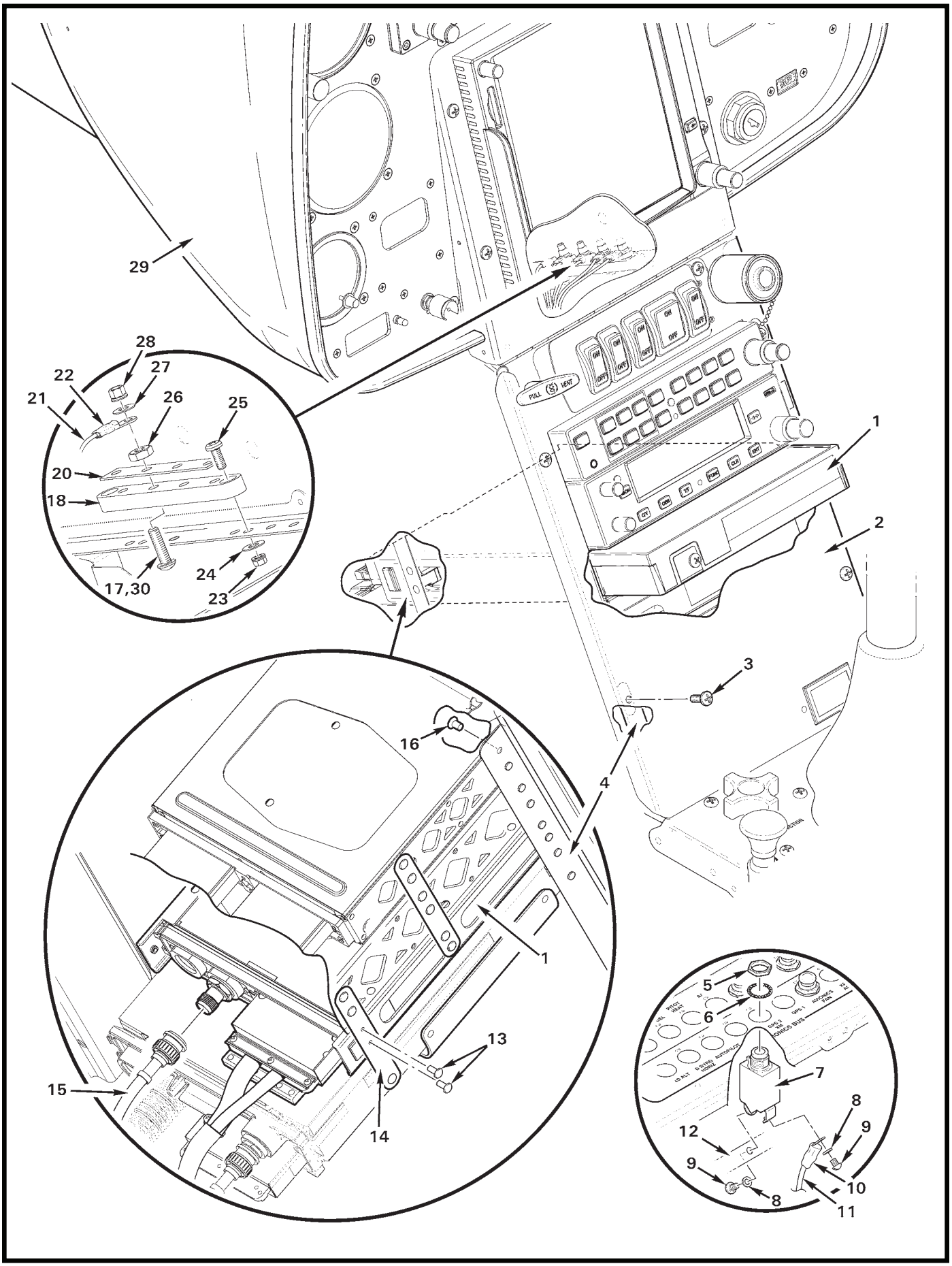

FIGURE 97-23 GARMIN GDL 69A XM RECEIVER INSTALLATION

FIGURE AND INDEX NUMBER	PART NUMBER	DESCRIPTION	PARTS AVAIL	QTY PER ASSY
		GARMIN GDL 69A XM RECEIVER INSTALLATION		
97-23-1	GDL 69A	XM Radio Receiver	X	1
2	F640	Face Assembly (Ref)		
3	MS27039C0807	Screw	X	5
4	C905	Angles (Ref)		
5	—	Nut	O	1
6	—	Lockwasher	O	1
7	B297-5	Circuit Breaker (5 amp; includes items 5, 6, 8, and 9)	X	1
8	—	Washer	O	1
9	—	Screw	O	1
10	B260-2	Terminal	X	1
11	-2586	Wire (Ref, XM Receiver)		
12	A448	Bus Bar (Ref)		
13	NAS1097AD3	Rivet	X	A/R
14	A648-1	Strap	X	2
15	F850	Antenna Cable (Ref)		
16	MS20426AD4	Rivet	X	4
17	B567-43	Screw (install using item 30 under head)	X	4
18	C448-2	Block Assembly	X	1
19	C448-5	Block (Ref)		
20	A448-10	Bus Bar	X	1
21	-2694	Wire (Ref, XM Receiver ground)		
22	B260-3	Terminal	X	A/R
23	MS21042L06	Nut	X	2
24	NAS620-6	Washer	X	2
25	MS35206-228	Screw	X	2
26	B301-8	Nut	X	4
27	NAS1149FN816P	Washer	X	4
28	MS21042L08	Nut	X	4
29	G060	Console Assembly (Ref)		
30	B270-9	Adhesive	X	A/R

NOTES

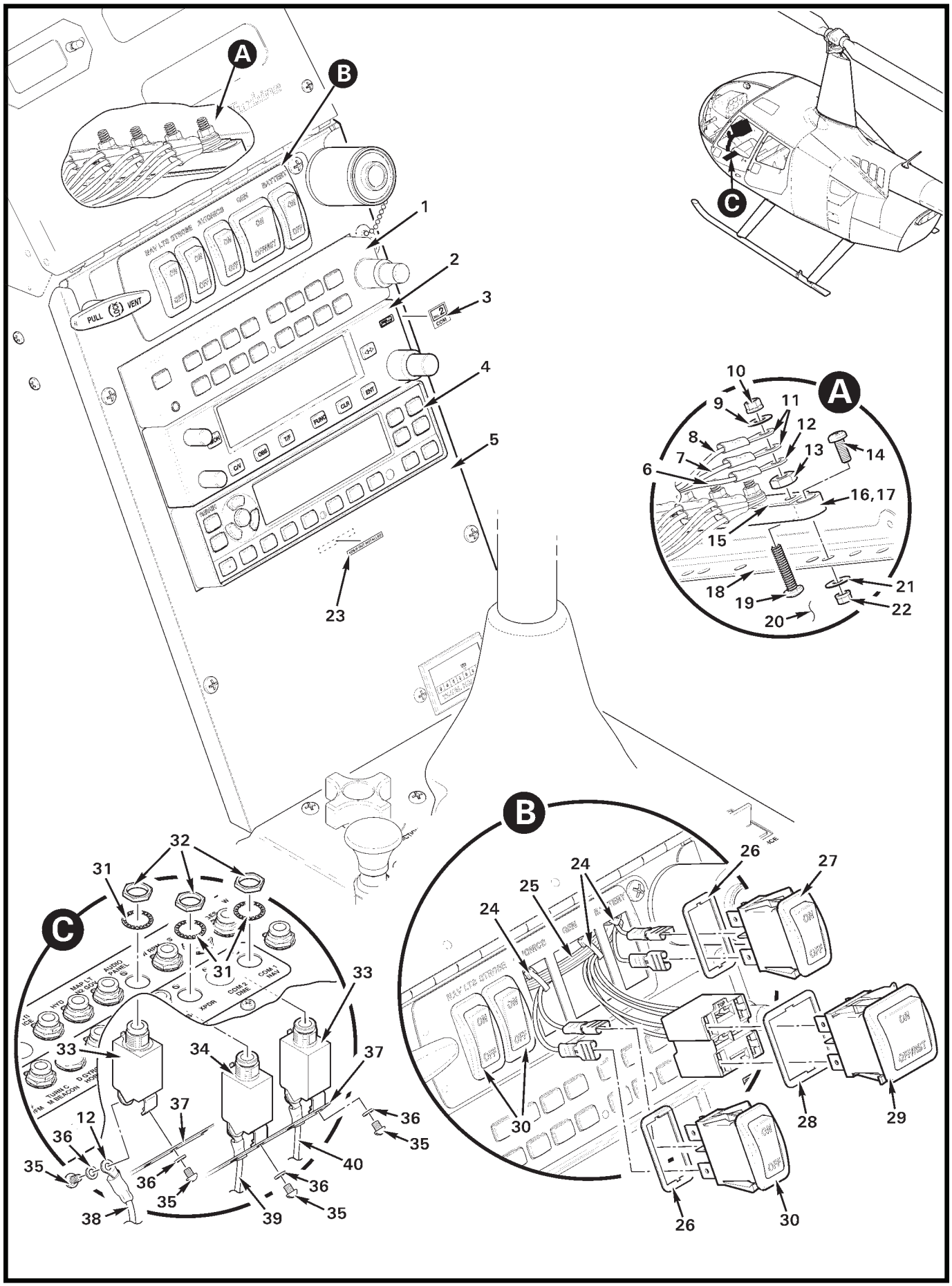

FIGURE 97-25 AVIONICS PANEL SWITCHES AND GARMIN GTR 225B COM RADIO INSTALLATION

FIGURE AND INDEX NUMBER	PART NUMBER	DESCRIPTION	PARTS AVAIL	QTY PER ASSY
		AVIONICS PANEL SWITCHES AND GARMIN GTR 225B COM RADIO INSTALLATION		
97-25-1	GMA 350Hc	Audio Control	X	1
2	GTR 225B*	Transceiver (VHF COM)	X	1
3	F654-38	Decal – "No. 1 COM, No. 2 COM, or No. 3 COM"	X	A/R
4	GTX 325	Transponder (Mode C; see also Figure 97-29, and 97-57)	X	1
	GTX 335	Transponder (Mode S and ASD-B Out; see also Figure 97-29, and 97-57)	X	1
	GTX 345	Transponder (Mode S and ASD-B In/Out; see also Figure 97-29, and 97-57)	X	1
5	G255	Panel – Avionics (Ref)		
6	F859-643	Wire (Ref; ground)		
7	C802-201	Wire (Ref; ground)		
8	-260	Wire (Ref; ground)		
9	NAS1149FN816P	Washer	X	4
10	MS21042L08	Nut	X	4
11	B260-3	Terminal	X	2
12	B260-9	Terminal	X	1
13	B301-8	Nut	X	1
14	MS35206-228	Screw	X	2
15	A448-10	Bus Bar (3 holes)	X	1
16	C448-5	Block	X	1
17	C448-2	Block Assembly (includes items 13,15, 16, & 19)	X	1
18	F365-1	Angle (Ref)		
19	B567-43	Screw	X	4
20	F359-2	Panel (Ref)		
21	NAS1149FN616P	Washer	X	1
22	MS21042L06	Nut	X	1
23	F654-37	Decal – "ADS-B OUT INSTALLED" (Incl with GTX 335 or GTX 345	X	1
24	MS3367-4-9	Ty-rap (Ref)		
25	D049-7	Harness Assembly (Ref)		
26	G184-5	Gasket	X	4
27	G184-2	Switch – Battery	X	1
28	G184-6	Gasket	X	1
29	G184-3	Switch	X	1
30	G184-1	Switch	X	3
31	—	Lockwasher	O	1

NOTES * Garmin part no.

FIGURE AND INDEX NUMBER	PART NUMBER	DESCRIPTION	PARTS AVAIL	QTY PER ASSY
		GARMIN GTR 225B COM RADIO INSTALLATION		
97-25-32	—	Nut	O	1
33	B297-5	Circuit Breaker (5 amp, includes items 31, 32, 35 and 36)	X	2
34	B297-3	Circuit Breaker (3 amp, includes items 31, 32, 35, & 36)	X	1
35	—	Screw	O	1
36	—	Washer	O	1
37	A448	Bus Bar (Ref)		
38	F859-644	Wire – Audio (Ref)		
39	F859-263	Wire – Transponder (Ref)		
40	F859-200	Wire – COM 1 (Ref)		

NOTES * Garmin part no.

Intentionally Blank

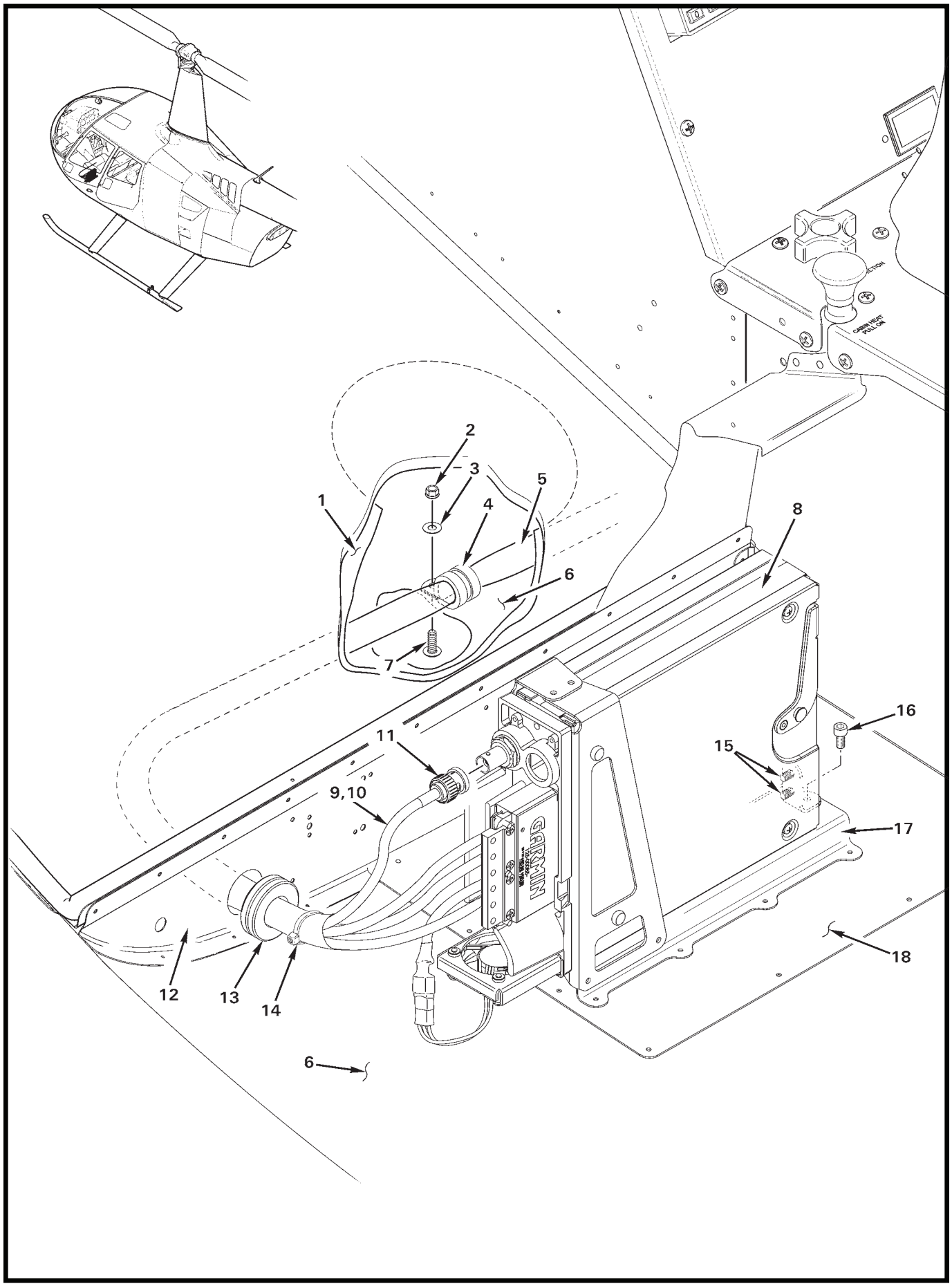
1
2
3
4
5
6
7
8
9,10
11
12
13
14
15
16
17
18
6
CABIN HEAT PULL ON
GARMIN

FIGURE AND INDEX NUMBER	PART NUMBER	DESCRIPTION	PARTS AVAIL	QTY PER ASSY
		GARMIN GDL 88 RECEIVER (ADS-B) INSTALLATION		
97-29-1	F232-1	Panel (Ref, shown with carpet)		
2	MS21042L08	Nut	X	1
3	NAS1149FN816P	Washer	X	1
4	MS21919WDG8	Clamp	X	1
5	B161-8	Spirap	X	A/R
6	F272-1	Chin (Ref)		
7	AN526C832R8	Screw	X	1
8	GDL 88*	Receiver (ADS-B)	X	1
9	F850-452	Cable (Ref)		
10	B161-4	Spirap	X	A/R
11	225395-6	Plug (BNC)	X	2
12	G230-1	Bulkhead (Ref)		
13	MS35489-19	Grommet	X	1
14	MS3367-4-9	Ty-rap (or MS3367-5-9)	X	1
15	—	Screw (supplied with item 8)	O	2
16	NAS1352-08-6P	Screw	X	1
17	C904-1	Mount Assembly (Ref)		
18	G130-1	Doubler (Ref)		

NOTES * Garmin part no.

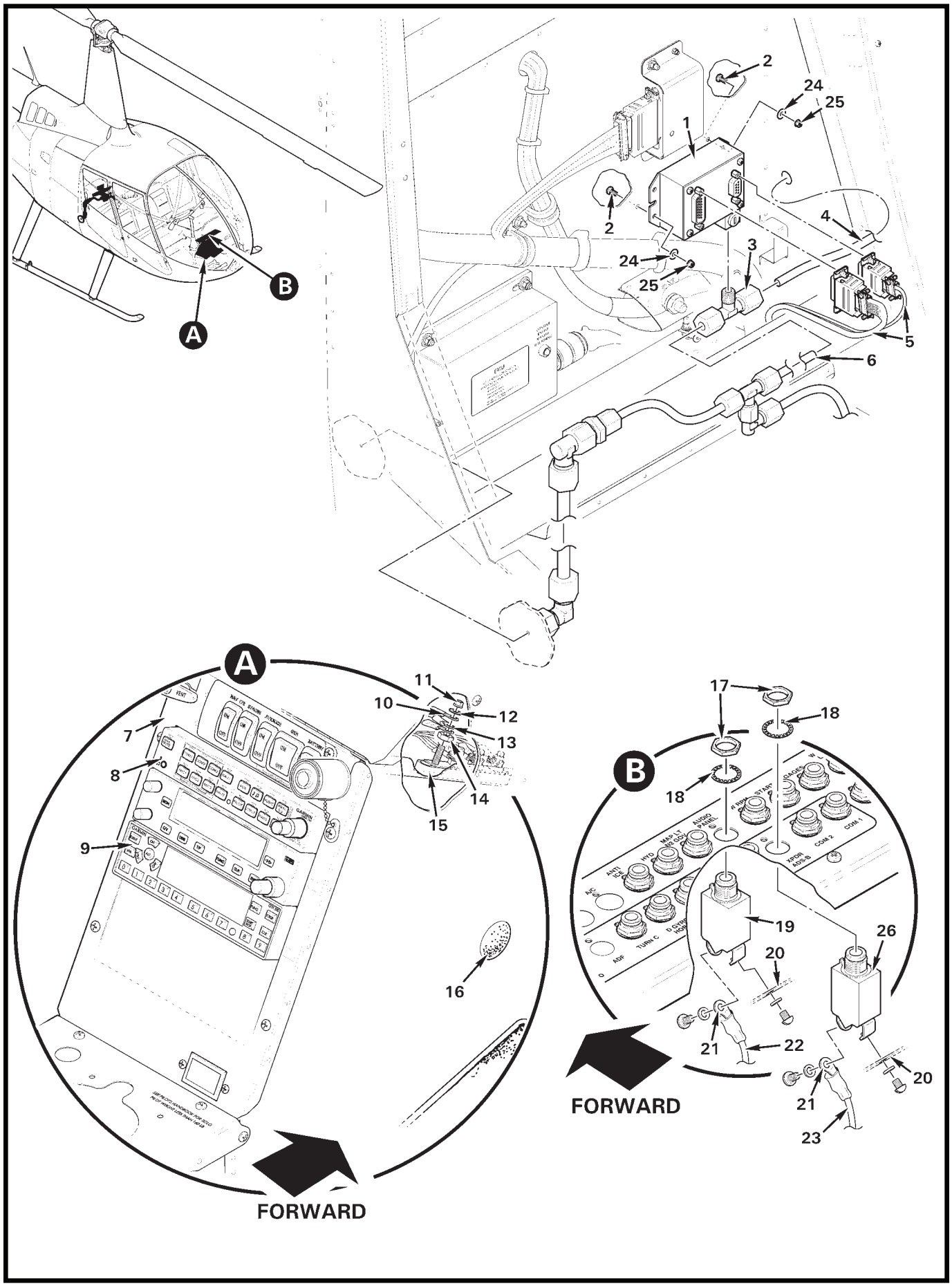

FIGURE 97-31 GARMIN GTX 3XX TRANSPONDER AND BLIND ENCODER INSTALLATION

FIGURE AND INDEX NUMBER	PART NUMBER	DESCRIPTION	PARTS AVAIL	QTY PER ASSY
		GARMIN GTX 3XX TRANSPONDER AND BLIND ENCODER INSTALLATION		
97-31-1	B240-3	Blind Encoder	X	1
2	MS35206-227	Screw	X	2
3	70-4-N-0	Tee	X	1
4	A729-24	Tube (Ref)		
5	F859-01	Wire Harness (Ref, 8-hole console)		
	F059-01	Wire Harness (Ref, 7-, and 9-hole console; earlier ships)		
6	A729-53	Tube (Ref)		
7	F640	Panel – Avionics (Ref)		
8	GMA350HC*	Audio Control	X	1
9	GTX 325*	Transponder (Mode C)	X	1
	GTX 335*	Transponder (Mode S and ADS-B Out)	X	1
	GTX 345*	Transponder (Mode S and ADS-B In/Out)	X	1
	GTX 330*	Transponder (earlier ships; Mode S w/ADS-B Out & TIS-A)	O	1
10	-260	Wire (Ref; transponder ground)		
11	MS21042L08	Nut	X	A/R
12	NAS1149FN816P	Washer	X	A/R
13	F859-643	Wire (Ref; audio control ground)		
14	B301-8	Nut (Ref)		
15	C448-2	Block Assembly	X	1
16	SI413	Hole Plug	X	2
17	—	Nut	O	2
18	—	Lockwasher	O	2
19	B297-5	Circuit Breaker (5 amp; includes items 17 and 18)	X	2
20	A448	Bus Bar (Ref; -1, -4, -9, -10, -14, -22 as required)		
21	B260-2	Terminal (Ref)		
22	F859-644	Wire (Ref; audio panel power)		
23	F859-263	Wire (Ref; transponder power)		
24	NAS1149FN616P	Washer	X	2
25	MS21042L06	Nut	X	2
26	B297-3	Circuit Breaker (3 amp; includes items 17 and 18)	X	2

NOTES * Garmin part no.

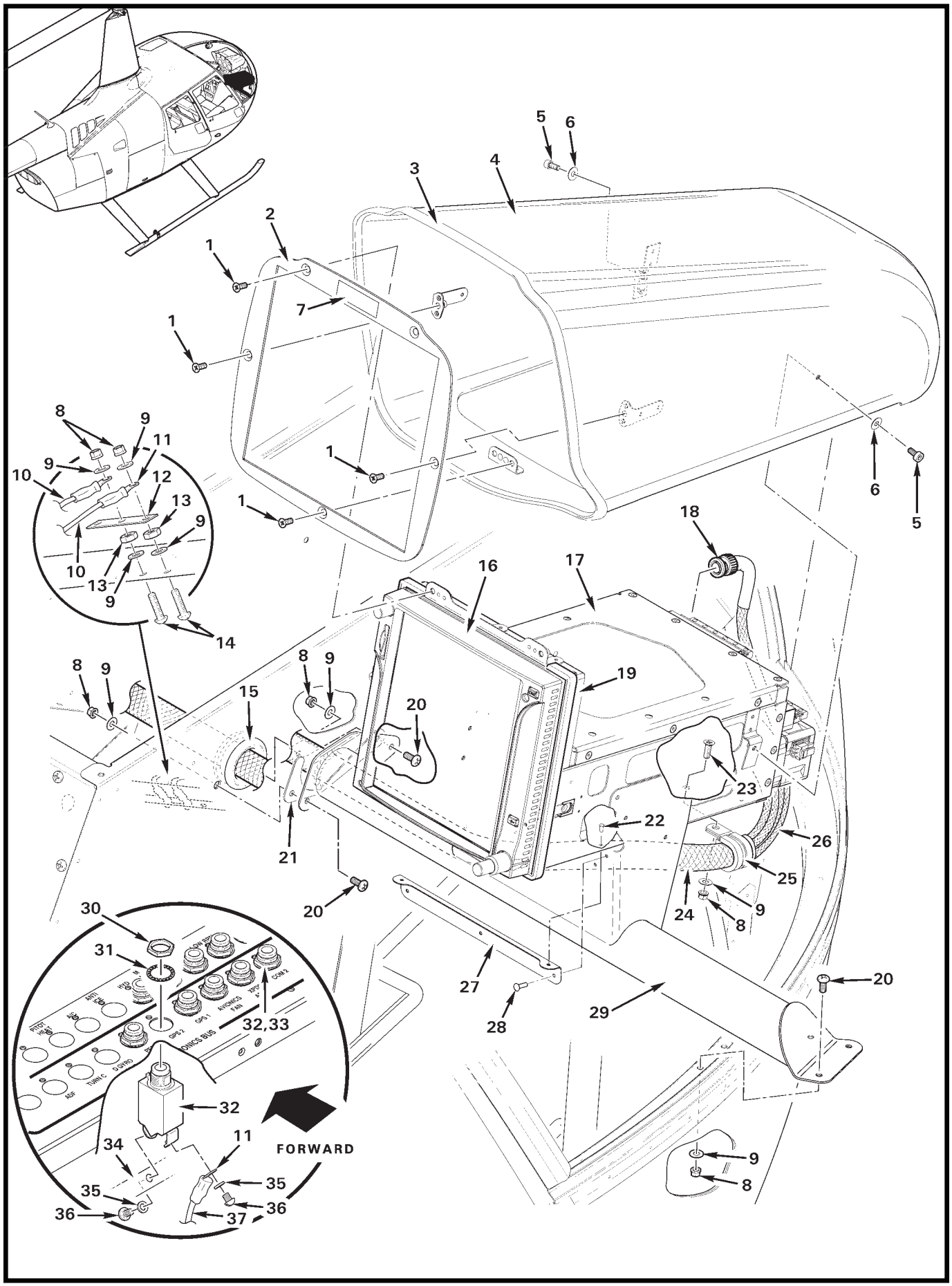
5
6
3
4
2
1
7
1
8
9
11
10
9
12
13
9
1
1
6
5
18
16
17
10
13
9
14
8
9
8
9
19
15
20
23
22
26
21
25
20
24
9
8
30
31
27
20
29
28
32,33
32
11
FORWARD
34
35
35
36
36
37
9
8

FIGURE AND INDEX NUMBER	PART NUMBER	DESCRIPTION	PARTS AVAIL	QTY PER ASSY
		PILOT'S SIDE CONSOLE – GARMIN GTN 700-SERIES GPS		
97-33-1	MS24694-S4	Screw	X	4
2	G704-6	Faceplate	X	1
3	A226-11	Trim (install with retaining rib on inside)	X	A/R
4	G704-2	Shell Assembly (Incl item 3)	O	1
5	92196A145	Screw	X	2
6	NAS1149FN616P	Washer	X	2
7	F654-40	Decal – "No. 1, No. 2, No. 3, GPS/NAV/COM"	X	A/R
8	MS21042L08	Nut	X	7
9	NAS1149FN816P	Washer	X	9
10	C831-201/-704	Wire – Ground (Ref; -201 [COM 1], -704 [COM 2])		
	C831-465/-1427	Wire – Ground (Ref; -465 [GPS 1], -1427 [GPS 2])		
11	B260-3	Terminal	X	A/R
12	A448-15	Bus Bar (3 holes)	X	1
13	B301-8	Nut	X	2
14	B567-43	Screw	X	2
15	NAS557-18A	Grommet	X	1
16	GTN 750*	Transceiver (GPS/NAV/COM)	X	1
	GTN 725*	Transceiver (GPS, not shown)	X	1
17	—	Rack (Ref)		
18	225395-6	Plug (antenna cable)	X	1
19	A226-7	Seal	X	A/R
20	MS27039C0806	Screw	X	4
21	D703-11	Shim	X	A/R
22	MS20426AD3	Rivet	X	2
23	MS24694-S4	Screw	X	1
24	B266-8	Sleeving	X	A/R
25	MS21919WDG16	Clamp	X	1
26	B266-4	Sleeving	X	A/R
27	G704-10	Support	X	1
28	MS20470AD3	Rivet	X	2
29	G703-4	Support Weldment	X	1
30	—	Nut	O	1
31	—	Lockwasher	O	1
32	B297-5	Circuit Breaker (5 amp, includes items 30, 31, 35, and 36)	X	A/R
33	F859-200 or -703	Wire (Ref; -200 [COM 1], -703 [COM 2])		

NOTES * Garmin part no.

Continues

FIGURE AND INDEX NUMBER	PART NUMBER	DESCRIPTION	PARTS AVAIL	QTY PER ASSY
		PILOT'S SIDE CONSOLE – GARMIN GTN 700-SERIES GPS (Cont'd)		
97-33-34	A448	Bus Bar (Ref)		
35	—	Washer	O	1
36	—	Screw	O	2
37	F859-466 or -1426	Wire (Ref; -466 [GPS 1], -1426 [GPS 2])		

NOTES

Intentionally Blank

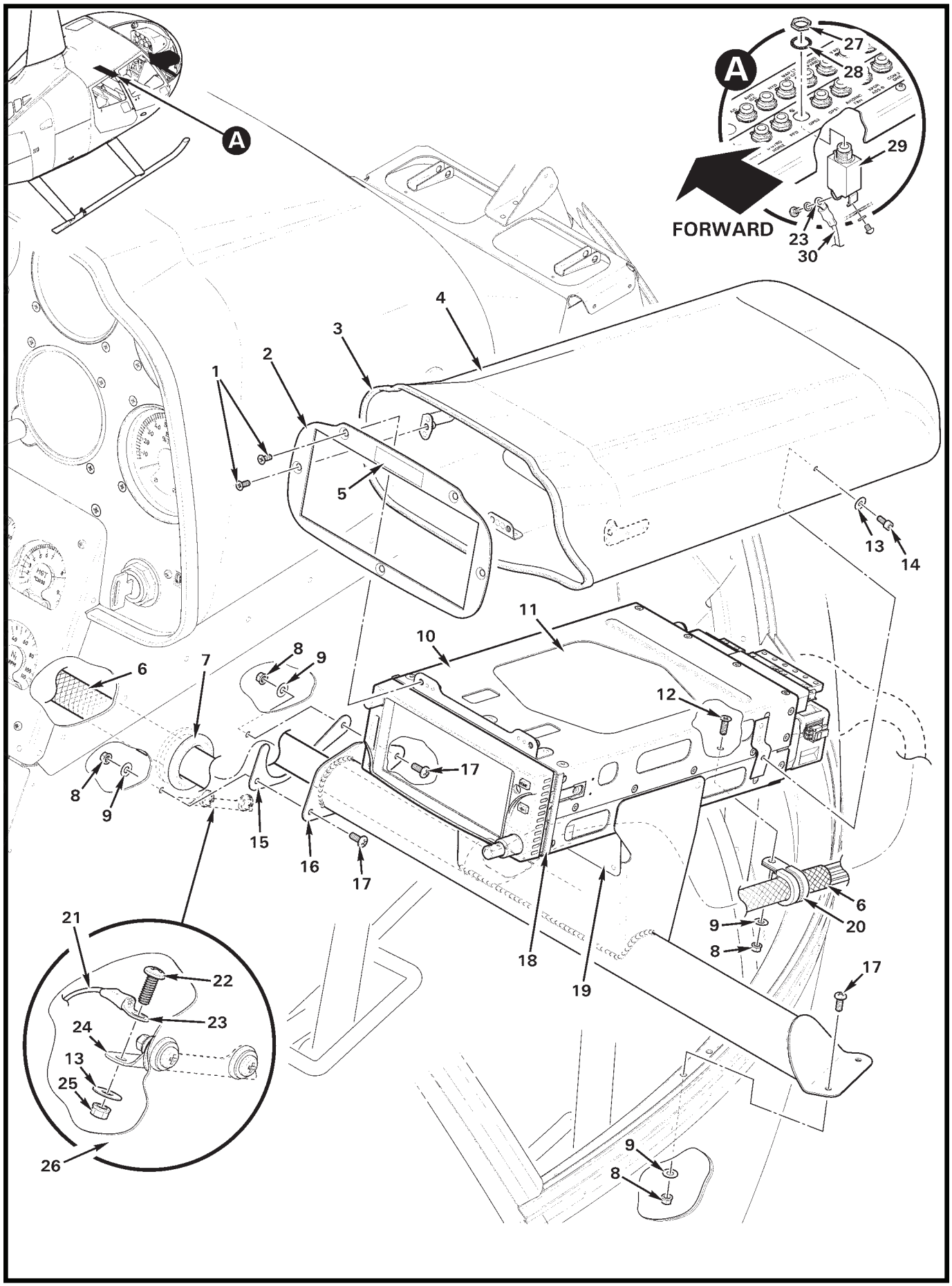

FIGURE 97-37 PILOT'S SIDE CONSOLE – GARMIN GTN 600-SERIES GPS (SINGLE)

FIGURE AND INDEX NUMBER	PART NUMBER	DESCRIPTION	PARTS AVAIL	QTY PER ASSY
		PILOT'S SIDE CONSOLE – GARMIN GTN 600-SERIES GPS (SINGLE)		
97-37-1	MS24693-S4	Screw	X	5
2	G704-5	Faceplate	X	1
3	A226-11	Trim (install with retaining rib on inside)	X	A/R
4	G704-1	Shell Assembly (Incl item 3)	O	1
5	F654-40	Decal (trim as required)	X	1
6	B266-8	Sleeving	X	A/R
7	NAS557-18B	Grommet	X	1
8	MS21042L08	Nut	X	5
9	NAS1149FN816P	Washer	X	5
10	—	Radio Rack Assembly (Ref, supplied with receiver or transceiver)		
11	GTN 650*	Transceiver (GPS/COM/NAV)	X	1
	GTN 635*	Transceiver (GPS/COM, not shown)	X	1
	GTN 625*	Transceiver (GPS, not shown)	X	1
12	MS24694-S4	Screw	X	1
13	NAS1149FN616P	Washer	X	4
14	92196A145	Screw	X	2
15	D703-11	Shim (3 maximum)	X	A/R
16	G703-4	Support Weldment	X	1
17	MS27039C0806	Screw	X	4
18	A226-7	Seal	X	A/R
19	G704-9	Support	X	1
20	MS21919WDG16	Clamp	X	1
21	-1427	Wire (Ref)		
22	94070A146	Screw	X	1
23	B260-3	Terminal (Ref)		
24	A448-19	Bus Bar (Ref)		
25	MS21042L06	Nut	X	1
26	F359-2	Panel – Console (Ref)		
27	—	Nut	X	1
28	—	Lockwasher	X	1
29	B297-5	Circuit Breaker (5 amp; includes items 27 and 28)	X	1
30	-1426	Wire (Ref)		

NOTES * Garmin part no.

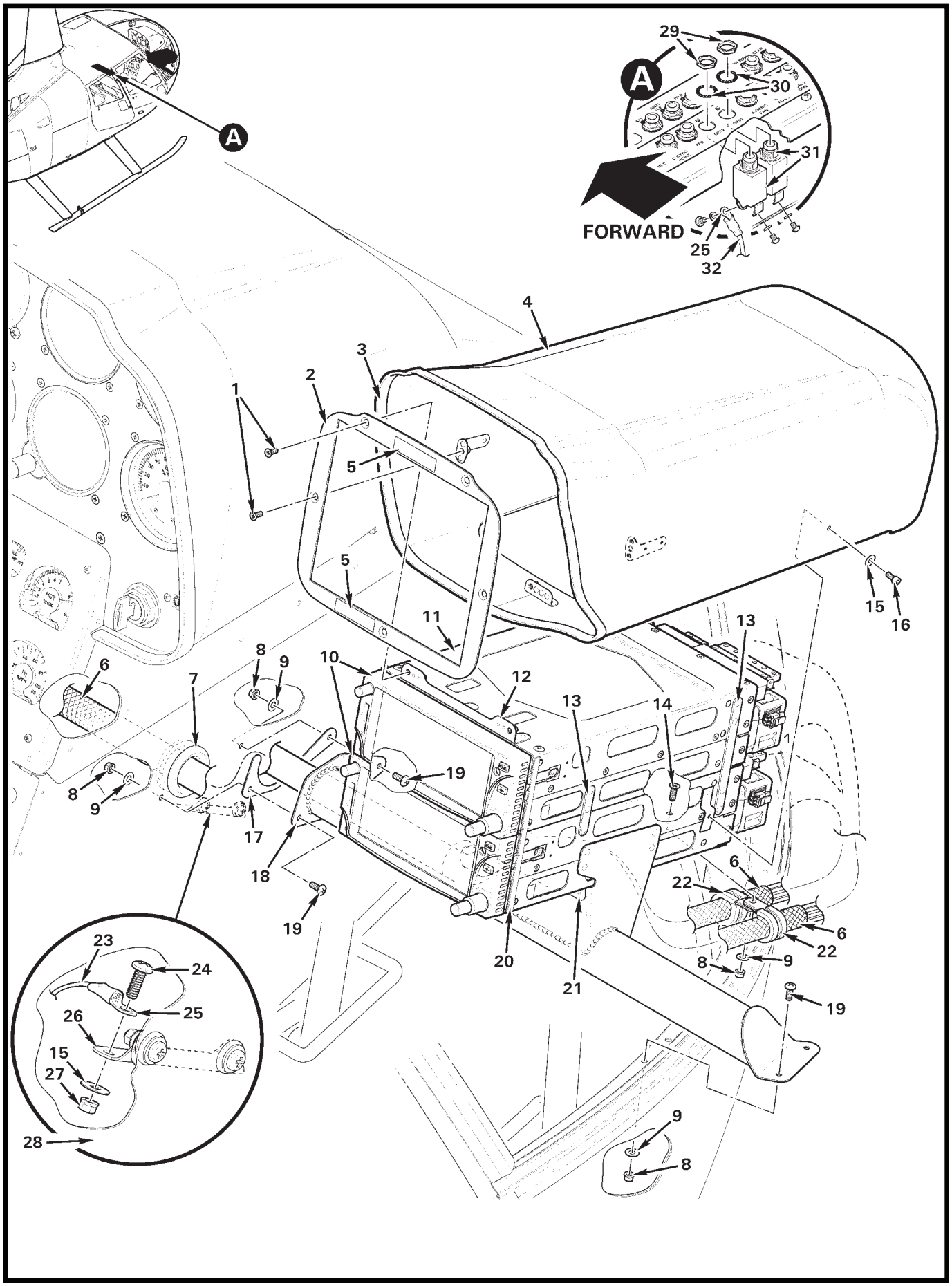

FIGURE 97-39 PILOT'S SIDE CONSOLE – GARMIN GTN 600-SERIES GPS (DUAL)

FIGURE AND INDEX NUMBER	PART NUMBER	DESCRIPTION	PARTS AVAIL	QTY PER ASSY
		PILOT'S SIDE CONSOLE – GARMIN GTN 600-SERIES GPS (DUAL)		
97-39-1	MS24694-S4	Screw	X	5
2	G704-13	Faceplate	X	1
3	A226-11	Trim (install with retaining rib on inside)	X	A/R
4	G704-11	Shell Assembly (Incl item 3)	O	1
5	F654-40	Decal (trim as required)	X	2
6	B266-8	Sleeving	X	A/R
7	NAS557-18B	Grommet	X	1
8	MS21042L08	Nut	X	5
9	NAS1149FN816P	Washer	X	4
10	GTN 625*	GPS Transceiver	X	A/R
	GTN 635*	GPS Transceiver	X	A/R
	GTN 650*	GPS Transceiver	X	A/R
11	—	Radio Rack Assembly (supplied with receiver or transceiver)	O	2
12	G704-7	Angle Assembly (Ref)		
13	A684-1	Strap (Ref)		
14	MS24694-S5	Screw	X	1
15	NAS1149FN616P	Washer	X	3
16	92196A145	Screw	X	2
17	D703-11	Shim (3 maximum)	X	A/R
18	G703-4	Support Weldment	X	1
19	MS27039C0806	Screw	X	4
20	A226-7	Seal	X	A/R
21	G704-10	Support	X	1
22	MS21919WDG16	Clamp	X	2
23	-465	Wire (Ref; GPS 1)		
	-1427	Wire (Ref; GPS 2)		
24	94070A146	Screw	X	1
25	B260-3	Terminal (Ref)		
26	A448-19	Bus Bar (Ref)		
27	MS21042L06	Nut	X	1
28	F359-2	Panel – Console (Ref)		
29	—	Nut	O	2
30	—	Lockwasher	O	2
31	B297-5	Circuit Breaker (5 amp; includes items 29 and 30)	X	2
32	-466	Wire (Ref; GPS 1)		
	-1426	Wire (Ref; GPS 2)		

NOTES * Garmin part no.

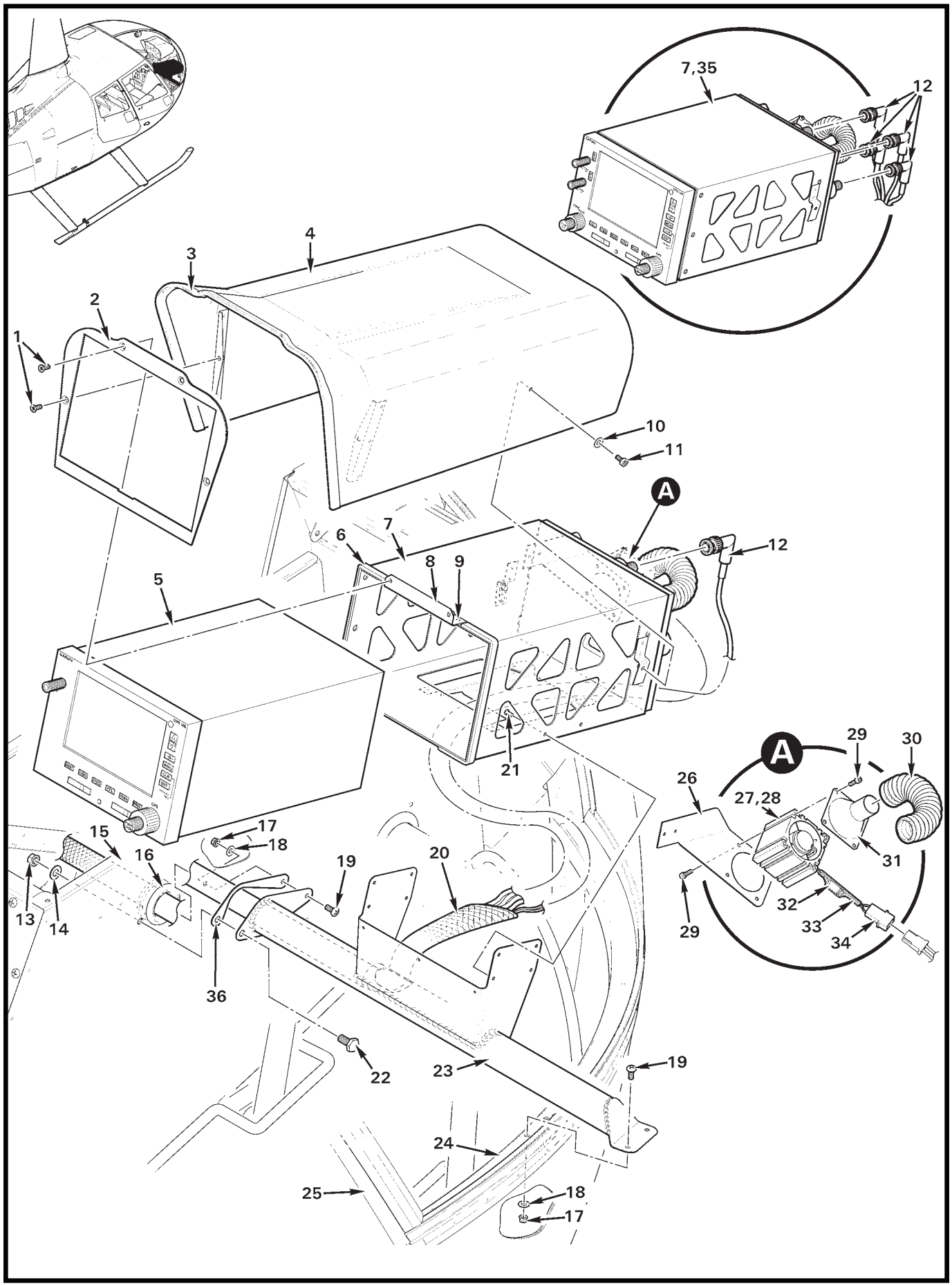
7,35
12
4
3
2
1
10
11
A
7
6
8
9
12
5
21
A
29
30
26
27,28
31
15
17
18
16
19
20
13
14
32
33
29
34
36
22
23
19
24
25
18
17

FIGURE AND INDEX NUMBER	PART NUMBER	DESCRIPTION	PARTS AVAIL	QTY PER ASSY
		PILOT'S SIDE CONSOLE – GARMIN 500-SERIES GPS*		
97-41-1	MS24693-S26	Screw	X	4
2	D704-1	Faceplate	X	1
3	A226-11	Trim (install with retaining rib on inside)	X	A/R
4	D184-1	Shell Assembly (Incl item 3)	O	1
5	GPS 500W**	GPS Receiver (Ref)		
6	A226-7	Seal	X	A/R
7	—	Radio Rack Assembly (Ref, supplied with receiver or transceiver)		
8	D704-9	Angle Assembly	X	1
9	MS20426AD3	Rivet	X	3
10	NAS1149FN616P	Washer	X	2
11	92196A145	Screw	X	2
12	225973-4	Plug (90° BNC; one plug for GPS wiring, additional plugs for Com and Nav wiring)	X	A/R
13	MS21042L4	Nut	X	1
14	NAS1149F0432P	Washer	X	1
15	F359-2	Panel – Console (Ref)		
16	NAS557-14B	Grommet	X	1
17	MS21042L08	Nut	X	3
18	NAS1149FN816P	Washer	X	3
19	MS27039C0806	Screw	X	3
20	B266-8	Sleeving	X	A/R
21	NAS1097AD4	Rivet	X	4
22	NAS6604-2	Bolt (longer dash no. bolt may be used when item 36 is used)	X	1
23	G703-1	Support Weldment Assembly	O	1
24	F238-1	Frame Assembly (Ref)		
25	F090-2	Windshield Frame – RH (Chin, Ref)		
26	D704-6	Bracket	X	1
27	D580-2	Fan Assembly (Incl items 28, and 32 thru 34)	X	1
28	D351M-024GK-2	Fan	X	1
29	92196A108	Screw	X	8
30	5399K17	Hose	X	1
31	D704-11	Nozzle	X	1
32	SPH-330	Resistor	X	1
33	B158-404	Heat Shrink	X	A/R

NOTES * Earlier R66s.
** Garmin part no.

Continues

FIGURE AND INDEX NUMBER	PART NUMBER	DESCRIPTION	PARTS AVAIL	QTY PER ASSY
		PILOT'S SIDE CONSOLE – GARMIN 500-SERIES GPS (Cont'd)		
97-41-34	B263-12	Housing	X	1
	B263-1	Pin	X	2
35	GNS 530AW*	GPS Transceiver (Ref)		
36	D703-8	Shim	X	A/R

NOTES * Garmin part no.

Intentionally Blank

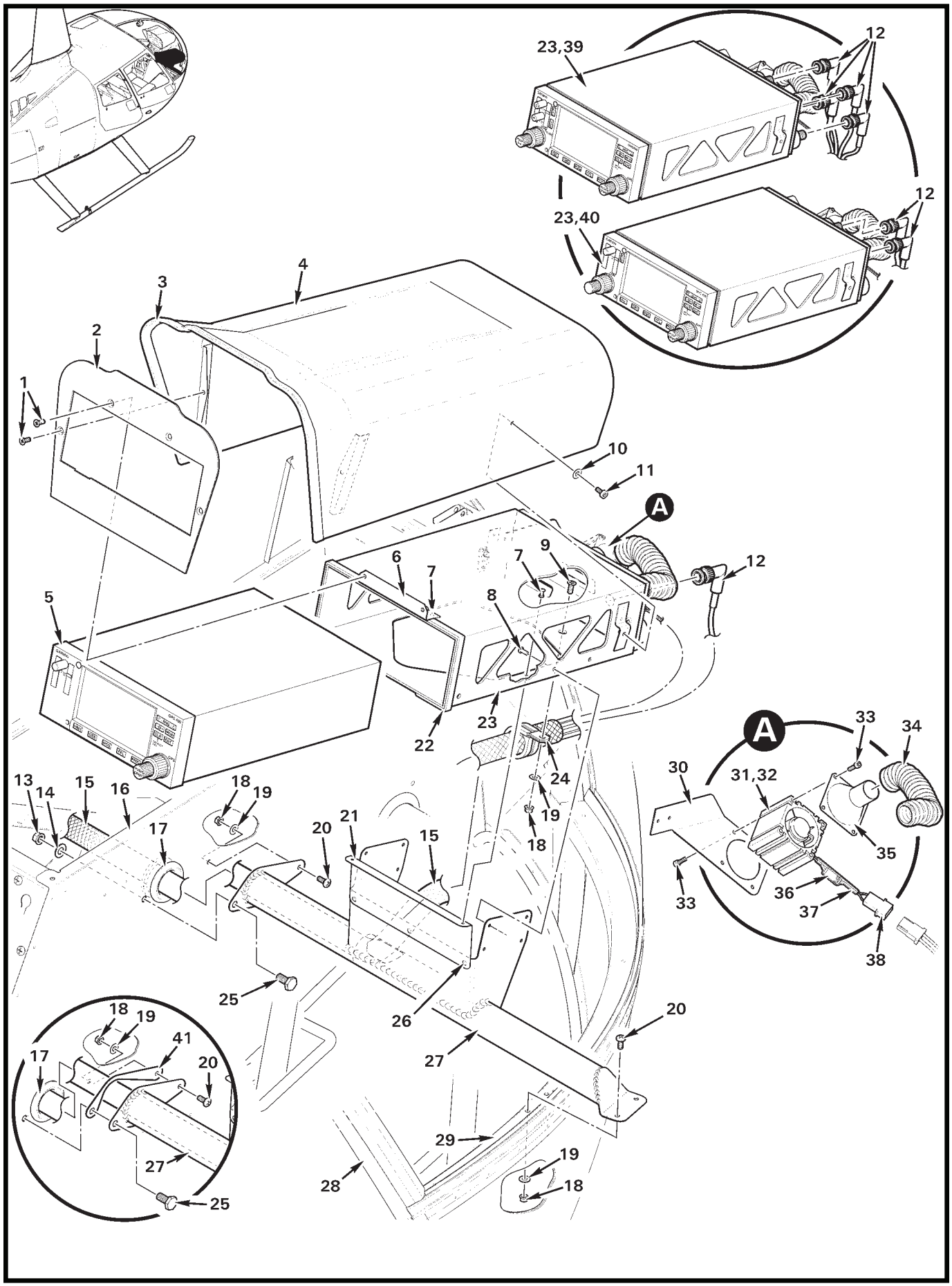
23,39
12
12
23,40
4
3
2
1
10
11
A
6
7
7
9
12
5
8
23
22
A
33
34
30
31,32
24
13
14
15
16
18
19
19
18
17
20
21
15
35
33
36
37
38
25
26
20
18
19
41
17
20
27
29
19
28
18
25

FIGURE AND INDEX NUMBER	PART NUMBER	DESCRIPTION	PARTS AVAIL	QTY PER ASSY
		PILOT'S SIDE CONSOLE – GARMIN 400-SERIES GPS		
97-45-1	MS24693-S4	Screw	X	5
2	G704-5	Faceplate	X	1
3	A226-11	Trim (install with retaining rib on inside)	X	A/R
4	G704-1	Shell Assembly (Incl item 3)	O	1
5	GPS 400W*	GPS Receiver (Ref)		
6	G704-7	Angle Assembly	X	1
7	MS20426AD3	Rivet	X	5
8	NAS1097AD4	Rivet	X	4
9	MS24694-S4	Screw	X	1
10	NAS1149FN616P	Washer	X	2
11	92196A145	Screw	X	2
12	225973-4	Plug (90° BNC; one plug for GPS wiring, additional plugs for COM and NAV wiring)	X	A/R
13	MS21042L4	Nut	X	1
14	NAS1149F0432P	Washer	X	1
15	B266-8	Sleeving	X	A/R
16	F359-2	Panel – Console (Ref)		
17	NAS557-18A	Grommet	X	1
18	MS21042L08	Nut	X	5
19	NAS1149FN816P	Washer	X	5
20	MS27039C0806	Screw	X	4
21	G704-9	Support	X	1
22	A226-7	Seal	X	A/R
23	—	Radio Rack Assembly (Ref, supplied with receiver or transceiver)		
24	MS21919WDG14	Clamp	X	1
25	NAS6604-2	Bolt	X	1
26	MS20470AD3	Rivet	X	3
27	G703-4	Support Weldment Assembly (Incl items 21 and 26)	X	1
28	F238-1	Frame Assembly (Ref)		
29	F090-2	Windshield Frame – RH (Chin, Ref)		
30	D704-6	Bracket	X	1
31	D580-2	Fan Assembly (Incl items 32, and 36 thru 38)	X	1
32	D351M-024GK-2	Fan	X	1
33	92196A108	Screw	X	8

NOTES * Garmin part no.

Continues

FIGURE AND INDEX NUMBER	PART NUMBER	DESCRIPTION	PARTS AVAIL	QTY PER ASSY
		PILOT'S SIDE CONSOLE – GARMIN 400-SERIES GPS (Cont'd)		
97-45-34	5399K17	Hose	X	1
35	D704-11	Nozzle	X	1
36	SPH-330	Resistor	X	1
37	B158-404	Heat Shrink	X	A/R
38	B263-12	Housing	X	1
	B263-1	Pin	X	2
39	GNS 430W*	GPS Transceiver (Ref)		
40	GNC 420W*	GPS Transceiver (Ref)		
41	D703-11	Shims	X	A/R

NOTES * Garmin part no.

Intentionally Blank

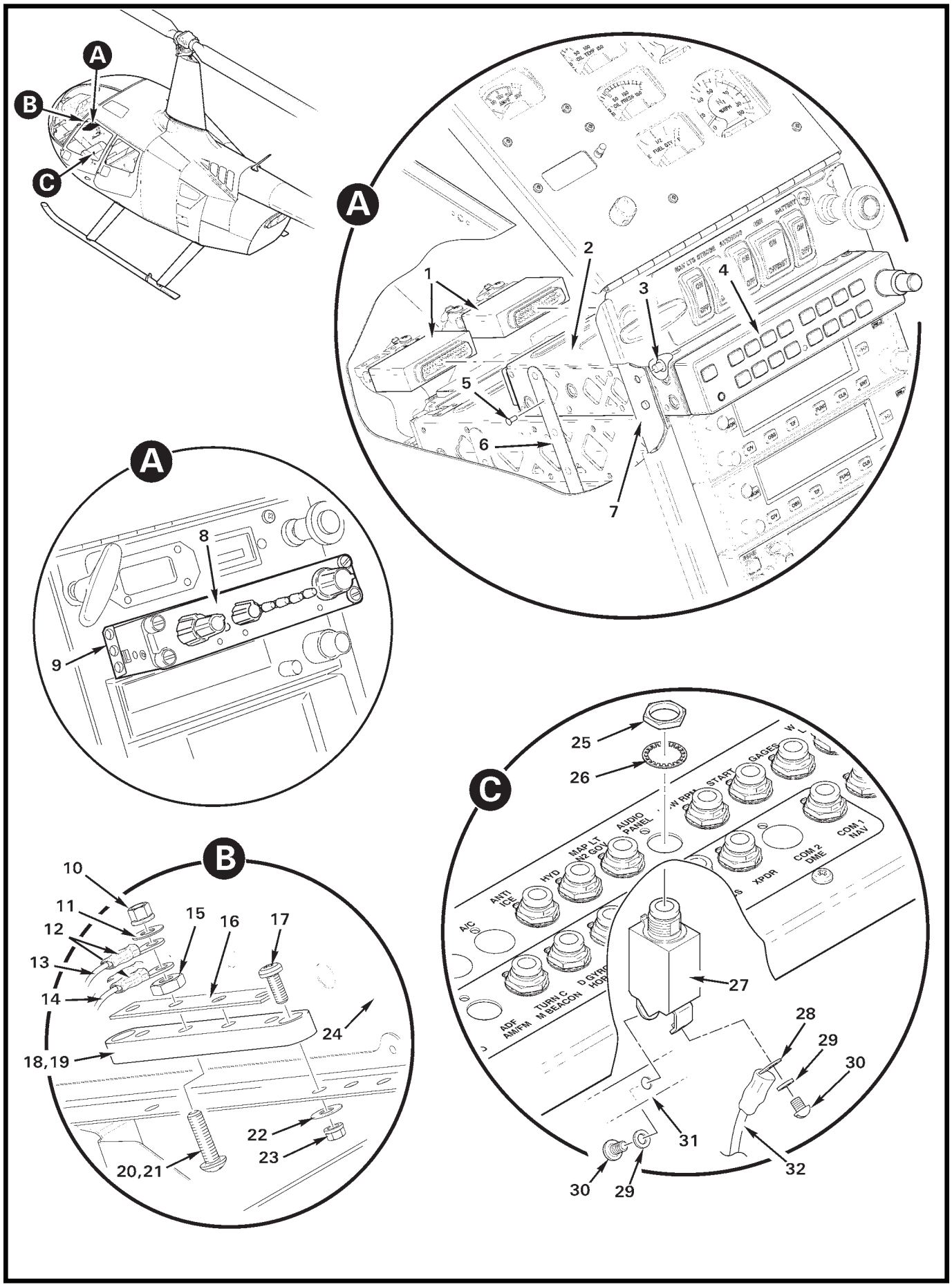

FIGURE 97-49 AUDIO CONTROL INSTALLATION

FIGURE AND INDEX NUMBER	PART NUMBER	DESCRIPTION	PARTS AVAIL	QTY PER ASSY
		AUDIO CONTROL INSTALLATION		
97-49-1	011-02302-00*	Connector Kit (Ref)		
2	115-0145-2-00*	Install Rack (Ref)		
3	MS20426AD5	Rivet	X	4
4	GMA350HC	Audio Control (Incl items 1 and 2)	X	1
5	NAS1097AD3	Rivet	X	4
6	A684-1	Strap	X	2
7	C905-5	Angle	X	2
8	AA12S-600	Audio Control (earlier R66s)	X	1
9	A917-2	Strip	X	2
10	MS21042L08	Nut	X	2
11	NAS1149FN816P	Washer	X	1
12	B260-3	Terminal	X	2
13	F859-239	Wire (Ref; ground)		
14	F859-643	Wire (Ref; ground, audio control)		
15	B301-8	Nut	X	4
16	A448-10	Bus Bar	X	1
17	MS35206-228	Screw	X	2
18	C448-2	Terminal Block Assembly (Incl items 15, 16, and 19 thru 21)	X	1
19	C448-5	Block (Ref)		
20	B567-43	Screw (install using item 21)	X	4
21	B270-9	Adhesive	X	A/R
22	NAS1149FN616P	Washer	X	2
23	MS21042L06	Nut	X	2
24	F033-1	Lower Console Assembly (Ref)		
25	—	Nut	O	1
26	—	Lockwasher	O	1
27	B297-5	Circuit Breaker (5 amp; includes items 25, 26, 29, and 30)	X	1
28	B260-2	Terminal	X	1
29	—	Washer	O	1
30	—	Screw	O	1
31	A448-22	Bus Bar (Ref)		
32	F859-644	Wire (Ref; power)		

NOTES * Garmin part no.

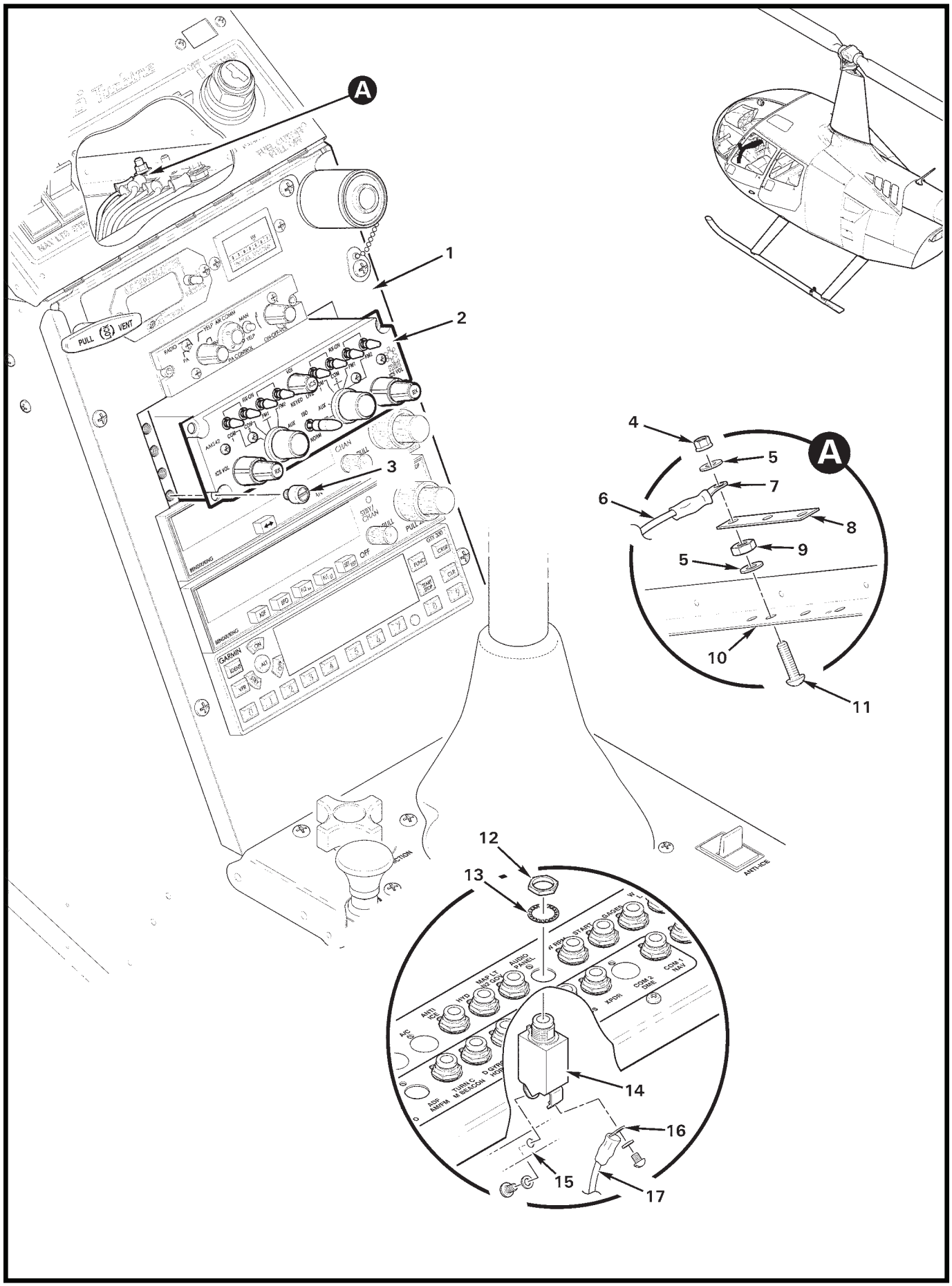

FIGURE 97-51 DUAL AUDIO CONTROL INSTALLATION

FIGURE AND INDEX NUMBER	PART NUMBER	DESCRIPTION	PARTS AVAIL	QTY PER ASSY
		DUAL AUDIO CONTROL INSTALLATION		
97-51-1	G225	Face Assembly (Ref)		
2	AMS42	Dual Audio Control (N. A. T.)	X	1
3	MS24693-S32	Screw	X	3
4	MS21042L08	Nut	X	1
5	NAS1149DN832H	Washer	X	2
6	-951	Wire (Ref)		
7	B260-3	Terminal (Ref)		
8	A448-15	Bus Bar (3-hole)	X	1
9	B301-8	Nut	X	1
10	F365-1	Angle (Ref)		
11	B567-43	Screw	X	1
12	—	Nut	O	1
13	—	Lockwasher	O	1
14	B297-2	Circuit Breaker (2 amp; includes items 12 and 13)	X	1
15	A448-1	Bus Bar (Ref)		
16	B260-2	Terminal (Ref)		
17	-950	Wire (Ref)		

NOTES

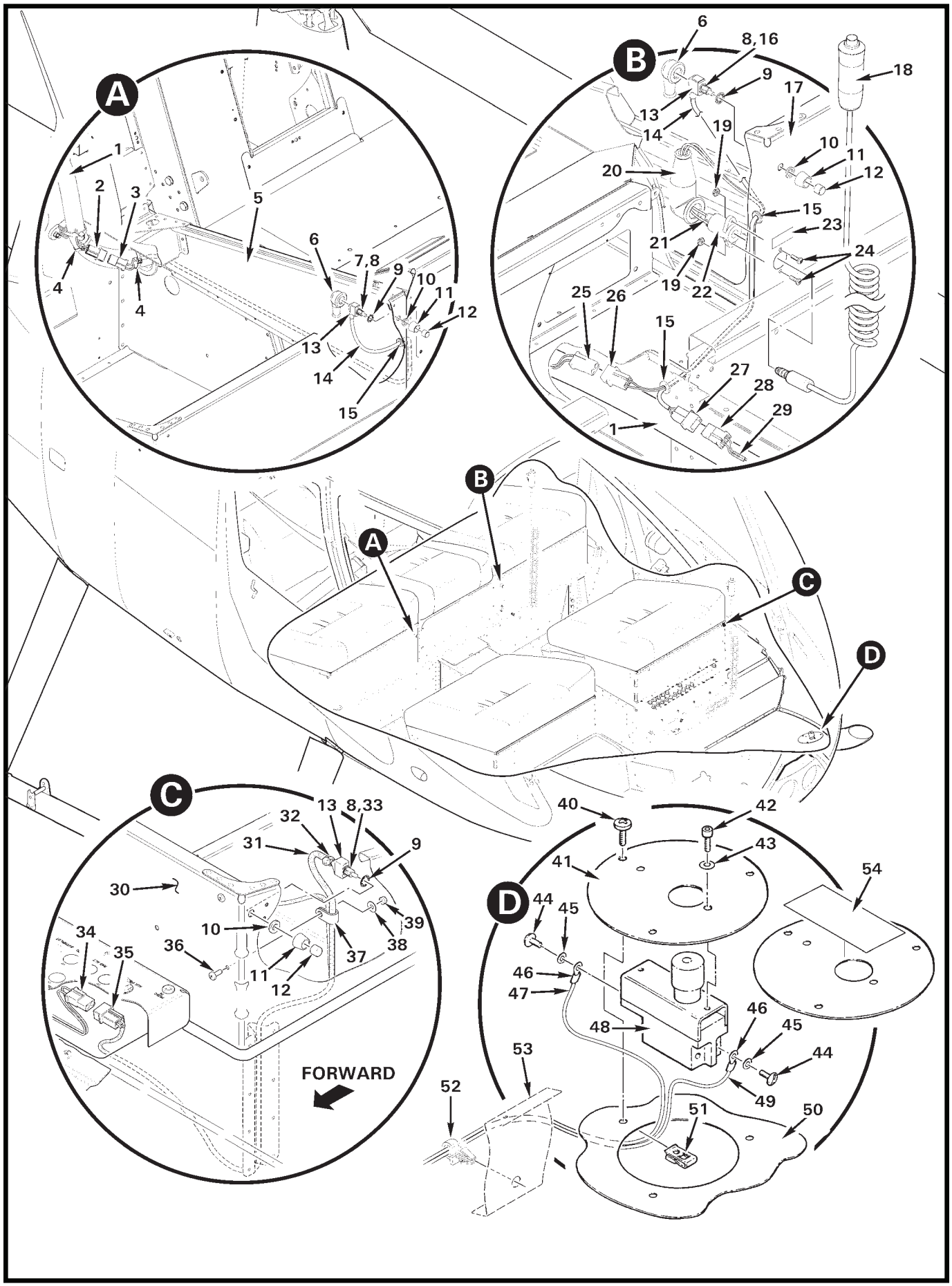

FIGURE 97-53 AUDIO AND INTERCOM SWITCHES INSTALLATION

FIGURE AND INDEX NUMBER	PART NUMBER	DESCRIPTION	PARTS AVAIL	QTY PER ASSY
		AUDIO AND INTERCOM SWITCHES INSTALLATION		
97-53-1	F859	Harness Assembly (Ref; helicopter main)		
2	B263-13	Housing	X	1
	B263-2	Socket	X	2
	B859-595	Wire (Ref)		
	B859-640	Wire (Ref)		
3	B263-12	Housing	X	1
	B263-1	Pin	X	2
4	MS3367-5-9	Ty-Rap	X	A/R
5	F291-2	Seat Assembly (Ref; RH, aft)		
6	MS25171-1S	Nipple	X	1
7	C049-13	Harness Assembly (Aft outboard COM switch. Includes items 3, 6, 8, 14 and 15.)	X	1
8	B227-8	Switch Assembly (Incl items 9 thru 12)	X	1
9	B227-3	Lockwasher	X	1
10	94773A770	Washer	X	1
11	702501201	Dress Nut	X	1
12	801801000	Cap	X	1
13	B158-8	Heat Shrink (around item 8)	X	A/R
14	B158-2	Heat Shrink (around wires)	X	A/R
15	MS35489-4	Grommet	X	1
16	C049-10	Harness Assembly (LH aft outboard COM switch. Includes items 3, 6, 8, and 13 thru 15)	X	1
17	F291-1	Seat Assembly (Ref; LH, aft)		
18	B121-1	Transmit Switch Assembly (optional)	X	1
19	B330-2	Palnut	X	2
20	MS25171-2S	Nipple	X	1
21	B158-3	Heat Shrink (around jack terminals)	X	A/R
22	TJ-120	Jack	X	1
23	A654-86	Decal – “TRANSMIT”	X	1
24	MS35206-215	Screw	X	2
25	B263-13	Housing	X	1
	B263-2	Socket	X	2
	G458-2638	Wire (Ref)		
	G458-2639	Wire (Ref; ground)		

NOTES

Continued

FIGURE AND INDEX NUMBER	PART NUMBER	DESCRIPTION	PARTS AVAIL	QTY PER ASSY
		AUDIO AND INTERCOM SWITCHES INSTALLATION (Cont'd)		
97-53-26	B263-32	Housing	X	1
	B263-1	Pin	X	2
27	B263-12	Housing	X	1
	B263-1	Pin	X	2
28	B263-13	Housing	X	1
	B263-2	Socket	X	2
	F859-594	Wire (Ref)		
	F859-640	Wire (Ref)		
	F859-646	Wire (Ref)		
29	B158-3	Heat Shrink (labeled "REAR-L")	X	A/R
30	F297-2	Seat Assembly (Ref; LH, forward)		
31	B266-4	Sleeving	X	A/R
32	MS3367-4-0	Ty-Rap	X	1
33	C049-18	Harness Assembly (Forward outboard COM switch. Includes items 8, 13, 31, 32, and 35.)	X	1
34	B263-13	Housing	X	1
	B263-2	Socket	X	2
	F859-283	Wire (Ref)		
	F859-284	Wire (Ref)		
35	B263-12	Housing	X	1
	B263-1	Pin	X	2
36	MS35206-228	Screw	X	1
37	N-4-BK	Clamp	X	1
38	NAS1149FN616P	Washer	X	1
39	MS21042L06	Nut	X	1
40	MS27039C0806	Screw	X	3
41	A797-1	Cover	X	1
42	NAS1351-06-6P	Screw	X	2
43	NAS620-6	Washer	X	2
44	—	Screw	O	2
45	—	Lockwasher	O	2
46	B260-2	Terminal	X	2
47	F859-283	Wire (Ref)		
48	B565-1*	Switch (Incl items 44 and 45)	X	1
49	F859-284	Wire (Ref)		

NOTES

Continued

FIGURE AND INDEX NUMBER	PART NUMBER	DESCRIPTION	PARTS AVAIL	QTY PER ASSY
		AUDIO AND INTERCOM SWITCHES INSTALLATION (Cont'd)		
97-53-50	F232-1	Floor (Ref; LH)		
51	B162-3*	Clipnut	X	3
52	200-24200-09	Clip	X	2
53	F407-1	Beam (Ref; LH)		
54	A701-1	Tape (foil)	X	A/R

NOTES

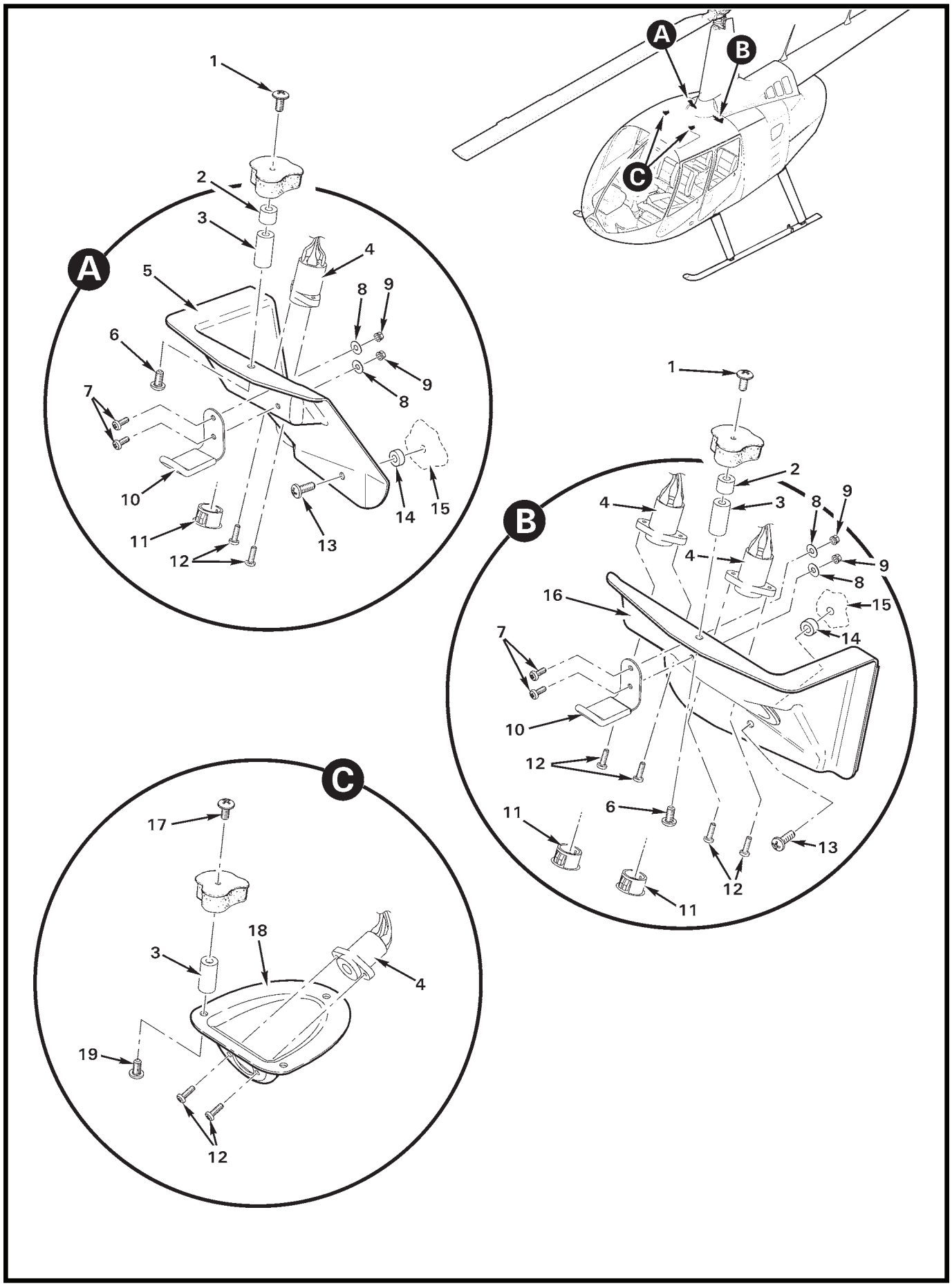
A
B
C
1
2
3
4
5
6
7
8
9
10
11
12
13
14
15
16
17
18
19

FIGURE AND INDEX NUMBER	PART NUMBER	DESCRIPTION	PARTS AVAIL	QTY PER ASSY
		STANDARD HEADSET JACKS INSTALLATION		
97-57-1	MS27039C0811	Screw (thru roof)	X	2
2	A130-33	Spacer	X	2
3	C710-3	Spacer	X	6
4	TJ-120	Jack	X	4
5	F436-6	Cover Assembly (RH)	X	1
6	MS27039C0806	Screw	X	2
7	MS35206-214	Screw	X	4
8	NAS1149FN416P	Washer	X	4
9	MS21042L04	Nut	X	4
10	A752-3	Angle	X	2
11	2653	Hole Plug	X	3
12	A142-5	Screw	X	8
13	MS27039C0808	Screw	X	2
14	A130-37	Spacer	X	2
15	F439-1	Duct (Ref)		
16	F436-5	Cover Assembly (LH)	X	1
	F436-1	Cover Assembly (LH; earlier ships)	O	1
17	AN526C832R6	Screw	X	6
18	C710-1	Cover (RH and LH)	X	2
19	MS27039C0805	Screw	X	6

NOTES

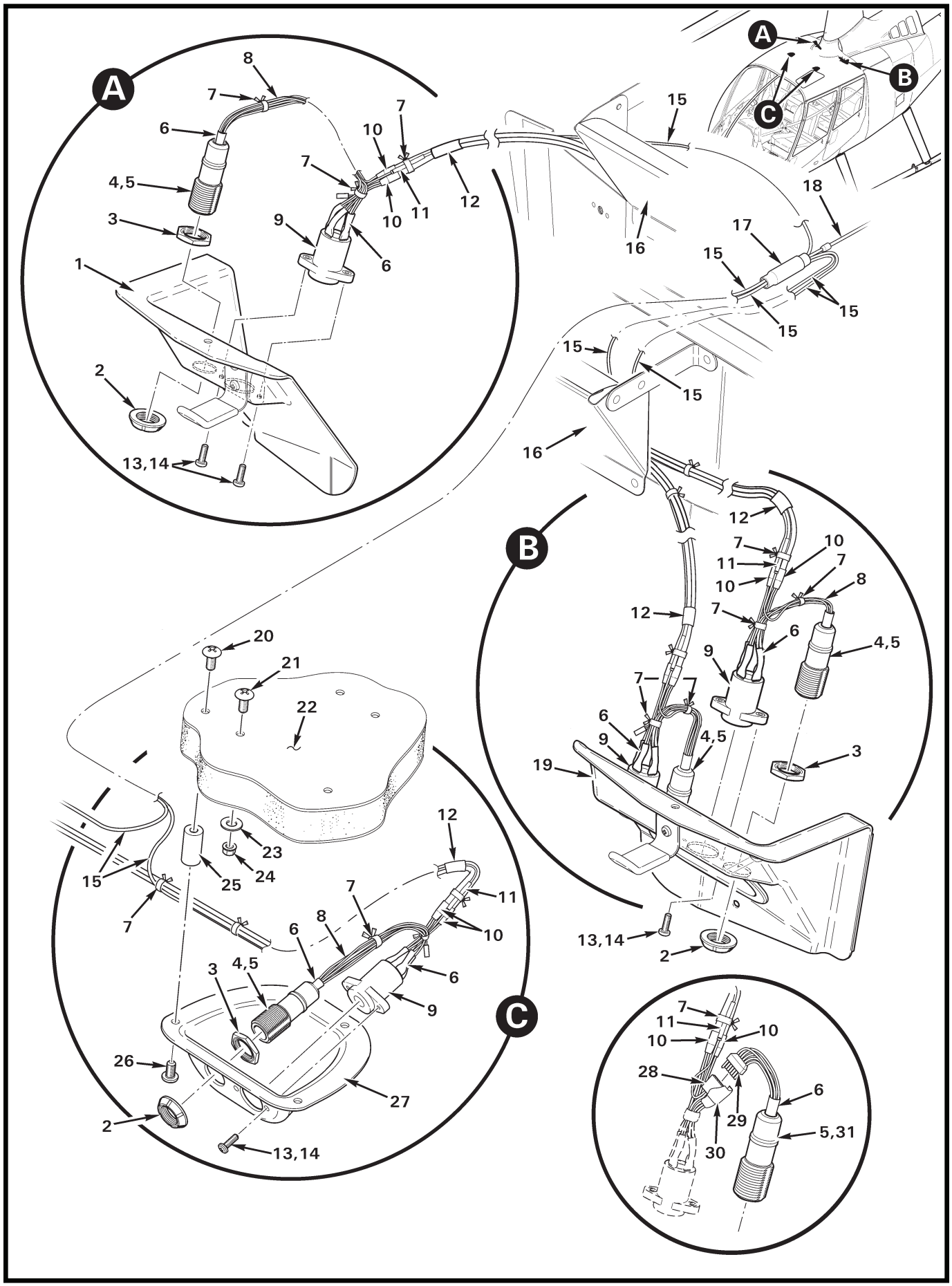
A
B
C
8
7
6
4,5
3
1
2
13,14
9
10
11
12
15
16
17
18
19
20
21
22
23
24
25
26
27
28
29
30
5,31

FIGURE AND INDEX NUMBER	PART NUMBER	DESCRIPTION	PARTS AVAIL	QTY PER ASSY
		BOSE HEADSET JACKS INSTALLATION		
97-59-1	F436-6*	Cover Assembly (RH, aft; Ref)		
2	R5694	Nut (brass, black chromed)	X	1
3	–	Nut (hex)	O	1
4	D746-4	Wire Harness Assembly (Incl items 5, 6, and 8)	X	1
5	D746-2	Connector Kit (Incl items 2 and 3)	O	1
6	B158-3	Heat Shrink	X	A/R
7	B268-3	Lacing Tape	X	A/R
8	–	Wires (labled, Ref)	O	6
9	TJ-120*	Jack (Ref, see Figure 97-57)		
10	B158-2	Heat Shrink	X	A/R
11	B267-5	Wire Splice	X	5
12	B158-4	Heat Shrink (labeled)	X	A/R
13	A142-5	Screw (install using item 14)	X	10
14	B270-20	Adhesive	X	A/R
15	F859-2221	Wire (Ref)		
16	F437-1	Duct (Ref)		
17	B267-6	Solder Splice	X	1
18	F859-1492	Wire (power from audio, Ref)		
19	F436-5*	Cover Assembly (LH, aft; Ref)		
20	AN526C832R6	Screw (do not substitute MS27039 screws)	X	8
21	AN526C832R6**	Screw (this location only)	X	1
22	F273-1	Roof (Ref)		
23	NAS1149FN816P	Washer	X	1
24	MS21042L08	Nut	X	1
25	C710-3	Spacer	X	8
26	MS27039C0805	Screw	X	8
27	C710-4	Cover	X	2
28	837062907**	Connector Assembly	X	1
29	837061905**	Connector Assembly	X	1
30	B158-6**	Heat Shrink	X	A/R
31	D746-3**	Wire Harness Assembly (Incl items 5 and 29)	X	5

NOTES * See Figure 97-57.
** R66 ship S/N 0520, and 0522 thru 1006.

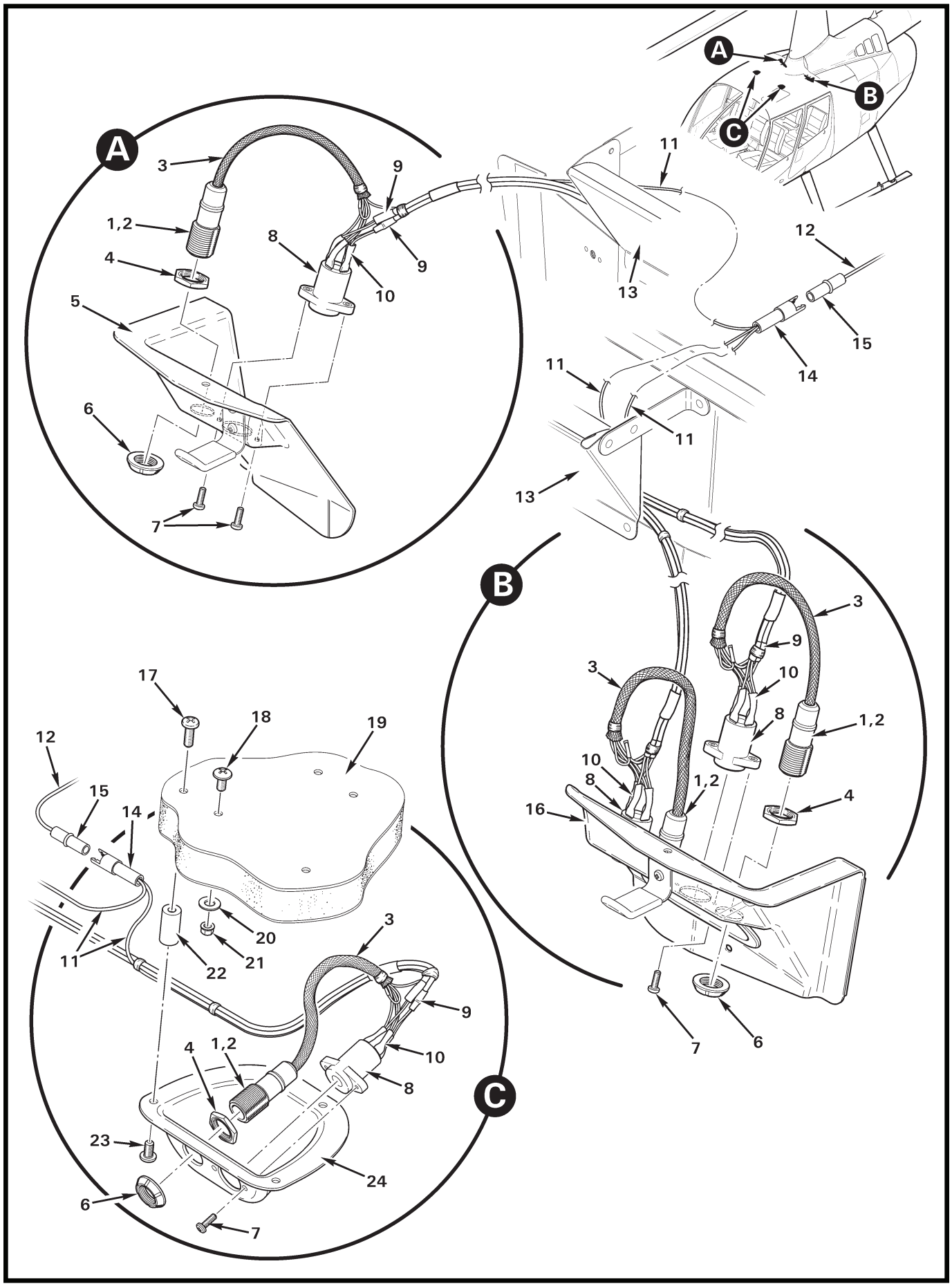
A
B
C
3
1,2
4
5
6
7
8
9
10
11
12
13
14
15
16
17
18
19
20
21
22
23
24

FIGURE AND INDEX NUMBER	PART NUMBER	DESCRIPTION	PARTS AVAIL	QTY PER ASSY
		BOSE HEADSET JACKS INSTALLATION*		
97-61-1	D746-1	Wire Harness Assembly (Incl items 2, 3, and 11)	X	A/R
2	D746-2	Connector Kit (includes connector, and items 4 and 6)	O	1
3	B266-4	Sleeving	X	A/R
4	—	Nut (hex)	O	1
5	F436-2**	Cover (aft, RH; Ref)		
6	R5694	Nut (brass, black chromed)	X	1
7	MS35206-215**	Screw (Ref)		
8	TJT-120**	Jack (Ref)		
9	B158-1	Heat Shrink	X	A/R
10	B158-2	Heat Shrink	X	A/R
11	D746-2221	Wire (Ref)		
12	F059-1492	Wire (Ref)		
13	F437-1	Duct (Ref)		
14	B263-10	Housing	X	A/R
	B263-1	Pin	X	1
15	B263-11	Housing (Ref)		
16	F436-1**	Cover (aft, LH; Ref)		
17	MS27039C0811	Screw	X	8
18	AN526C832R6	Screw	X	1
19	F273-1	Roof (Ref)		
20	NAS1149FN816P	Washer	X	1
21	MS21042L08	Nut	X	1
22	C710-3	Spacer	X	8
23	MS27039C0806	Screw	X	8
24	C710-4	Cover (forward, RH and LH; LH shown)	X	2

NOTES * Earlier R66s.
** See Figure 97-57.

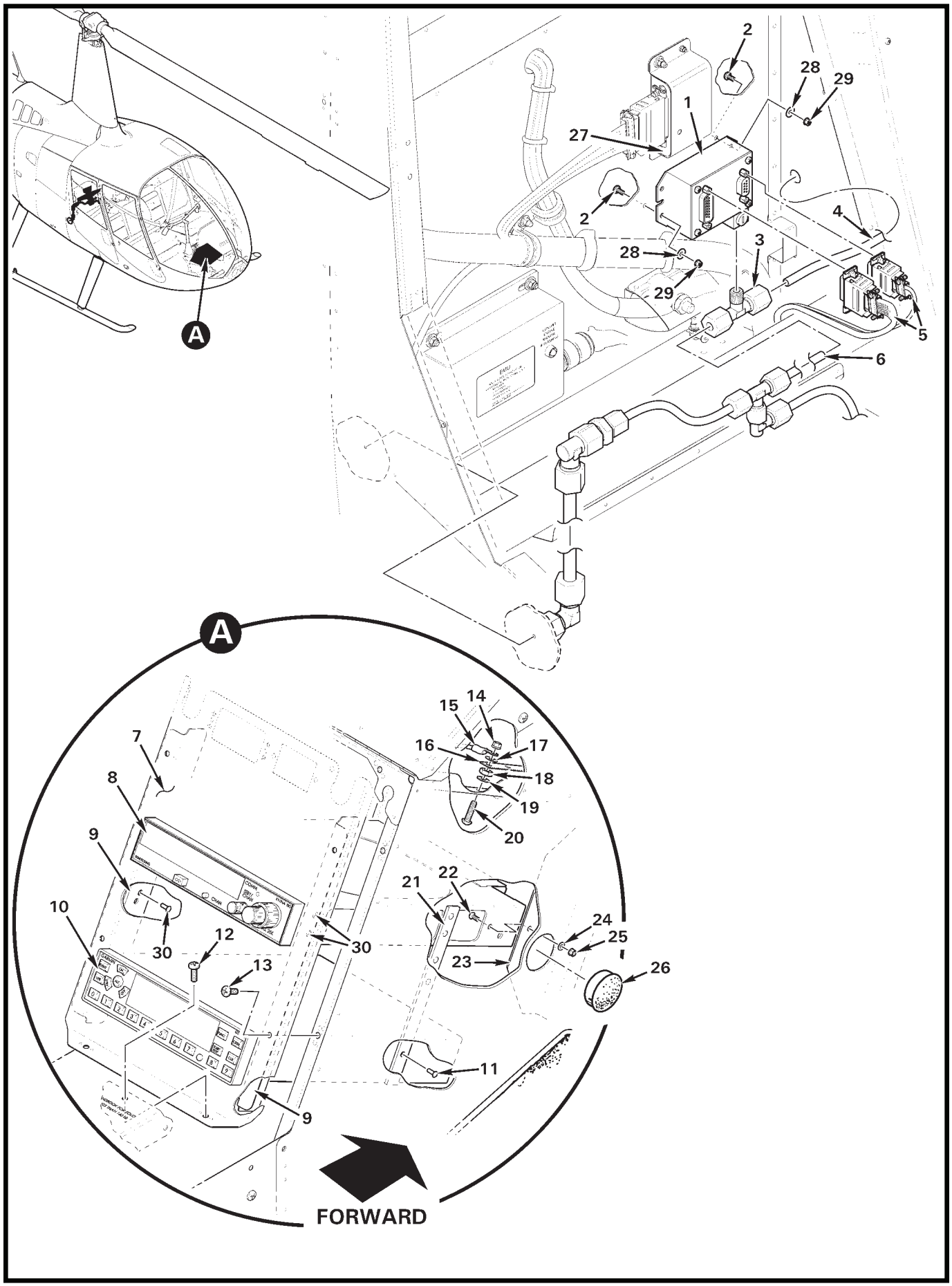

FIGURE 97-63 TRANSPONDER AND BLIND ENCODER INSTALLATION

FIGURE AND INDEX NUMBER	PART NUMBER	DESCRIPTION	PARTS AVAIL	QTY PER ASSY
		TRANSPONDER AND BLIND ENCODER INSTALLATION		
97-63-1	B240-3	Blind Encoder	X	1
2	MS35206-227	Screw	X	2
3	70-4-N-0	Tee	X	1
4	A729-24	Tube (Ref)		
5	F859-01	Wire Harness (Ref, 8-hole console)		
	F059-01	Wire Harness (Ref, 7-, 9-hole console; earlier ships)		
6	A729-53	Tube (Ref)		
7	G225	Panel – Avionics (Ref)		
8	KY0196A-60*	Com Transceiver (Bendix/King, Ref)		
9	C905-5	Angle	X	2
10	GTX 327	Transponder (Mode C)	O	1
	GTX 328	Transponder (Mode S)	O	1
	GTX 330	Transponder (Mode S w/ADS-B Out & TIS-A)	O	1
	GTX 33	Transponder (Mode S w/ADS-B Out & TIS-A)	O	1
11	NAS1097AD	Rivet	X	8
12	MS27039C0806	Screw (Ref)		
13	MS27039C0807	Screw (Ref)		
14	MS21042L08	Nut	X	1
15	-260	Wire (Ref)		
16	A448-15	Bus Bar (3-hole)	X	1
17	NAS1149FN816P	Washer	X	1
18	B301-8	Nut	X	1
19	NAS1149DN832H	Washer	X	1
20	B567-43	Screw	X	1
21	A684-1	Strap	X	2
22	—	Screw (6-32 countersunk, supplied with radio)	X	2
23	A371-3	Stiffener	X	2
24	NAS1149FN616P	Washer	X	2
25	MS21042L06	Nut	X	2
26	SI413	Hole Plug	X	2
27	F695-4	Tester Assembly – Warning Lights (Ref)		
	F695-1	Tester Assembly – Warning Lights (Ref; earlier ships)		
28	NAS1149FN616P	Washer	X	2
29	MS21042L06	Nut	X	2
30	MS20426AD	Rivet	X	4

NOTES * Garmin 330-00067-00 Notch filter required if Garmin Series 400 or 500 GPS is installed. See figures 6-29 and 6-31 for installation options.

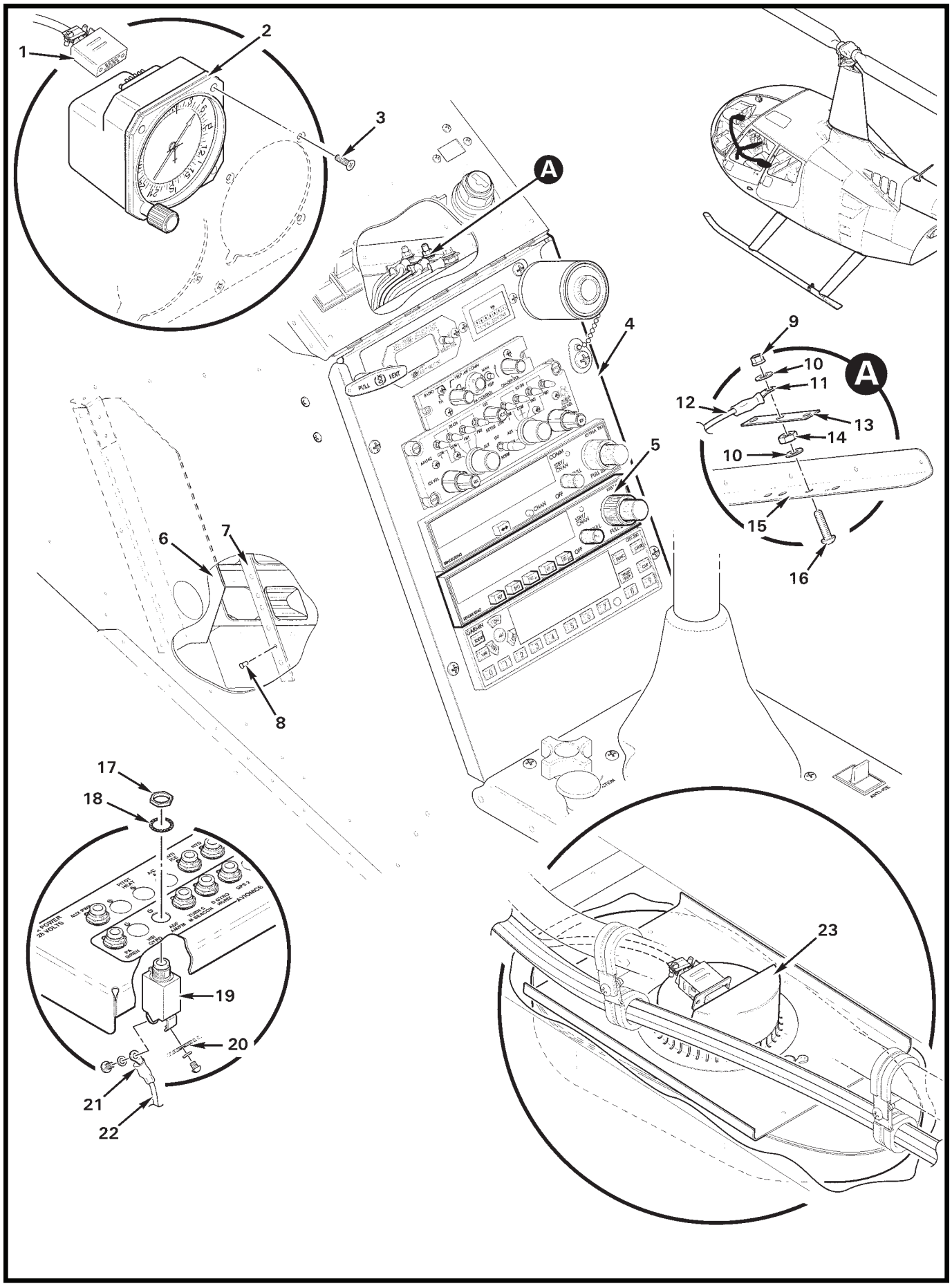

FIGURE 97-65 ADF SYSTEM INSTALLATION

FIGURE AND INDEX NUMBER	PART NUMBER	DESCRIPTION	PARTS AVAIL	QTY PER ASSY
		ADF SYSTEM INSTALLATION		
97-65-1	050-01808-0000	Installation Kit	O	1
2	066-03063-0000	ADF Indicator (Bendix/King, unslaved; includes item 1)	X	1
	KI-227-00R	ADF Indicator (overhaul; Bendix/King, unslaved)	X	1
	066-03063-0001	ADF Indicator (Bendix/King, slaved; includes item 1)	X	1
	KI-227-01R	ADF Indicator (overhaul; Bendix/King, slaved)	X	1
3	MS24693-S32	Screw	X	3
4	G225	Face Assembly (Ref)		
5	KR0087-00	ADF Receiver (Bendix/King)	X	1
6	A371-3	Stiffener (Ref)		
7	A684-1	Strap	X	2
8	MS20470AD3	Rivet	X	8
9	MS21042L08	Nut	X	1
10	NAS1149DN832H	Washer	X	2
11	B260-3	Terminal (Ref)		
12	-271	Wire (Ref)		
13	A448-15	Bus Bar (3-hole)	X	1
14	B301-8	Nut	X	1
15	F365-1	Angle (Ref)		
16	B567-43	Screw	X	1
17	—	Nut	O	1
18	—	Lockwasher	O	1
19	B297-2	Circuit Breaker (2 amp; includes items 17 and 18)	X	1
20	A448-1	Bus Bar (3-hole, Ref)		
21	B260-2	Terminal (Ref)		
22	-270	Wire (Ref)		
23	KA44B	ADF Antenna (Ref; see Figure 6-13)		

NOTES

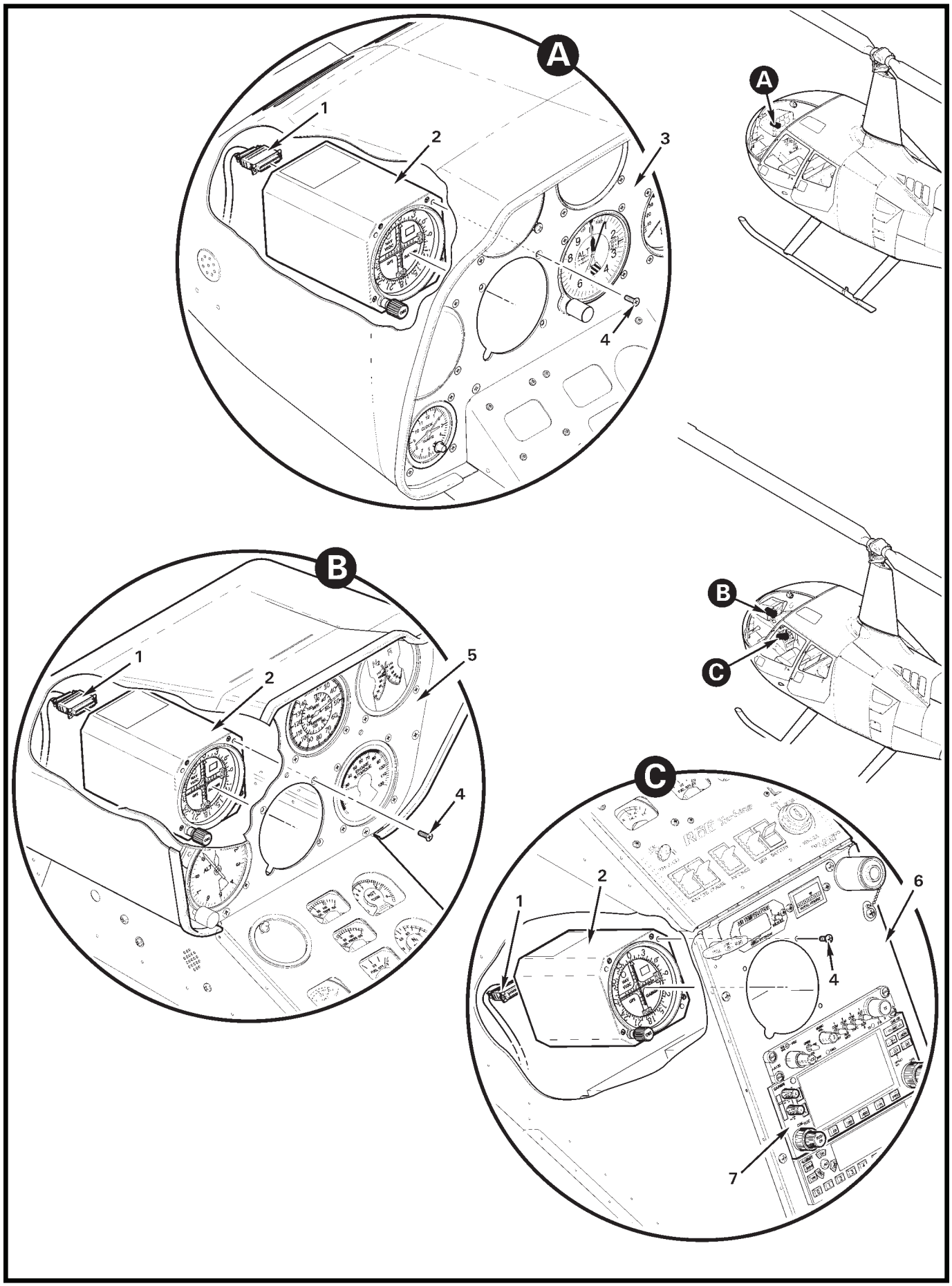

FIGURE 97-67 VOR INDICATOR INSTALLATION

FIGURE AND INDEX NUMBER	PART NUMBER	DESCRIPTION	PARTS AVAIL	QTY PER ASSY
		VOR INDICATOR INSTALLATION		
97-67-1	B269-12	Receptacle	X	1
2	GI-106B	VOR Indicator (Garmin; includes item 4)	O	1
3	G050	Console Assembly (Ref)		
4	—	Screw	O	3
5	B050	Console Assembly (Ref)		
6	G225-25	Face Assembly – Avionics Console (Ref, used with Garmin 400 series only)		
7	GNS 430W	GPS Transceiver (Garmin GPS, Ref)		

NOTES

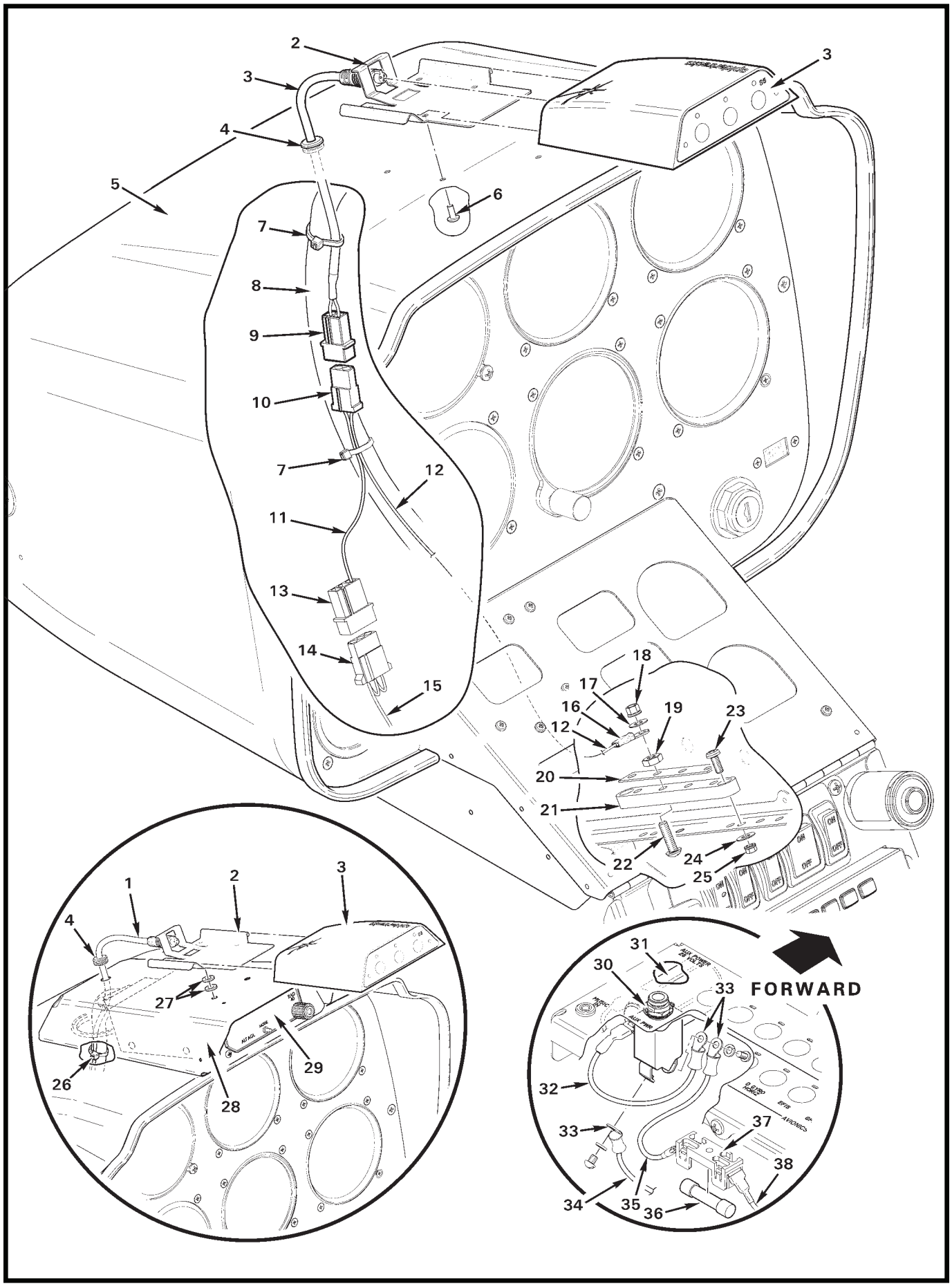
2
3
4
5
6
7
8
9
10
7
12
11
13
14
15
18
17
16
12
19
23
20
21
22
24
25
1
2
3
4
27
26
28
29
31
30
33
FORWARD
32
33
37
38
34
35
36

FIGURE AND INDEX NUMBER	PART NUMBER	DESCRIPTION	PARTS AVAIL	QTY PER ASSY
		SPIDERTRACKS PROVISION INSTALLATION		
97-69-1	2000PWR200	Cable Assembly	O	1
2	3000BRK103-TL	Bracket	O	1
3	—	Spidertracks Reciever (Ref)		
4	MS35489-4	Grommet	X	1
5	—	Upper Console Assembly (Ref)		
6	MS20470AD4	Rivet	X	4
7	MS3367-4-9	Ty-Rap (or MS3367-5-9)	X	A/R
8	G716	Harness Assembly – Console (Ref)		
9	B263-32	Housing	X	1
	B263-1	Pin	X	2
	B158-2	Heat Shrink (around blue wire)	X	A/R
10	B263-33	Housing	X	1
	B263-2	Socket	X	2
11	-2630	Wire (power, Ref)		
12	-2631	Wire (ground, Ref)		
13	B263-34	Housing	X	1
	B263-1	Pin	X	1
14	B263-35	Housing	X	1
	B263-2	Socket	X	1
15	F859-2626	Wire (Ref)		
16	B260-2	Terminal	X	1
17	NAS1149FN816P	Washer (Ref)		
18	MS21042L08	Nut (Ref)		
19	B301-8	Nut (Ref)		
20	A448	Bus Bar (Ref)		
21	C448	Terminal Block Assembly (Ref)		
22	B567-43	Screw (Ref)		
23	MS35206-228	Screw (Ref)		
24	NAS1149FN616	Washer (Ref)		
25	MS21042L06	Nut (Ref)		
26	MS3367-4-9	Ty-Rap	X	1
27	NAS620-5	Washer (two at each rivet)	X	8
28	B560	Enclosure (Ref)		
29	—	Radar Altimeter Indicator (Ref)		
30	B297-10	Circuit Breaker (10-amp, “AUX POWER”)	X	1

NOTES

Continues

FIGURE AND INDEX NUMBER	PART NUMBER	DESCRIPTION	PARTS AVAIL	QTY PER ASSY
		SPIDERTRACKS PROVISION INSTALLATION (Cont'd)		
97-69-31	D692-4	Socket (Ref)		
32	-626	Wire (Ref, power to item 30)		
33	B260-2	Terminal (Ref)		
34	F859-2570	Wire (Ref)		
35	F859-626	Wire (Ref)		
36	AGC-5	Fuse (5 amp)	X	1
37	D262-1	Fuseblock (Ref)		
38	F859-2626	Wire (power, Ref)		

NOTES

CHAPTER 99

SPECIAL TOOLS

Figure	*Title*	*Page*
99-1	Field Kits	99.1
99-3	R66 Technical Publications	99.3
—	Special Tools	99.5
99-7	Shipping Crates	99.7
99-9	Shipping Crates	99.9

Intentionally Blank

FIGURE AND INDEX NUMBER	PART NUMBER	DESCRIPTION	PARTS AVAIL	QTY PER ASSY
		FIELD KITS		
99-1-1	KI-6601*	R66-series Minimum Spare Parts Kit		
2	R8480*	2000-Hour Maintenance and Inspection Kit		
3	KI-6603*	R66 Interior Furnishings Installation Field Kit		
4	R7983*	R66 C017-5 Swashplate Installation Field Kit		

NOTES * See www.robinsonheli.com for the latest kit contents.

Intentionally Blank

FIGURE AND INDEX NUMBER	PART NUMBER	DESCRIPTION	PARTS AVAIL	QTY PER ASSY
		R66 TECHNICAL PUBLICATIONS		
99-3-1	R8345	R66 Maintenance Manual (Incl items 2 thru 4)	X	1
2	R8346	R66 Maintenance Manual – Binder	X	1
3	R8348	R66 Maintenance Manual – Tabs	X	1
4	R8347	R66 Maintenance Manual – Insert	O	1
5	R8349	R66 Illustrated Parts Catalog (Incl items 6 thru 8)	X	1
6	R8350	R66 Illustrated Parts Catalog – Binder	X	1
7	R8352	R66 Illustrated Parts Catalog – Tabs	X	1
8	R8351	R66 Illustrated Parts Catalog – Insert	O	1
9	R8656	Maintenance Record – Binder	X	1
10	R8650	Maintenance Record – Tabs	X	1
11	R8478	Maintenance Record – Insert (Incl item 12)	X	1
12	R8479	Maintenance Record – Component Cards (pack of 20)	X	1
13	R8344	R66 Pilots Operating Handbook (Incl items 14 thru 16)	X	1
14	R8342	R66 Pilots Operating Handbook – Binder	X	1
15	R7226	R66 Pilots Operating Handbook – Tabs	X	1
16	R8343	R66 Pilots Operating Handbook – Insert	O	1
17	R7042	Flight Training Guide	X	1
18	R7231	Flight Training Guide – Binder	X	1
19	R7232	Flight Training Guide – Tabs	X	1
20	R7227	Flight Training Guide – Insert	O	1

NOTES

Intentionally Blank

FIGURE AND INDEX NUMBER	PART NUMBER	DESCRIPTION	PARTS AVAIL	QTY PER ASSY
		SPECIAL TOOLS Special tools have been moved to the R66 MM Chapter 99.		

NOTES

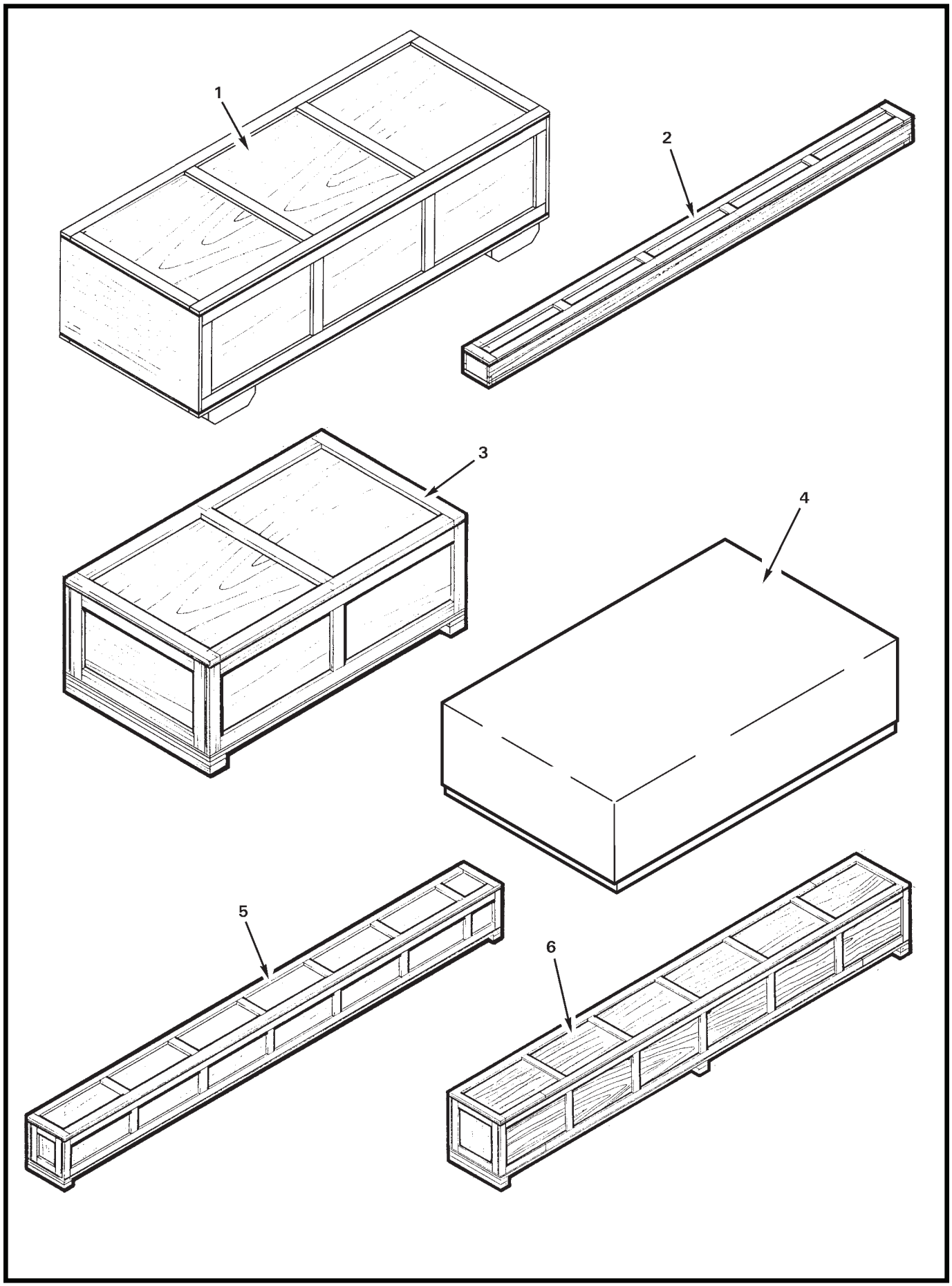

FIGURE 99-7 SHIPPING CRATES

FIGURE AND INDEX NUMBER	PART NUMBER	DESCRIPTION	PARTS AVAIL	QTY PER ASSY
		SHIPPING CRATES*		
99-7-1	R7982	Main Rotor Gearbox Crate (68 in. x 80 in. x 180 in.)	X	1
2	R5385	Push-Pull Tube/Tail Rotor Drive Shaft Crate	X	1
3	R5386	Cabin Door Crate (23 in. x 34 in. x 60 in.; holds [1] bubble or [2] regular doors)	X	1
4	R5170	Windshield Box (71 in. x 41 in. x 25 in.; cardboard. Holds up to four windshields.)	X	1
5	R5352	Main Rotor Blade Crate (21 in. x 17 in. x 206.50 in.)	X	1
6	R5388	Tailcone Crate (27 in. x 24 in. x 192 in.)	X	1

NOTES * Dimensions are approximate and expressed in inches.
Dimensions given describe height, width, and length.

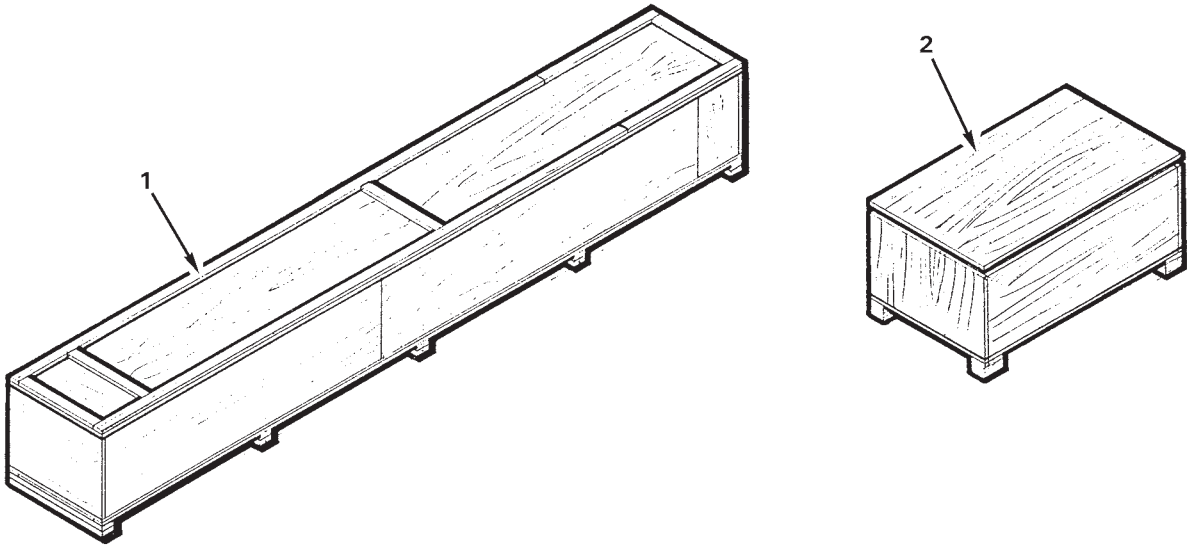

FIGURE 99-9 SHIPPING CRATES

FIGURE AND INDEX NUMBER	PART NUMBER	DESCRIPTION	PARTS AVAIL	QTY PER ASSY
		SHIPPING CRATES*		
99-9-1	R7418	Main Rotor Blade/Tailcone Crate (28 in. x 30 in. x 208 in.)	X	1
2	MT899-1	Tow Cart Crate (31 in. x 37 in. x 63.50 in.)	X	1

NOTES * Dimensions are approximate and expressed in inches.
Dimensions given describe height, width, and length.

Intentionally Blank

CHAPTER 100

REVISION LOG

Figure	*Title*	*Page*
—	Revision Log	100.1

Intentionally Blank

REVISION LOG

AUG 2026

The R66 Illustrated Parts Catalog (IPC) list of effective pages and effective dates are given below. If a previously issued page is not listed below, it is no longer an effective page and must be discarded. The issue or revision date is in bold at the top of each revision log page.

Please visit https://robinsonheli.com to verify the issue or revision date is current.

Page	Date	Page	Date	Page	Date
i	AUG 2026	6.7	SEP 2018	6.40	AUG 2026
ii	AUG 2026	6.8	SEP 2018	6.41	AUG 2026
iii	JAN 2023	6.9	SEP 2018	6.41A	AUG 2026
iv	JAN 2023	6.10	SEP 2018	6.41B	AUG 2026
v	JAN 2023	6.11	SEP 2018	6.42	SEP 2018
vi	JAN 2023	6.12	SEP 2018	6.43	SEP 2018
vii	MAR 2025	6.13	SEP 2018	6.44	SEP 2018
viii	MAR 2025	6.14	SEP 2018		
ix	AUG 2026	6.15	SEP 2018	8.i	SEP 2023
x	AUG 2026	6.16	SEP 2018	8.0	SEP 2023
xi	AUG 2026	6.17	SEP 2018	8.1	SEP 2023
xii	AUG 2026	6.18	SEP 2018	8.2	SEP 2023
xiii	JAN 2023	6.19	SEP 2018		
xiv	JAN 2023	6.20	SEP 2018	9.i	SEP 2020
xv	JAN 2023	6.21	SEP 2018	9.0	SEP 2020
xvi	JAN 2023	6.22	SEP 2018	9.1	SEP 2020
xvii	JAN 2023	6.23	SEP 2018	9.2	SEP 2020
xviii	JAN 2023	6.24	SEP 2018	9.3	SEP 2020
xix	JAN 2023	6.25	SEP 2018	9.3A	SEP 2020
xx	JAN 2023	6.26	SEP 2018	9.3B	SEP 2020
xxi	JAN 2023	6.27	SEP 2018	9.4	SEP 2020
xxii	JAN 2023	6.28	SEP 2018	9.5	SEP 2020
		6.29	SEP 2018	9.6	SEP 2020
6.i	AUG 2026	6.30	SEP 2018	9.7	SEP 2020
6.0	SEP 2018	6.31	SEP 2018	9.7A	SEP 2020
6.1	SEP 2018	6.32	SEP 2018	9.7B	SEP 2020
6.2	SEP 2018	6.33	SEP 2018	9.7C	SEP 2020
6.3	JAN 2023	6.34	SEP 2018	9.7D	SEP 2020
6.4	JAN 2023	6.35	SEP 2018	9.8	SEP 2020
6.5	JAN 2023	6.36	SEP 2018	9.9	SEP 2020
6.5A	JAN 2023	6.37	SEP 2018	9.10	SEP 2020
6.5B	JAN 2023	6.38	SEP 2018		
6.6	JAN 2023	6.39	SEP 2018	10.i	JAN 2023

REVISION LOG

AUG 2026

Page	Date	Page	Date	Page	Date
10.0	JAN 2023	11.23	JAN 2023	21.19	SEP 2018
10.1	JAN 2023	11.24	JAN 2023	21.20	SEP 2018
10.2	JAN 2023	12.i	SEP 2018	21.21	SEP 2018
10.3	25 OCT 2010	12.0	SEP 2018	21.22	SEP 2018
10.4	25 OCT 2010	12.1	SEP 2018	21.23	SEP 2012
10.5	SEP 2018	12.2	SEP 2018	21.24	SEP 2012
10.6	SEP 2018	12.3	SEP 2018	21.25	JAN 2023
10.7	MAY 2015	12.4	SEP 2018	21.26	JAN 2023
10.8	MAY 2015			21.27	JAN 2023
10.9	JAN 2023	18.i	25 OCT 2010	21.28	JAN 2023
10.10	JAN 2023	18.0	25 OCT 2010	21.29	SEP 2012
10.11	JAN 2023	18.1	25 OCT 2010	21.30	SEP 2012
10.12	JAN 2023	18.2	25 OCT 2010	21.31	SEP 2012
		18.3	25 OCT 2010	21.32	SEP 2012
11.i	JAN 2023	18.4	25 OCT 2010	21.33	SEP 2012
11.0	JAN 2023			21.34	SEP 2012
11.1	JAN 2023	21.i	JAN 2023	21.35	SEP 2018
11.2	JAN 2023	21.0	JAN 2023	21.36	SEP 2018
11.3	JAN 2023	21.1	JAN 2023	21.37	MAY 2015
11.4	JAN 2023	21.2	JAN 2023	21.38	MAY 2015
11.5	JAN 2023	21.3	JAN 2023	21.39	SEP 2018
11.6	JAN 2023	21.4	JAN 2023	21.40	SEP 2018
11.7	JAN 2023	21.5	SEP 2018		
11.8	JAN 2023	21.6	SEP 2018	22.i	AUG 2026
11.9	JAN 2023	21.7	SEP 2018	22.0	AUG 2026
11.10	JAN 2023	21.8	SEP 2018	22.1	AUG 2026
11.11	JAN 2023	21.9	JAN 2023	22.2	AUG 2026
11.12	JAN 2023	21.10	JAN 2023	22.3	AUG 2026
11.13	JAN 2023	21.11	JAN 2023	22.4	AUG 2026
11.14	JAN 2023	21.11A	JAN 2023	22.5	AUG 2026
11.15	JAN 2023	21.11B	JAN 2023	22.6	AUG 2026
11.16	JAN 2023	21.12	JAN 2023	22.7	AUG 2026
11.17	JAN 2023	21.13	JAN 2023	22.8	AUG 2026
11.18	JAN 2023	21.14	JAN 2023	22.9	AUG 2026
11.19	JAN 2023	21.15	JAN 2023	22.10	AUG 2026
11.20	JAN 2023	21.16	JAN 2023	22.11	AUG 2026
11.21	JAN 2023	21.17	SEP 2018	22.12	AUG 2026
11.22	JAN 2023	21.18	SEP 2018	22.13	AUG 2026

REVISION LOG

AUG 2026

Page	Date	Page	Date	Page	Date
22.14	AUG 2026	25.23	SEP 2018	28.10	SEP 2020
22.15	AUG 2026	25.24	SEP 2018	28.11	JAN 2023
22.16	AUG 2026	25.25	SEP 2018	28.12	JAN 2023
22.17	AUG 2026	25.26	SEP 2018	28.13	JAN 2023
22.18	AUG 2026	25.27	SEP 2018	28.14	JAN 2023
22.19	AUG 2026	25.28	SEP 2018	28.15	SEP 2020
22.20	AUG 2026	25.29	SEP 2018	28.16	SEP 2020
22.21	AUG 2026	25.30	SEP 2018	28.17	JAN 2023
22.22	AUG 2026	25.31	SEP 2018	28.18	JAN 2023
22.23	AUG 2026	25.32	SEP 2018	28.19	JAN 2023
22.24	AUG 2026	25.33	SEP 2018	28.20	JAN 2023
		25.34	SEP 2018	28.21	JAN 2023
25.i	AUG 2026	25.35	SEP 2018	28.22	JAN 2023
25.0	AUG 2026	25.36	SEP 2018	28.23	SEP 2020
25.1	JAN 2023	25.37	SEP 2018	28.24	SEP 2020
25.2	JAN 2023	25.38	SEP 2018	28.25	JAN 2023
25.3	SEP 2018	25.39	SEP 2018	28.26	JAN 2023
25.4	SEP 2018	25.40	SEP 2018	28.27	JAN 2023
25.5	SEP 2018	25.41	SEP 2018	28.28	JAN 2023
25.6	SEP 2018	25.42	SEP 2018	28.29	SEP 2020
25.7	MAY 2015	25.43	SEP 2018	28.30	SEP 2020
25.8	MAY 2015	25.44	SEP 2018	28.31	SEP 2020
25.9	SEP 2018	25.45	JAN 2023	28.32	SEP 2020
25.10	SEP 2018	25.46	JAN 2023	28.33	SEP 2020
25.11	SEP 2018	25.47	JAN 2023	28.34	SEP 2020
25.12	SEP 2018	25.48	JAN 2023	28.35	JAN 2023
25.13	JAN 2023			28.36	JAN 2023
25.14	JAN 2023	28.i	JAN 2023	28.37	AUG 2026
25.15	JAN 2023	28.0	JAN 2023	28.38	AUG 2026
25.16	JAN 2023	28.1	JAN 2023	28.39	JAN 2023
25.17	SEP 2020	28.2	JAN 2023	28.40	JAN 2023
25.18	SEP 2020	28.3	SEP 2018	28.41	JAN 2023
25.19	AUG 2026	28.4	SEP 2018	28.42	JAN 2023
25.19A	AUG 2026	28.5	SEP 2020	28.43	AUG 2026
25.19B	AUG 2026	28.6	SEP 2020	28.44	AUG 2026
25.20	AUG 2026	28.7	SEP 2020	28.45	AUG 2026
25.21	AUG 2026	28.8	SEP 2020	28.46	AUG 2026
25.22	AUG 2026	28.9	SEP 2020	28.47	JAN 2023

REVISION LOG

AUG 2026

Page	Date
28.48	JAN 2023
28.49	JAN 2023
28.50	JAN 2023
29.i	MAY 2015
29.0	MAY 2015
29.1	SEP 2018
29.2	SEP 2018
29.3	MAY 2015
29.4	MAY 2015
29.5	MAR 2025
29.6	MAR 2025
29.7	MAR 2025
29.8	MAR 2025
29.9	MAR 2025
29.10	MAR 2025
29.11	MAR 2025
29.12	MAR 2025
32.i	AUG 2026
32.0	SEP 2020
32.1	SEP 2020
32.2	SEP 2020
32.3	MAY 2015
32.4	MAY 2015
32.5	SEP 2018
32.6	SEP 2018
32.7	SEP 2018
32.8	SEP 2018
32.9	MAY 2015
32.10	MAY 2015
32.11	SEP 2018
32.12	SEP 2018
32.13	MAY 2015
32.14	MAY 2015
32.15	MAY 2015
32.16	MAY 2015
32.17	SEP 2020
32.18	AUG 2026
32.19	AUG 2026
32.20	AUG 2026
32.21	AUG 2026
32.22	AUG 2026
33.i	SEP 2023
33.0	SEP 2023
33.1	JUN 2024
33.2	JUN 2024
33.3	JUN 2024
33.4	JUN 2024
33.5	SEP 2020
33.6	SEP 2020
33.7	SEP 2020
33.8	SEP 2020
33.9	SEP 2018
33.10	SEP 2018
33.11	MAY 2015
33.12	MAY 2015
33.13	MAY 2015
33.14	MAY 2015
33.15	SEP 2018
33.16	SEP 2018
52.i	SEP 2023
52.0	SEP 2023
52.1	SEP 2018
52.2	SEP 2018
52.3	JAN 2023
52.4	JAN 2023
52.5	JAN 2023
52.5A	JAN 2023
52.5B	JAN 2023
52.6	JAN 2023
52.7	SEP 2012
52.8	SEP 2012
52.9	JAN 2023
52.10	JAN 2023
52.11	JAN 2023
52.12	JAN 2023
52.13	JAN 2023
52.14	JAN 2023
52.15	SEP 2020
52.16	SEP 2020
52.17	SEP 2023
52.18	SEP 2023
52.19	JAN 2023
52.20	JAN 2023
52.21	SEP 2023
52.22	SEP 2023
52.23	SEP 2023
52.24	SEP 2023
52.25	SEP 2023
52.26	SEP 2023
52.27	SEP 2023
52.28	SEP 2023
53.i	MAR 2025
53.0	MAR 2025
53.1	SEP 2023
53.1A	SEP 2023
53.1B	SEP 2023
53.2	SEP 2023
53.3	SEP 2018
53.4	SEP 2018
53.5	MAR 2025
53.6	MAR 2025
53.7	MAR 2025
53.8	MAR 2025
53.9	SEP 2012
53.10	SEP 2012
53.11	MAR 2025
53.12	MAR 2025
53.13	MAR 2025
53.13A	MAR 2025

REVISION LOG

AUG 2026

Page	Date	Page	Date	Page	Date
53.13B	MAR 2025	63.1	AUG 2026	67.i	AUG 2026
53.14	MAR 2025	63.2	MAR 2025	67.0	AUG 2026
53.15	MAR 2025	63.3	SEP 2018	67.1	JAN 2023
53.16	MAR 2025	63.4	SEP 2018	67.2	JAN 2023
53.17	JUN 2024	63.5	MAR 2025	67.3	MAR 2025
53.18	JUN 2024	63.6	MAR 2025	67.4	MAR 2025
53.19	JUN 2024	63.7	SEP 2018	67.5	MAR 2025
53.20	JUN 2024	63.8	SEP 2018	67.6	MAR 2025
53.21	JUN 2024	63.9	SEP 2018	67.7	MAY 2015
53.22	JUN 2024	63.10	SEP 2018	67.8	MAY 2015
53.23	JUN 2024	63.11	SEP 2018	67.9	SEP 2018
53.23A	JUN 2024	63.12	SEP 2018	67.10	SEP 2018
53.23B	JUN 2024	63.13	JAN 2023	67.11	SEP 2018
53.24	JUN 2024	63.14	JAN 2023	67.12	SEP 2018
53.25	MAR 2025	63.15	JAN 2023	67.13	MAY 2015
53.26	MAR 2025	63.16	JAN 2023	67.14	MAY 2015
53.27	JUN 2024			67.15	MAY 2015
53.28	JUN 2024	64.i	JAN 2023	67.16	MAY 2015
53.29	MAR 2025	64.0	JAN 2023	67.17	MAY 2015
53.30	MAR 2025	64.1	JAN 2023	67.18	MAY 2015
53.31	JUN 2024	64.2	JAN 2023	67.19	MAY 2015
53.32	JUN 2024			67.20	MAY 2015
53.33	JUN 2024	65.i	SEP 2018	67.21	MAY 2015
53.34	JUN 2024	65.0	SEP 2018	67.22	MAY 2015
53.35	SEP 2023	65.1	JAN 2023	67.23	MAR 2025
53.36	SEP 2023	65.2	JAN 2023	67.24	MAR 2025
53.37	SEP 2023	65.3	JAN 2023	67.25	MAR 2025
53.38	SEP 2023	65.4	JAN 2023	67.26	MAR 2025
		65.5	JAN 2023	67.27	SEP 2023
62.i	SEP 2020	65.6	JAN 2023	67.28	SEP 2023
62.0	SEP 2020	65.7	JUN 2024	67.29	SEP 2023
62.1	JAN 2023	65.8	JUN 2024	67.29A	SEP 2023
62.2	JAN 2023	65.9	JUN 2024	67.29B	MAR 2025
62.3	SEP 2020	65.10	JUN 2024	67.30	MAR 2025
62.4	SEP 2020	65.11	MAY 2015	67.31	MAR 2025
		65.12	MAY 2015	67.32	MAR 2025
63.i	AUG 2026	65.13	SEP 2018	67.33	MAR 2025
63.0	AUG 2026	65.14	SEP 2018	67.33A	MAR 2025

REVISION LOG

AUG 2026

Page	Date	Page	Date	Page	Date
67.33B	JAN 2023	71.10	SEP 2018	79.1	SEP 2018
67.34	JAN 2023	71.11	SEP 2018	79.2	SEP 2018
67.35	SEP 2018	71.12	SEP 2018	79.3	JAN 2023
67.36	SEP 2018	71.13	SEP 2018	79.4	JAN 2023
67.37	MAY 2015	71.14	SEP 2018	79.5	JAN 2023
67.38	MAY 2015	71.15	SEP 2018	79.6	JAN 2023
67.39	AUG 2026	71.16	SEP 2018	79.7	SEP 2020
67.40	AUG 2026	71.17	SEP 2020	79.8	SEP 2020
67.41	AUG 2026	71.18	SEP 2020	79.9	SEP 2020
67.42	AUG 2026	71.19	SEP 2020	79.10	SEP 2020
67.43	AUG 2026	71.20	SEP 2020		
67.43A	AUG 2026	71.21	SEP 2018	90.i	SEP 2020
67.43B	AUG 2026	71.22	SEP 2018	90.ii	SEP 2020
67.43C	AUG 2026	71.23	SEP 2020	90.iii	SEP 2020
67.43D	AUG 2026	71.24	SEP 2020	90.iv	SEP 2020
67.44	AUG 2026	71.25	SEP 2020	90.v	SEP 2020
67.45	JAN 2023	71.26	SEP 2020	90.vi	SEP 2020
67.46	JAN 2023	71.27	SEP 2020	90.vii	SEP 2020
67.47	JAN 2023	71.28	SEP 2020	90.0	SEP 2020
67.48	JAN 2023			90.1	SEP 2020
		75.i	SEP 2012	90.2	SEP 2020
71.i	JAN 2023	75.0	SEP 2012	90.3	SEP 2020
71.0	JAN 2023	75.1	SEP 2012	90.4	SEP 2020
71.1	JAN 2023	75.2	SEP 2012	90.5	SEP 2020
71.2	JAN 2023			90.5A	SEP 2020
71.3	JAN 2023	76.i	JAN 2023	90.5B	SEP 2020
71.4	JAN 2023	76.0	JAN 2023	90.5C	SEP 2020
71.5	JAN 2023	76.1	JAN 2023	90.5D	SEP 2020
71.5A	JAN 2023	76.2	JAN 2023	90.6	SEP 2020
71.5B	JAN 2023	76.3	SEP 2012	90.7	SEP 2020
71.6	JAN 2023	76.4	SEP 2012	90.7A	SEP 2020
71.7	JAN 2023	76.5	SEP 2018	90.7B	SEP 2020
71.7A	JAN 2023	76.6	SEP 2018	90.7C	SEP 2020
71.7B	JAN 2023	76.7	SEP 2012	90.7D	SEP 2020
71.7C	JAN 2023	76.8	SEP 2012	90.8	SEP 2020
71.7D	JAN 2023			90.9	SEP 2018
71.8	JAN 2023	79.i	SEP 2012	90.10	SEP 2018
71.9	SEP 2018	79.0	SEP 2012	90.11	SEP 2018

REVISION LOG

AUG 2026

Page	Date	Page	Date	Page	Date
90.12	SEP 2018	90.45A	SEP 2020	90.72	SEP 2020
90.13	SEP 2018	90.45B	SEP 2020	90.73	SEP 2020
90.14	SEP 2018	90.45C	SEP 2020	90.74	SEP 2020
90.15	SEP 2018	90.45D	SEP 2020	90.75	SEP 2018
90.16	SEP 2018	90.46	SEP 2020	90.76	SEP 2018
90.17	SEP 2018	90.47	SEP 2020	90.77	SEP 2020
90.18	SEP 2018	90.48	SEP 2020	90.78	SEP 2020
90.19	SEP 2018	90.49	SEP 2020	90.79	SEP 2020
90.20	SEP 2018	90.50	SEP 2020	90.80	SEP 2020
90.21	SEP 2018	90.51	SEP 2020		
90.22	SEP 2018	90.52	SEP 2020	92.i	SEP 2018
90.23	SEP 2020	90.53	SEP 2020	92.ii	SEP 2018
90.24	SEP 2020	90.53A	SEP 2020	92.iii	SEP 2018
90.25	SEP 2018	90.53B	SEP 2020	92.iv	SEP 2018
90.26	SEP 2018	90.53C	SEP 2020	92.v	SEP 2018
90.27	SEP 2018	90.53D	SEP 2020	92.vi	SEP 2018
90.28	SEP 2018	90.54	SEP 2020	92.vii	SEP 2018
90.29	SEP 2018	90.55	SEP 2018	92.0	SEP 2018
90.30	SEP 2018	90.56	SEP 2018	92.1	SEP 2018
90.31	SEP 2018	90.57	SEP 2018	92.2	SEP 2018
90.32	SEP 2018	90.58	SEP 2018	92.3	SEP 2018
90.33	SEP 2018	90.59	SEP 2020	92.4	SEP 2018
90.34	SEP 2018	90.60	SEP 2020	92.5	SEP 2018
90.35	SEP 2018	90.61	SEP 2020	92.6	SEP 2018
90.36	SEP 2018	90.62	SEP 2020	92.7	SEP 2018
90.37	SEP 2018	90.63	SEP 2020	92.8	SEP 2018
90.38	SEP 2018	90.64	SEP 2020	92.9	SEP 2018
90.39	SEP 2020	90.65	SEP 2020	92.10	SEP 2018
90.39A	SEP 2020	90.66	SEP 2020	92.11	SEP 2018
90.39B	SEP 2020	90.67	SEP 2020	92.12	SEP 2018
90.39C	SEP 2020	90.68	SEP 2020	92.13	SEP 2018
90.39D	SEP 2020	90.69	SEP 2018	92.14	SEP 2018
90.40	SEP 2020	90.70	SEP 2018	92.15	SEP 2018
90.41	SEP 2020	90.71	SEP 2020	92.16	SEP 2018
90.42	SEP 2020	90.71A	SEP 2020	92.17	SEP 2018
90.43	SEP 2020	90.71B	SEP 2020	92.18	SEP 2018
90.44	SEP 2020	90.71C	SEP 2020	92.19	SEP 2018
90.45	SEP 2020	90.71D	SEP 2020	92.20	SEP 2018

REVISION LOG

AUG 2026

Page	Date	Page	Date	Page	Date
92.21	SEP 2018	92.59	SEP 2018	95.10	SEP 2020
92.22	SEP 2018	92.60	SEP 2018	95.11	SEP 2018
92.23	SEP 2018	92.61	SEP 2020	95.12	SEP 2018
92.24	SEP 2018	92.62	SEP 2020	95.13	SEP 2018
92.25	SEP 2018	92.63	SEP 2018	95.14	SEP 2018
92.26	SEP 2018	92.64	SEP 2018	95.15	SEP 2018
92.27	SEP 2018	92.65	SEP 2020	95.16	SEP 2018
92.28	SEP 2018	92.66	SEP 2020	95.17	SEP 2018
92.29	SEP 2018	92.67	SEP 2018	95.18	SEP 2018
92.30	SEP 2018	92.68	SEP 2018	95.19	SEP 2018
92.31	SEP 2018	92.69	SEP 2018	95.20	SEP 2018
92.32	SEP 2018	92.70	SEP 2018	95.21	SEP 2018
92.33	SEP 2018	92.71	SEP 2018	95.22	SEP 2018
92.34	SEP 2018	92.72	SEP 2018	95.23	SEP 2018
92.35	SEP 2018	92.73	SEP 2018	95.24	SEP 2018
92.36	SEP 2018	92.74	SEP 2018	95.25	SEP 2020
92.37	SEP 2018	92.75	SEP 2018	95.26	SEP 2020
92.38	SEP 2018	92.76	SEP 2018	95.27	SEP 2020
92.39	SEP 2018	92.77	SEP 2018	95.28	SEP 2020
92.40	SEP 2018	92.78	SEP 2018	95.29	SEP 2020
92.41	SEP 2018	92.79	SEP 2018	95.30	SEP 2020
92.42	SEP 2018	92.80	SEP 2018	95.31	SEP 2018
92.43	SEP 2018	92.81	SEP 2018	95.32	SEP 2018
92.44	SEP 2018	92.82	SEP 2018	95.33	SEP 2018
92.45	SEP 2018			95.34	SEP 2018
92.46	SEP 2018	95.i	SEP 2020	95.35	SEP 2018
92.47	SEP 2018	95.0	SEP 2020	95.36	SEP 2018
92.48	SEP 2018	95.1	SEP 2020	95.37	SEP 2018
92.49	SEP 2018	95.2	SEP 2020	95.38	SEP 2018
92.50	SEP 2018	95.3	SEP 2020	95.39	SEP 2018
92.51	SEP 2018	95.4	SEP 2020	95.40	SEP 2018
92.52	SEP 2018	95.5	SEP 2020	95.41	SEP 2018
92.53	SEP 2020	95.6	SEP 2020	95.42	SEP 2018
92.54	SEP 2020	95.7	SEP 2020	95.43	SEP 2018
92.55	SEP 2018	95.8	SEP 2020	95.44	SEP 2018
92.56	SEP 2018	95.9	SEP 2020	95.45	SEP 2018
92.57	SEP 2018	95.9A	SEP 2020	95.46	SEP 2018
92.58	SEP 2018	95.9B	SEP 2020	95.47	SEP 2018

REVISION LOG

AUG 2026

Page	Date	Page	Date	Page	Date
95.48	SEP 2018	96.27	SEP 2018	97.11A	AUG 2026
95.49	SEP 2018	96.28	SEP 2018	97.11B	AUG 2026
95.50	SEP 2018	96.29	SEP 2020	97.11C	AUG 2026
95.51	SEP 2018	96.30	SEP 2020	97.11D	AUG 2026
95.52	SEP 2018	96.31	SEP 2018	97.12	SEP 2018
		96.32	SEP 2018	97.13	MAY 2015
96.i	MAR 2025	96.33	SEP 2018	97.13A	AUG 2026
96.0	MAR 2025	96.34	SEP 2018	97.13B	AUG 2026
96.1	JAN 2023	96.35	SEP 2018	97.14	MAY 2015
96.2	JAN 2023	96.36	SEP 2018	97.15	MAY 2015
96.3	JAN 2023	96.37	SEP 2018	97.16	MAY 2015
96.3A	JAN 2023	96.38	SEP 2018	97.17	MAY 2015
96.3B	JAN 2023	96.39	SEP 2018	97.18	AUG 2026
96.4	JAN 2023	96.40	SEP 2018	97.19	AUG 2026
96.5	JAN 2023	96.41	SEP 2018	97.19A	AUG 2026
96.6	JAN 2023	96.42	SEP 2018	97.19B	AUG 2026
96.7	JAN 2023	96.43	MAR 2025	97.20	MAY 2015
96.8	JAN 2023	96.44	MAR 2025	97.21	MAY 2015
96.9	JAN 2023	96.45	MAR 2025	97.21A	AUG 2026
96.9A	JAN 2023	96.46	MAR 2025	97.21B	AUG 2026
96.9B	JAN 2023	96.47	MAR 2025	97.21C	AUG 2026
96.10	JAN 2023	96.48	MAR 2025	97.21D	AUG 2026
96.11	AUG 2026	96.49	MAR 2025	97.22	MAY 2015
96.12	AUG 2026	96.50	MAR 2025	97.23	SEP 2018
96.13	SEP 2018			97.24	SEP 2018
96.14	SEP 2018	97.i	AUG 2026	97.25	SEP 2018
96.15	SEP 2020	97.0	MAY 2015	97.26	SEP 2018
96.16	SEP 2020	97.1	MAY 2015	97.27	SEP 2018
96.17	SEP 2020	97.2	MAY 2015	97.28	SEP 2018
96.18	SEP 2020	97.3	MAY 2015	97.29	SEP 2018
96.19	MAY 2015	97.4	MAY 2015	97.30	SEP 2018
96.20	MAY 2015	97.5	MAY 2015	97.31	SEP 2018
96.21	SEP 2018	97.6	MAY 2015	97.32	SEP 2018
96.22	SEP 2018	97.7	MAY 2015	97.33	SEP 2018
96.23	SEP 2018	97.8	MAY 2015	97.34	SEP 2018
96.24	SEP 2018	97.9	MAY 2015	97.35	SEP 2018
96.25	SEP 2018	97.10	MAY 2015	97.36	SEP 2018
96.26	SEP 2018	97.11	SEP 2018	97.37	SEP 2018

REVISION LOG

AUG 2026

Page	Date
97.38	SEP 2018
97.39	SEP 2018
97.40	SEP 2018
97.41	SEP 2018
97.42	SEP 2018
97.43	SEP 2018
97.44	SEP 2018
97.45	SEP 2018
97.46	SEP 2018
97.47	SEP 2018
97.48	SEP 2018
97.49	SEP 2018
97.50	SEP 2018
97.51	SEP 2018
97.52	SEP 2018
97.53	SEP 2018
97.54	SEP 2018
97.55	SEP 2018
97.56	SEP 2018
97.57	JAN 2023
97.58	JAN 2023
97.59	JAN 2023
97.60	JAN 2023
97.61	SEP 2018
97.62	SEP 2018
97.63	SEP 2018
97.64	SEP 2018
97.65	SEP 2018
97.66	SEP 2018
97.67	SEP 2018
97.68	SEP 2018
97.69	SEP 2018
97.70	SEP 2018
99.i	SEP 2018
99.0	SEP 2018
99.1	SEP 2018
99.2	SEP 2018
99.3	JAN 2023
99.4	JAN 2023
99.5	SEP 2018
99.6	SEP 2018
99.7	SEP 2018
99.8	SEP 2018
99.9	SEP 2018
99.10	SEP 2018
100.i	SEP 2020
100.0	SEP 2020
100.1	AUG 2026
100.2	AUG 2026
100.3	AUG 2026
100.4	AUG 2026
100.5	AUG 2026
100.6	AUG 2026
100.7	AUG 2026
100.8	AUG 2026
100.9	AUG 2026
100.10	AUG 2026